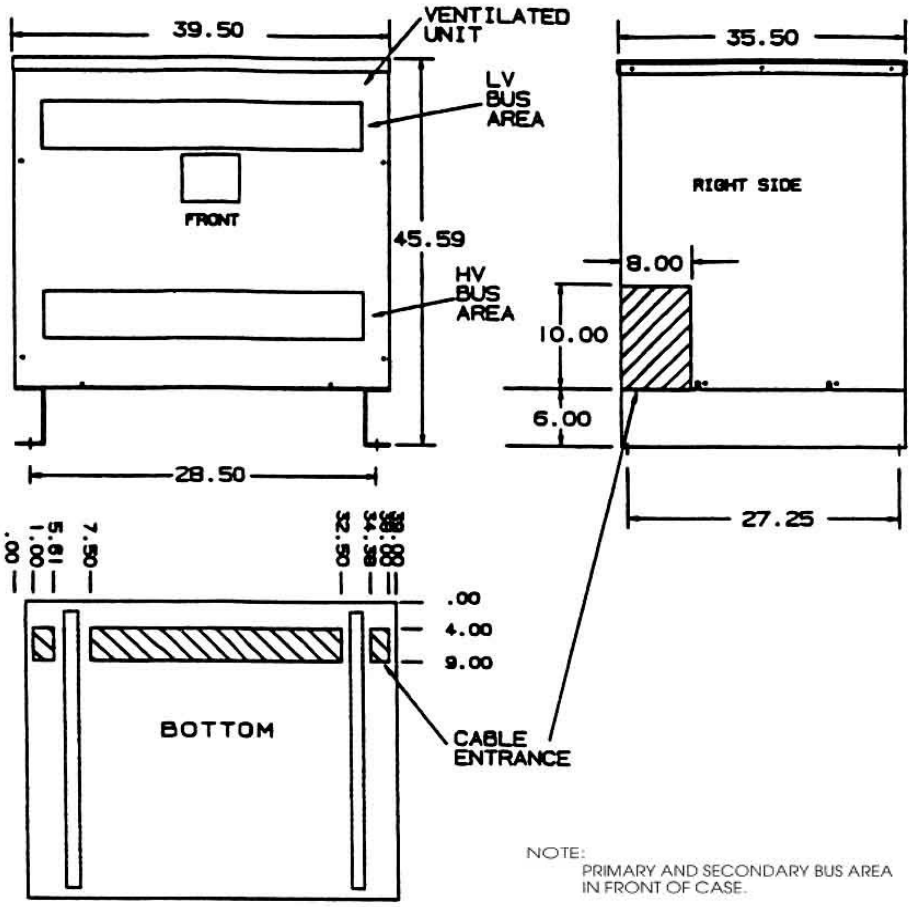

NOTE:
PRIMARY AND SECONDARY BUS AREA IN FRONT OF CASE.

KEY: DENOTES CONDUIT AREAS

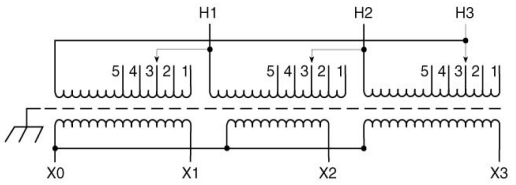

Primary Volts	%	Connect Leads to Tap No.
604	105	1
589	102.5	2
575	100	3
561	97.5	4
546	95	5
Secondary Volts		
460		X1, X2, X3
266 1 phase		X1 & X0 X2 & X0 X3 & X0

KVA	CATALOG NUMBER	VOLTAGE		WEATHER SHIELD	WEIGHT	PHASE	FREQ.
		HIGH	LOW				
330	**DTHB-0330-4S**	575Δ	460Y/266	WS-A-5	1510 Lbs	3ϕ	60 Hz

TYPICAL PERFORMANCE DATA

Winding Rise	150°C
Insulation	220°C
Sound Level	60 dB

Windings	AL
Standards:	UL/CSA

Impedance	5.90%

Typical Efficiency	98.68%
No Load Losses	968W
Full Load Losses	7,258W

					A	PRINTS TO	CONTROL 7	A

Revisions

Acme Electric®

Type No.	
DRAWN	
CHK.	
MAT'L	APP.
FINISH	
SCALE	
	SHEET