Browning®

Mounting Instructions for Split Taper Bushings in Split Taper Bushed Products

Power Transmission Solutions
Regal Beloit America, Inc.
7120 New Buffington Road
Florence, KY 41042
Application Engineering: 800 626 2093
www.RegalPTS.com

FORM
4013E
Revised
September 2015

⚠ WARNING

- Read and follow all instructions carefully.
- Disconnect and lock-out power before installation and maintenance. Working on or near energized equipment can result in severe injury or death.
- Do not operate equipment without guards in place. Exposed equipment can result in severe injury or death.

⚠ CAUTION

- Periodic inspections should be performed. Failure to perform proper maintenance can result in premature product failure and personal injury.

Split Taper Bushing

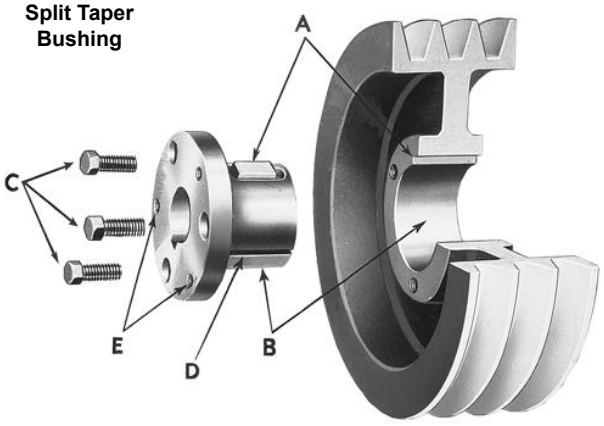

Browning® Split Taper Bushed Product (Gripbelt® Sheave Shown)

A. External key, except G, H and idler bushings.
B. Bushing barrel and product bore are tapered.
C. Bushing cap screws.
D. Bushing barrel is split (except idler bushings).
E. Removal holes are threaded, installation holes are not.

Before Installation:

1. Make sure the shaft, bushing barrel & bore, Browning split taper bushed product bore, keys and keyways are free of burrs, paint, etc. For idler bushings, make sure the bushing barrel and Browning split taper bushed product bore are free of burrs, paint, etc.

2. For proper operation, make sure the shaft size is within the size limits shown in Table 1. Some applications may benefit from tighter shaft tolerances.

CAUTION: Mounting a Browning split taper bushing on a shaft smaller than the size limits shown in Table 1 may result in a faulty assembly. The assembly may come off the shaft or undesirable assembly runout may result.

Installation:

1. For light weight products, the bushing may first be loosely installed into the Browning split taper bored product, hereafter referred to as “product”, and then the assembly slid onto the shaft (Illustration 1 A and B). For heavier products, it is usually easier to either first slide the bushing onto the shaft and then slide the product onto the bushing (Illustration 2A), or first position the product over the shaft, next slide the bushing onto the shaft, and then pull the product onto the bushing (Illustration 2B). The “light weight products” method is common, however if the bushing barrel has collapsed, it must be wedged open (described below), and the “heavy product” procedure may be easier.

Heavier product may require a hoist or other means of holding the product in position until the bushing is installed into the product. When mounting on a vertical shaft, make sure the bushing and the product do not drop during installation.

2. It may be necessary to slightly wedge open the saw slot on some bushings in order to start the bore and position the bushing onto the shaft. A narrow edged regular screw driver may be used.

CAUTION: Excessive wedging forces in bushing saw slot may damage or break bushing. Avoid.

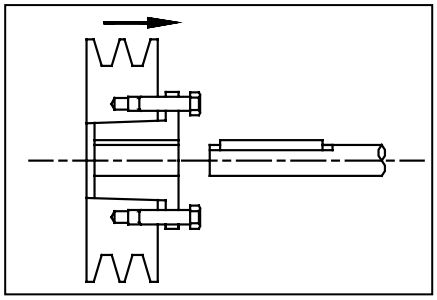

Illustration 1A
S/T Ass’y., Flange Inboard

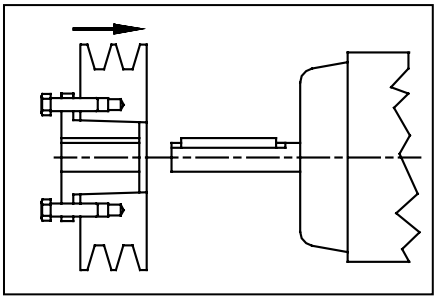

Illustration 1B
S/T Ass’y., Flange Outboard

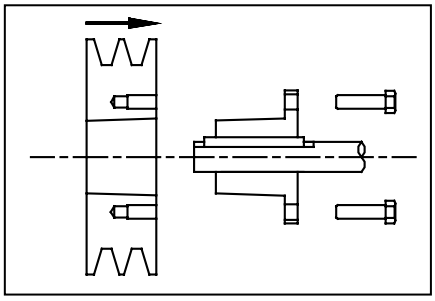

Illustration 2A
S/T Components, Flange Inboard

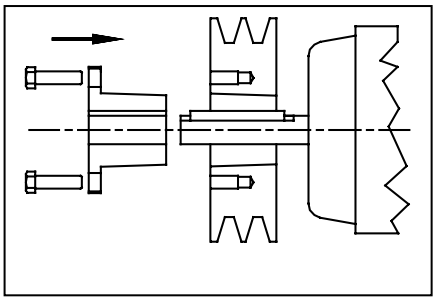

Illustration 2A
S/T Components, Flange Outboard

3. Align the shaft keyseat with the bushing bore keyway and install the key. Make sure the key runs the entire length of the bushing bore.

For Type 2 bushings except G and H, a key, which protrudes through the bushing and into the product, is provided. Some Type 1 bushings with shallow keyways are also supplied with shaft keys. For proper operation use the key(s) supplied with the bushing. No keys are required for Browning idler bushings.

4. Position the product so the keyway in the bore of the product is aligned with the external (barrel) key in the bushing (G, H and idler bushings do not have an external key). Whether the bushing has an external key or not, the threaded holes in the product must be aligned with the non-threaded holes in the bushing flange. Insert the capscrews through the non-threaded holes in the bushing flange and thread them by hand into the product three or four turns.

5. Position the bushing - product assembly axially on the shaft such that it is aligned with its running mate. Be sure to check for adequate clearance between the assembly and other nearby components if applicable. If the bushing has a set screw over the keyway, tighten it to the torque value in Table 2.

CAUTION: Tightening the set screw to a torque higher than shown in Table 2 may lead to bushing damage or breakage. Avoid.

6. If the bushing - product assembly is not between the shaft bearings, then locating the assembly closer to a bearing will reduce the load and increase the life of both bearings. Check for adequate clearance as stated in Step 11.

7. Using a torque wrench and appropriate socket, tighten the capscrews sequentially until each is tightened to the torque shown in Table 2. When the capscrew torque is at or near recommended torque, make at lease two more sequential rounds to assure all cap screws are at the Table 2 capscrew torque value.

CAUTION: Tightening the cap screw to a torque higher than shown in Table 2 may lead to product failure. Avoid.

8. If capscrews were provided with the product, use them instead of the ones provided with the bushing.

CAUTION: Failure to use the cap screws that came with the product may lead to an unsafe assembly. Avoid.

9. Since tightening the capscrews may affect the axial position of the product, confirm that it is still properly aligned with its running mate. If not, determine how much the assembly must be moved to be in proper alignment.

10. If axial adjustment is required, (following Removal procedure), reposition the assembly, and repeat step 11.

11. Check installation gap - There must be a gap between the bushing flange and the product face. If there is no gap between them, disassemble the parts (following Removal procedure) and determine the reason(s) for the faulty assembly.

Removal:

1. Heavier product may require a hoist or other means of supporting the product during the removal procedure. When removing from a vertical shaft, make sure the bushing and product do not drop during removal.

2. Remove all capscrews sequentially. If the bushing has a keyway setscrew, loosen it.

3. Insert capscrews in all threaded bushing flange holes. Tighten the cap screws against the (hub) face of the product until the screw force releases the product from the bushing.

4. Remove the bushing and product from the shaft using appropriate means.

Table 1
Shaft Size Limits for Browning Split Taper Bushings

Shaft Size Range (IN)		Lower Shaft Size Limit (IN)	Shaft Size Range (MM)		Lower Shaft Size Limit (MM)
Above	Through		Above	Through	
–	1 1/2	-0.003	—	38.1	-0.076
1 1/2	2 1/2	-0.004	38.1	63.5	-0.102
2 1/2	4	-0.005	63.5	101.6	-0.127
4	6	-0.006	101.6	152.4	-0.152
6	8	-0.007	152.4	203.2	-0.178
8	9	-0.008	203.2	228.6	-0.203
9	—	-0.009	228.6	—	-0.229

Note: Upper limit is + 0 whether units are inches or millimeters.

Table 2
Tightening Torques

Bushing	SAE Grade 5 CapScrew		CapScrew Torque			Set Screw Size	Set Screw Torque		
	No.	Size	(InLbs)	(FtLbs)	(NM)		(InLbs)	(FtLbs)	(NM)
G; H	2	1/4 -20NC	95	8	10.7	—	—	—	—
P; B	3	5/16 -18NC	192	16	21.7	—	—	—	—
Q	3	3/8 -16NC	348	29	39.3	5/16 -18NC*	165*	13.8*	18.6*
R	3	3/8 -16NC	348	29	39.3	5/16 -18NC	165	13.8	18.6
S	3	1/2 -13NC	840	70	94.9	3/8 -16NC	290	24.2	32.8
U	3	5/8 -11NC	1680	140	189.8	3/8 -16NC	290	24.2	32.8
W	4	3/4 -10NC	3000	250	339	1/2 -13NC*	620*	51.7*	70.1*
YO	4	1 -8NC	7200	600	813.5	1/2 -13NC*	620*	51.7*	70.1*

(N-M) = Newton Meters
*Q3 Type 2 bushings only; W1, W2 and YO Type 1 bushings only.
Idler bushings have no set screws.

Have questions? Contact Application Engineering at 1-800-626-2093.

A Regal Brand

REGAL

www.regalbeloit.com

Browning and GRIPBELT are trademarks of Regal Beloit Corporation or one of its affiliated companies.
©2015 Regal Beloit Corporation, All Rights Reserved. MCIM15061E • Form 4013E • Printed in USA