Dimensions

Key	Labelless Non-Metallic 30A inch (mm)	Labelless Non-Metallic 60A/100A inch (mm)	Stainless Steel, Square Top 30A inch (mm)	Stainless Steel, Square Top 60A/100A inch (mm)	Stainless Steel, Sloped Top 30A inch (mm)	Stainless Steel, Sloped Top 60A/100A inch (mm)
A	6.00 (152)	7.75 (197)	—	—	—	—
B	5.12 (130)	6.87 (175)	4.87 (124)	7.30 (185)	5.41 (137)	7.66 (195)
C	4.12 (105)	4.75 (121)	3.30 (84)	5.50 (140)	4.50 (114)	6.45 (164)
D	6.62 (168)	8.00 (203)	—	—	—	—
E	7.62 (194)	9.95 (253)	7.05 (179)	10.30 (262)	8.60 (218)	11.41 (290)
F	8.50 (216)	11.00 (279)	8.38 (213)	11.63 (296)	8.22 (209)	11.17 (284)
G	4.12 (105)	5.94 (151)	5.39 (137)	5.93 (151)	4.92 (125)	6.10 (155)

Horsepower Ratings

Voltage	30A	30A*	60A	100A
1Ø 120V AC	1	1	7.5	7.5
1Ø 200–240V AC	3	2.5	15	15
1Ø 480V AC	5	5	30	30
3Ø 200–240V AC	7.5	5	30	30
3Ø 480V AC	15	10	50	50
3Ø 600V AC	15	10	50	50

*Note: *HBLDS33ACNK.*

Non-Metallic

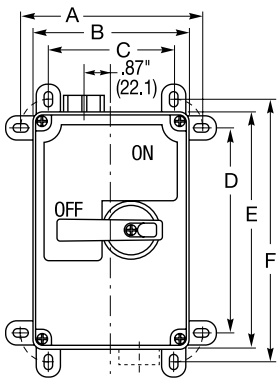

Stainless Steel, Square Top

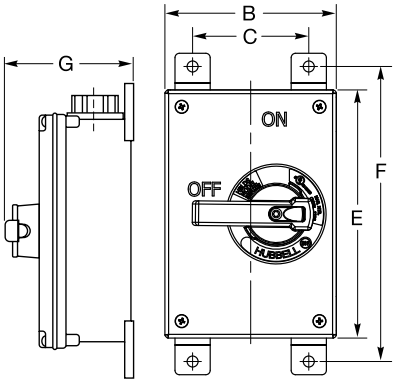

Stainless Steel, Sloped Top

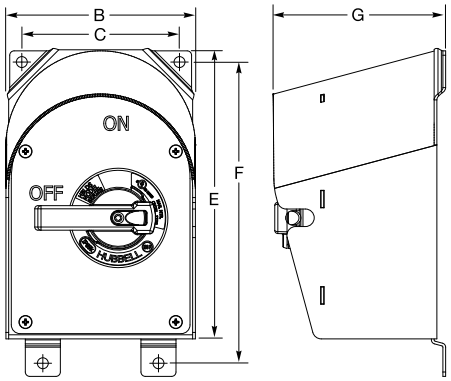

Circuit-Lock® Unfused Disconnect Switches

Specifications	
Moisture Resistance	Indoor and Outdoor – Type 4X (Wash down, Corrosion resistant); Indoor – 30, 60A and 100A Type 12 (Dust-tight, Falling Dirt, Noncorrosive Liquids).
Flammability	UL94-5VA and V0 Classification.
Operating Temperature	Maximum Continuous 75°C; Minimum Continuous -40°C without impact.
UV Resistance	All materials are UV stabilized.
Dielectric Voltage	Withstands 3000V AC minimum.
Max. Working Voltage	600V AC RMS.
Current Interrupting	Certified for current interrupting at full rated current and voltage.
Short Circuit Current Ratings (SCCR): (Motor Disconnect)	• 30/60/100A: Suitable for use on a circuit capable of delivering not more than 10kA RMS symmetrical, 600V AC max. • 30A: Suitable for use on a circuit capable of delivering not more than 65kA RMS symmetrical, 600V AC max. when protected by Class J fuses rated 30A max. • 60/100A: Suitable for use on a circuit capable of delivering not more than 65kA RMS symmetrical, 600V AC max. when protected by Class J fuses rated 100A max.
Terminal Identification	In accordance with UL, CSA and international conventions.
Product Identification	Identification and ratings are part of external label.
Mounting	Non-Metallic - External fully adjustable feet. Stainless Steel - Feet are fixed.
Impact Resistance	In accordance with UL 746C.

Materials		
Part	Non-Metallic	Stainless Steel
Base	PBT	#14 Gauge Type 304 Stainless Steel
Top	PBT	#14 Gauge Type 304 Stainless Steel
Handle	PBT	PBT
Conduit Hub	Zinc 30A Unfused - ¾ in. Zinc 60/100A Unfused - 1¼ in.	Zinc 30A - ¾ in. Zinc 60/100A - 1¼ in.
Enclosure Gasket	Neoprene	Neoprene
Shaft (Unfused)	PBT	PBT
Shaft Seal	Molded Neoprene	Molded Neoprene
Frame	Galvanized Steel	N/A
Enclosure Screws	Stainless Steel 300 Series	Stainless Steel

Dimensions in Inches (mm)