

TOP VIEW

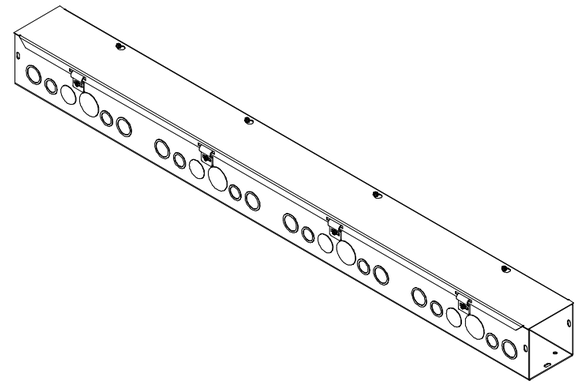

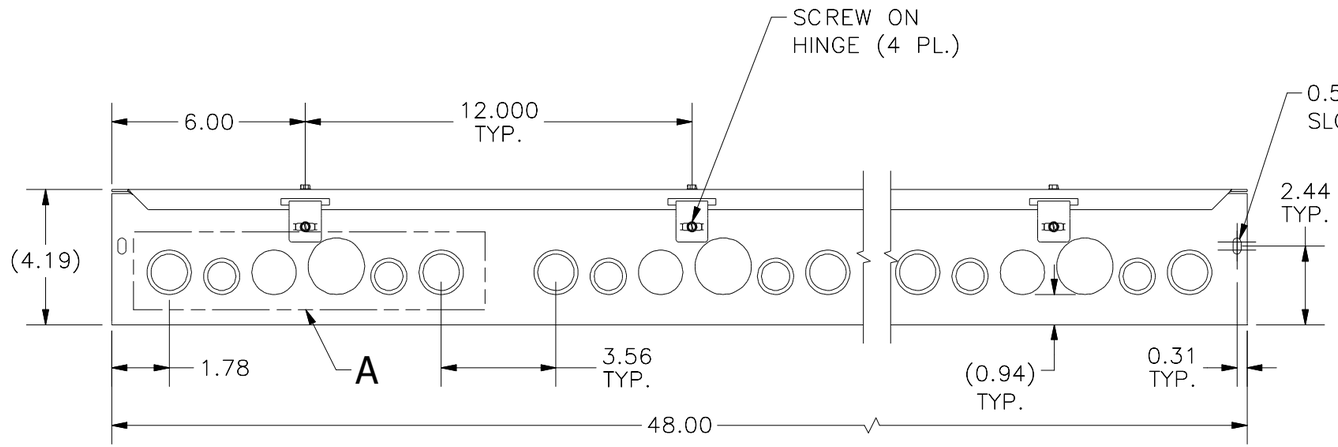

FRONT VIEW

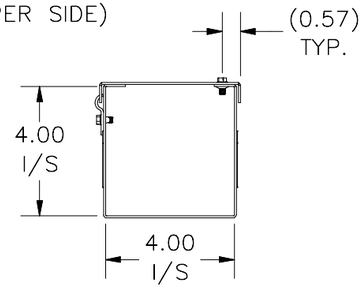

RIGHT VIEW

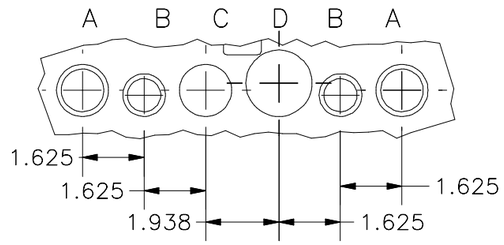

DETAIL A (4 PL. PER SIDE)
K.O. PATTERN DESCRIPTION

A) 3/4"-1" CONCENTRIC KO (2 PL)
B) 1/2"-3/4" CONCENTRIC KO (2 PL)
C) 1" SOLID KO (1 PL)
D) 1 1/4" SOLID KO (1 PL)

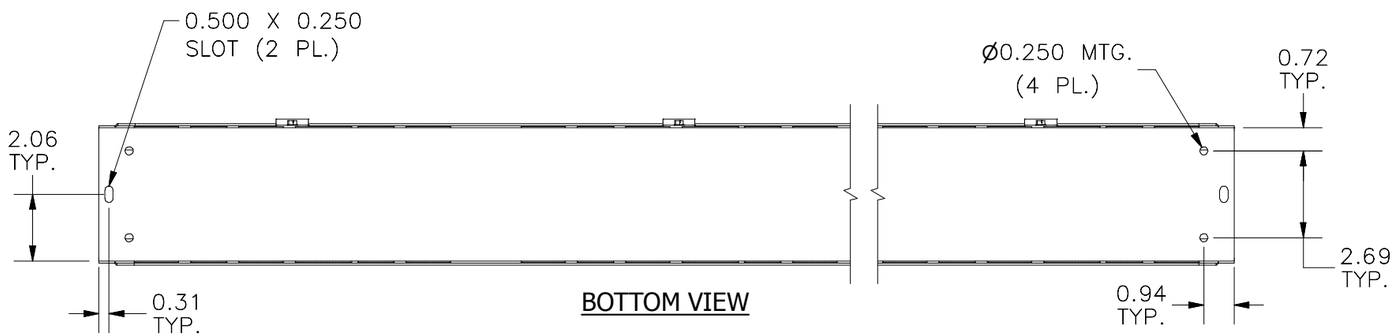

BOTTOM VIEW

PART#: HS444
(DATA SUBJECT TO CHANGE WITHOUT NOTICE)

THIS DRAWING IS PROPERTY OF HUBBELL INC. WIEGMANN
ALL INFORMATION IS PROPRIETARY AND NOT TO BE DUPLICATED