


TOP VIEW

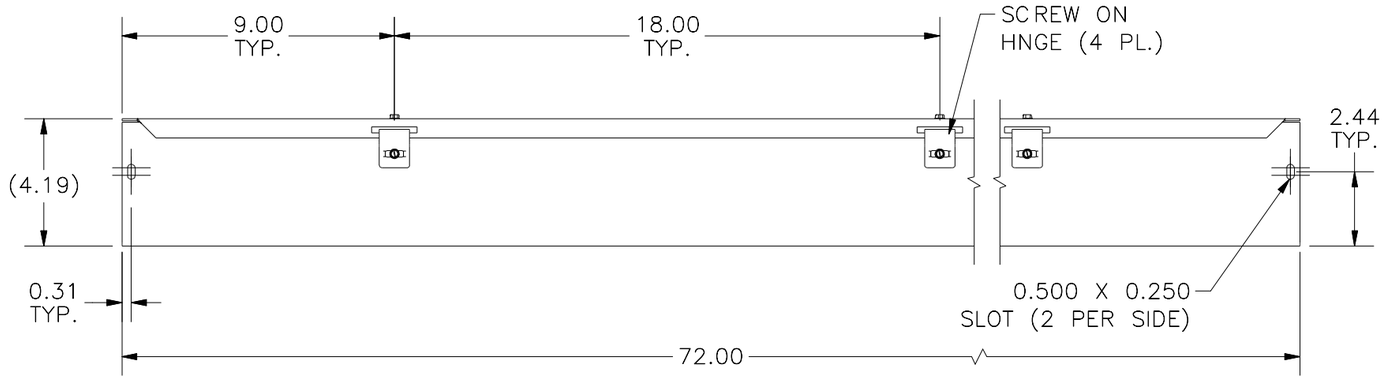


FRONT VIEW

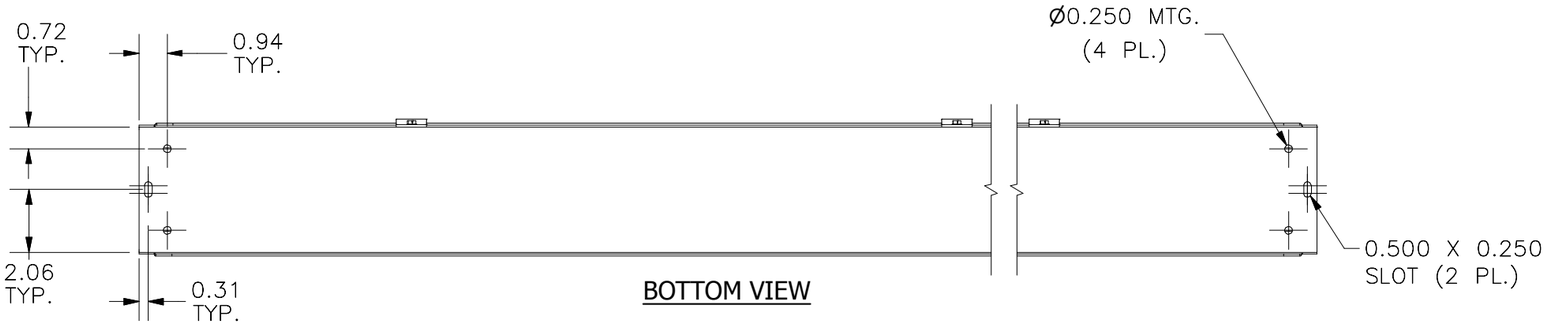


BOTTOM VIEW

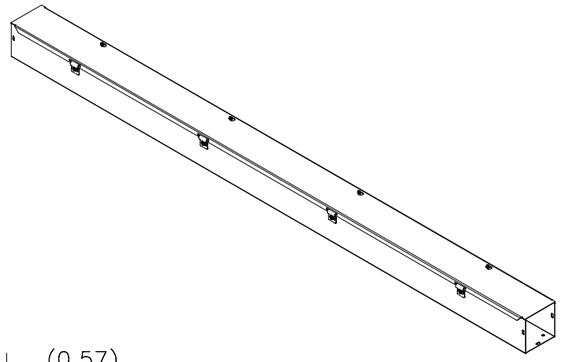

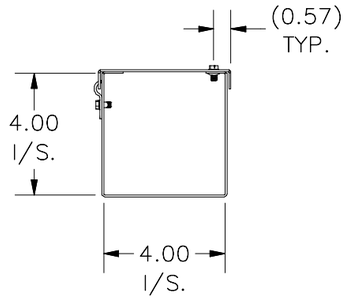


RIGHT VIEW

# PART#: HS446NK
# (DATA SUBJECT TO CHANGE WITHOUT NOTICE)

THIS DRAWING IS PROPERTY OF HUBBELL INC. WIEGMANN
ALL INFORMATION IS PROPRIETARY AND NOT TO BE DUPLICATED