BALDOR • RELIANCE

Product Information Packet

IDNM3661T

3HP,1760RPM,3PH,60HZ,184TC,0636M,TENV,F1

Copyright © All product information within this document is subject to ABB Motors and Mechanical Inc. copyright © protection, unless otherwise noted.

Part Detail

Revision:	-	**Status:**	PRD/A	**Change #:**		**Proprietary:**	No
Type:	AC	**Elec. Spec:**	06WGX370	**CD Diagram:**	CD0005	**Mfg Plant:**	
Mech. Spec:	06F551	**Layout:**	06LYF551	**Poles:**	04	**Created Date:**	04-03-2017
Base:	RG	**Eff. Date:**	04-06-2017	**Leads:**	9#16		

Specs

Catalog Number:	IDNM3661T	**Inverter Code:**	Inverter Duty
Enclosure:	TENV	**KVA Code:**	L
Frame:	184TC	**Lifting Lugs:**	Standard Lifting Lugs
Frame Material:	Iron	**Locked Bearing Indicator:**	Locked Bearing
Output @ Frequency:	3.000 HP @ 60 HZ	**Motor Lead Quantity/Wire Size:**	9 @ 16 AWG
Synchronous Speed @ Frequency:	1800 RPM @ 60 HZ	**Motor Lead Exit:**	Ko Box
Voltage @ Frequency:	230.0 V @ 60 HZ	**Motor Lead Termination:**	Flying Leads
	460.0 V @ 60 HZ	**Motor Type:**	0636M
XP Class and Group:	None	**Mounting Arrangement:**	F1
XP Division:	Not Applicable	**Power Factor:**	73
Agency Approvals:	UR	**Product Family:**	General Purpose
	CSA	**Pulley End Bearing Type:**	Ball
Auxillary Box:	No Auxillary Box	**Pulley Face Code:**	C-Face
Auxillary Box Lead Termination:	None	**Pulley Shaft Indicator:**	Standard
Base Indicator:	Rigid	**Rodent Screen:**	None
Bearing Grease Type:	Polyrex EM (-20F +300F)	**RoHS Status:**	ROHS COMPLIANT
Blower:	None	**Shaft Extension Location:**	Pulley End
Current @ Voltage:	4.300 A @ 460.0 V	**Shaft Ground Indicator:**	No Shaft Grounding

	8.600 A @ 230.0 V
Design Code:	A
Drip Cover:	No Drip Cover
Duty Rating:	CONT
Electrically Isolated Bearing:	Not Electrically Isolated
Feedback Device:	NO FEEDBACK
Front Face Code:	Encoder/Feedback Device
Front Shaft Indicator:	None
Heater Indicator:	No Heater
Insulation Class:	H

Shaft Rotation:	Reversible
Shaft Slinger Indicator:	No Slinger
Speed Code:	Single Speed
Motor Standards:	NEMA
Starting Method:	Direct on line
Thermal Device - Bearing:	None
Thermal Device - Winding:	Normally Closed Thermostat
Vibration Sensor Indicator:	No Vibration Sensor
Winding Thermal 1:	None
Winding Thermal 2:	None

Nameplate NP1162L

CAT NO	IDNM3661T						
SPEC.	06F551X370G2						
FRAME	184TC	**HP**	3 TE				
VOLTS	230/460						
MAG CUR	4.8/2.4	**FLA**	8.6/4.3				
RPM	1760	**RPM MAX**	6000				
HZ	60	**PH**	3	**CLASS**	H		
SER.F.	1.00	**DES**	A	**SL HZ**	1.2		
NEMA-NOM-EFF	89.5	**WK2**	0.335				
BLWR V		**PH**		**HZ**		**A**	
RATING	40C AMB-CONT						
DE BRG	6206	**ODE BRG**	6205				
CC	010A	**SN**					

Parts List

Part Number	Description	Quantity
SA336769	SA 06F551X370G2	1.000 EA
RA325021	RA 06F551X370G2	1.000 EA
HW3201A05	3/8-16 EYEBOLT	1.000 EA
06CB3000	BALDOR CONDUIT BOX CAST	1.000 EA
06GS1000	GASKET,CONDUIT BOX	1.000 EA
51XW2520A12	SCREW, HEX SER SLT HD, ZN, 1/4-20 X .75	2.000 EA
11XW1032G06	10-32 X .38, TAPTITE II, HEX WSHR SLTD U	1.000 EA
HW3001B01	BRASS CUP WASHER, FOR #10 SCREW	1.000 EA
36EP1101B70	FR TENV 205 BRG W/ GRSR & THRU-SHAFT ENC	1.000 EA
HW4500A01	1641B(ALEMITE)400 UNIV, GREASE FITT	1.000 EA
HW5100A05	WVY WSHR F/205 & 304 BRGS	1.000 EA
36PE1300A01	PU ENDPLATE, MACH	1.000 EA
HW4500A01	1641B(ALEMITE)400 UNIV, GREASE FITT	1.000 EA
10XN2520A26	1/4-20X 1 5/8 HEX HD	4.000 EA
HW1001A25	LOCKWASHER 1/4, ZINC PLT .493 OD, .255 I	4.000 EA
HA3101A34	THRUBOLT- 1/4-20 X 10.375	4.000 EA
35FH4801G	THRU-SHAFT ENCODER COVER INV/VECTOR F1 &	1.000 EA
WD4129	1.50 X 1.50 GRAY SNAP IN PLUG PROMOULD #	2.000 EA
10XN2520A08	1/4-20X1/2 HEX HEAD CAP	4.000 EA
10XN2520A08	1/4-20X1/2 HEX HEAD CAP	1.000 EA
06CB3500	BALDOR CONDUIT BOX LID	1.000 EA
06GS1001	BALDOR CONDUIT BOX GASKET	1.000 EA
51XW2520A12	.25-20 X .75, TAPTITE II, HEX WSHR SLTD	2.000 EA
HW2501E16	KEY, 1/4 SQ X 1.750	1.000 EA

Parts List (continued)

Part Number	Description	Quantity
HA7000A02	KEY RETAINER RING, 1 1/8 DIA, 1 3/8 DIA	1.000 EA
MJ5004A05	#242-21 LOCTITE GENERAL PURPOSE MED. STR	0.005 EA
85XU0407S04	4X1/4 U DRIVE PIN STAINLESS	2.000 EA
LB1115N	LABEL,LIFTING DEVICE (ON ROLLS)	1.000 EA
MJ1000A02	GREASE, POLYREX EM EXXON (USe 4824-15A)	0.050 LB
MG1000G27	MED CHARCOAL METALLIC GREY 400-0096	0.028 GA
LB1119N	WARNING LABEL	1.000 EA
LC0145B01	CONNECTION LABEL	1.000 EA
NP1162L	SS INV UL CSA CC	1.000 EA
36PA1001	PKG GRP, PRINT PK1017A06	1.000 EA
MN416A01	TAG-INSTAL-MAINT no wire (1200/bx) 5/18	1.000 EA

AC Induction Motor Performance Data

Record # 55897 - Typical performance - not guaranteed values

Winding: 06WGX370-R008	**Type:** 0636M	**Enclosure:** TENV

Nameplate Data				460 V, 60 Hz: High Voltage Connection	
Rated Output (HP)	3			Full Load Torque	8.98 LB-FT
Volts	230/460			Start Configuration	direct on line
Full Load Amps	8.6/4.3			Breakdown Torque	38.41 LB-FT
R.P.M.	1760			Pull-up Torque	18.91 LB-FT
Hz	60	Phase	3	Locked-rotor Torque	22.4 LB-FT
NEMA Design Code	A	KVA Code	L	Starting Current	34.2 A
Service Factor (S.F.)	1			No-load Current	2.45 A
NEMA Nom. Eff.	89.5	Power Factor	73	Line-line Res. @ 25ºC	3.58 Ω
Rating - Duty	40C AMB-CONT			Temp. Rise @ Rated Load	74°C
				Locked-rotor Power Factor	41
				Rotor inertia	0.335 LB-FT2

Load Characteristics 460 V, 60 Hz, 3 HP

% of Rated Load	25	50	75	100	125	150
Power Factor	34	53	65	73	78	82
Efficiency	81.6	88.7	90.2	90.4	90.1	88.5
Speed	1791	1783	1774	1765	1755	1741
Line amperes	2.65	3.02	3.6	4.28	5.01	6.06

Performance Graph at 460V, 60Hz, 3.0HP Typical performance - Not guaranteed values

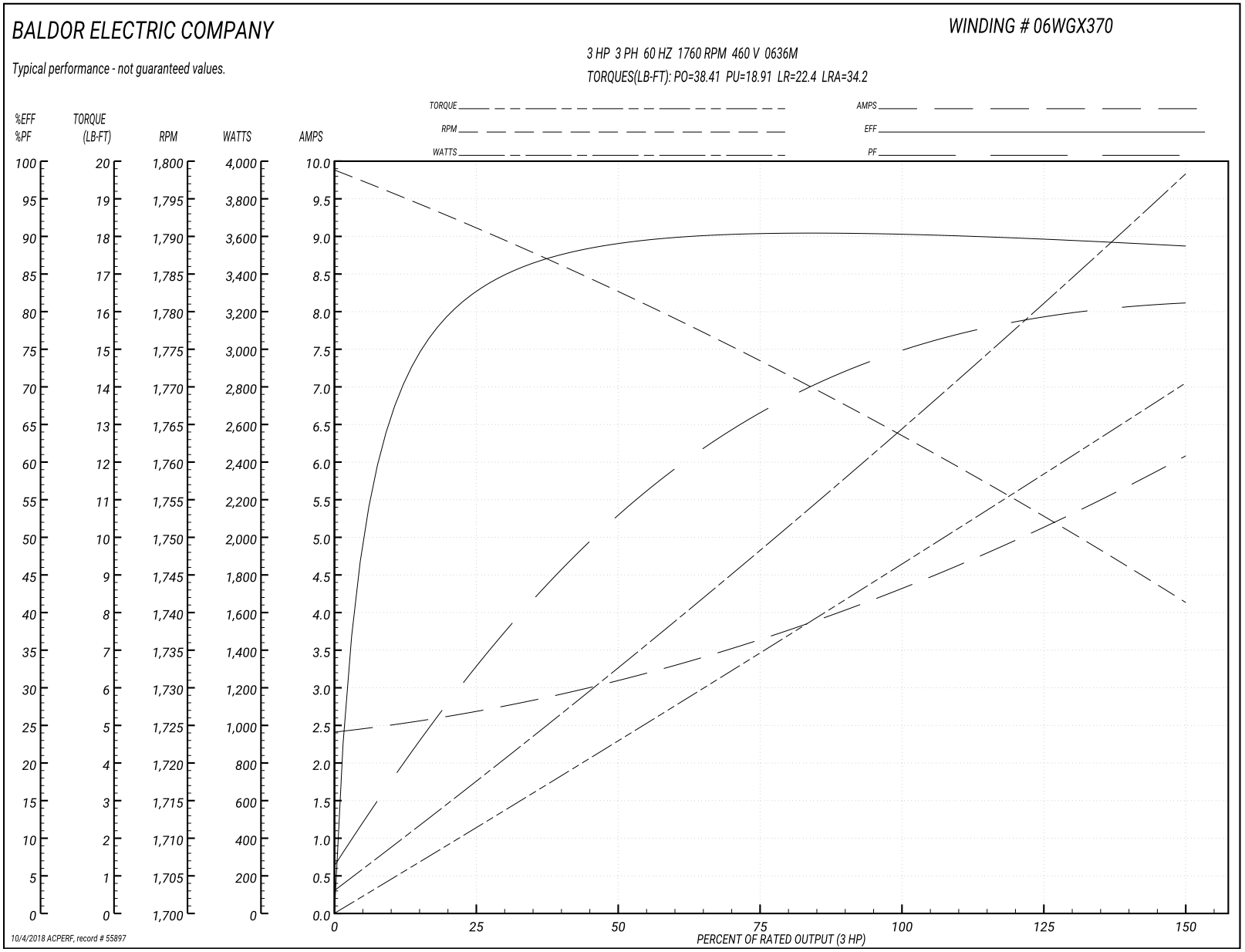

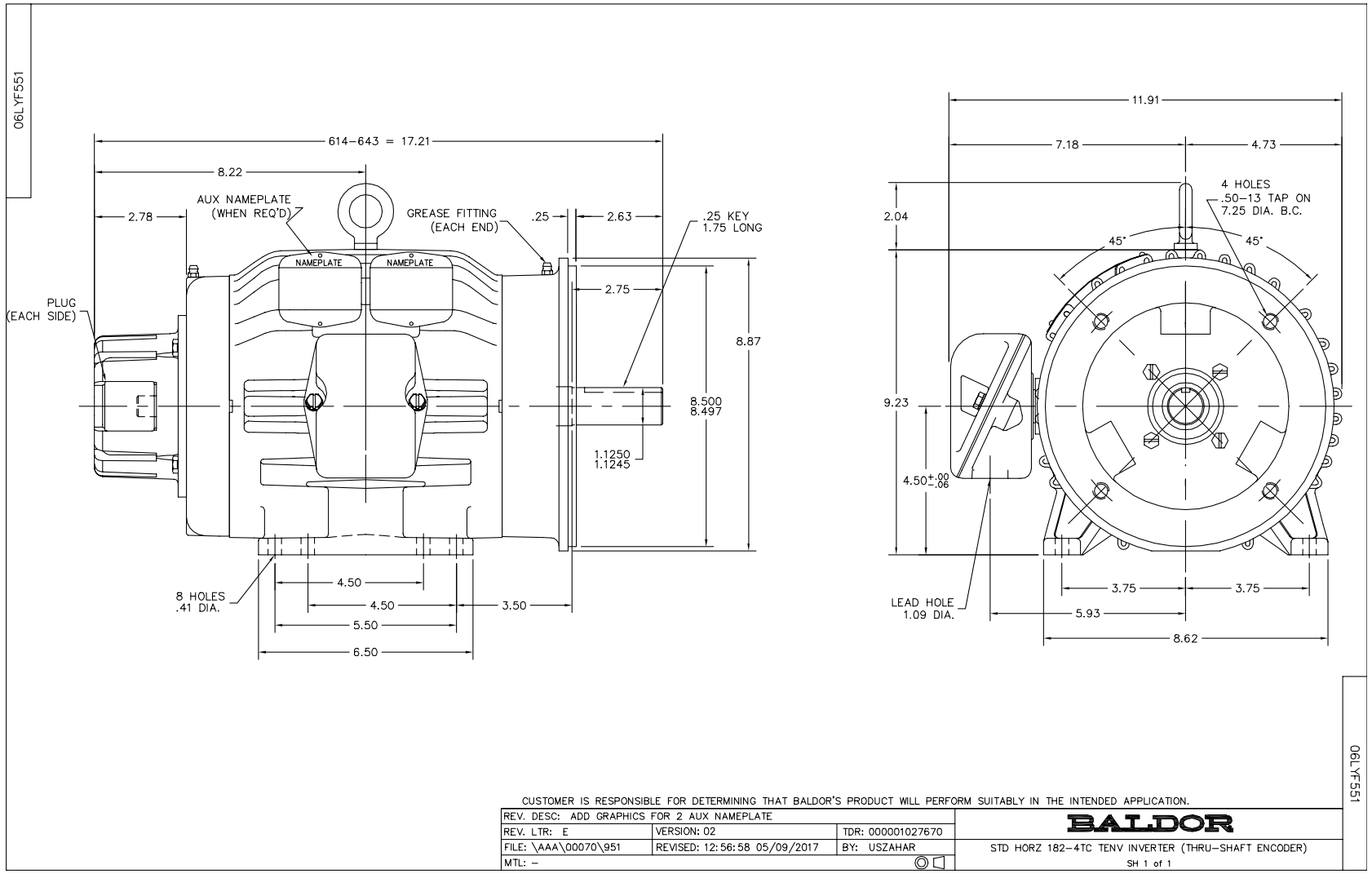

CUSTOMER IS RESPONSIBLE FOR DETERMINING THAT BALDOR'S PRODUCT WILL PERFORM SUITABLY IN THE INTENDED APPLICATION.

REV. DESC: ADD GRAPHICS FOR 2 AUX NAMEPLATE		
REV. LTR: E	VERSION: 02	TDR: 000001027670
FILE: \AAA\00070\951	REVISED: 12:56:58 05/09/2017	BY: USZAHAR
MTL: –		

BALDOR

STD HORZ 182-4TC TENV INVERTER (THRU-SHAFT ENCODER)

SH 1 of 1

CD0005

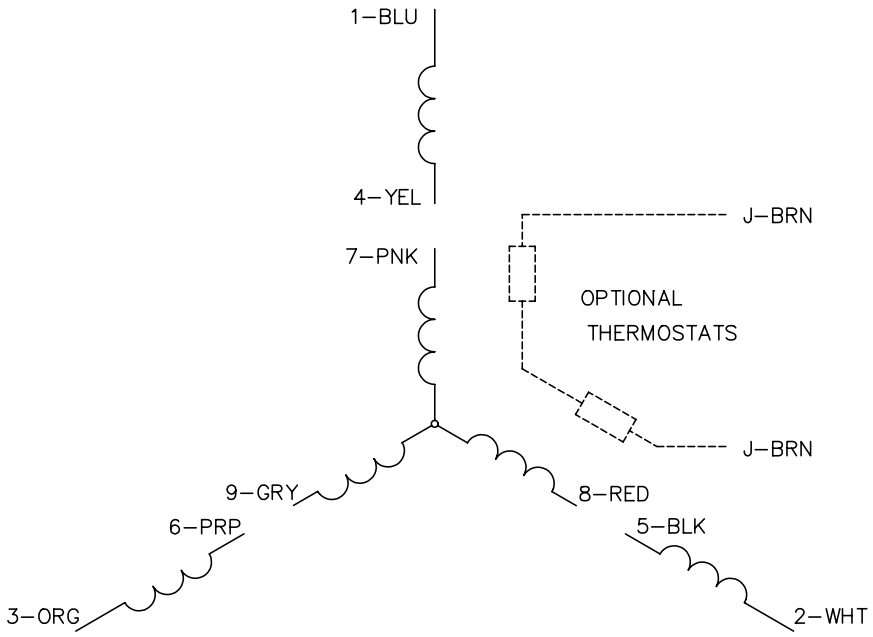

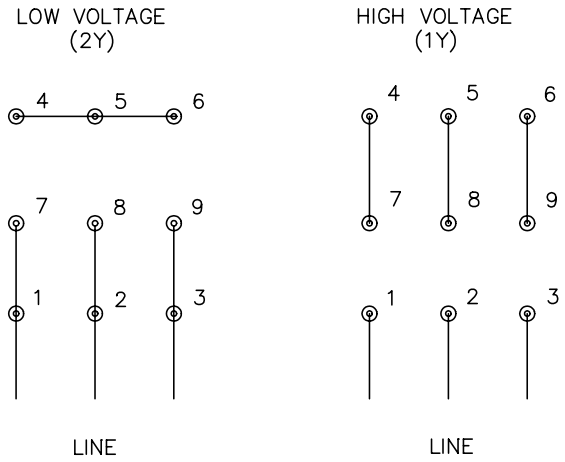

NOTES:

1. INTERCHANGE ANY TWO LINE LEADS TO REVERSE ROTATION.
2. OPTIONAL THERMOSTATS ARE PROVIDED WHEN SPECIFIED.
3. ACTUAL NUMBER OF INTERNAL PARALLEL CIRCUITS MAY BE A MULTIPLE OF THOSE SHOWN ABOVE.
4. LEAD COLORS ARE OPTIONAL. LEADS MUST ALWAYS BE NUMBERED AS SHOWN.

CD0005

REV. DESC: REVISE TO SHOW OPTIONAL COLORS			BALDOR ELECTRIC Co.
REV. LTR: E	BY: JLP	REVISED: 01/19/99 10:15	TDR: 0171435
CD0005		FILE: AAA00005140	MDL: –
		MTL: –	3PH, DV, 9 LEADS