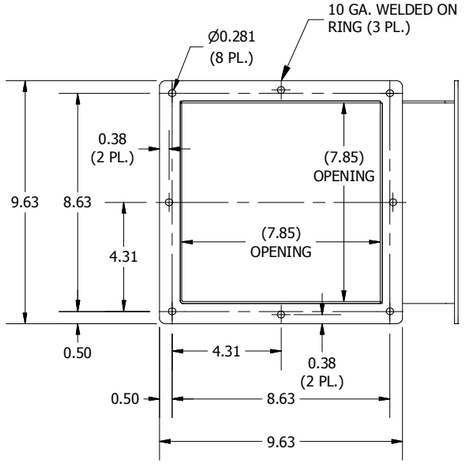

LEFT SIDE VIEW

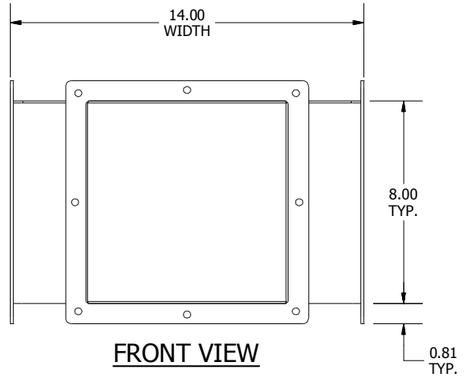

FRONT VIEW

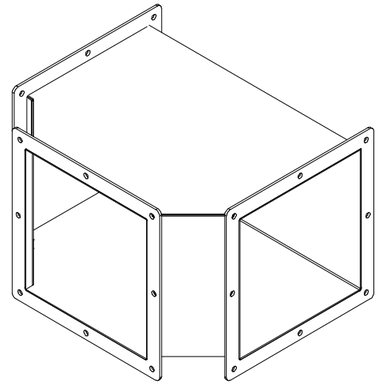

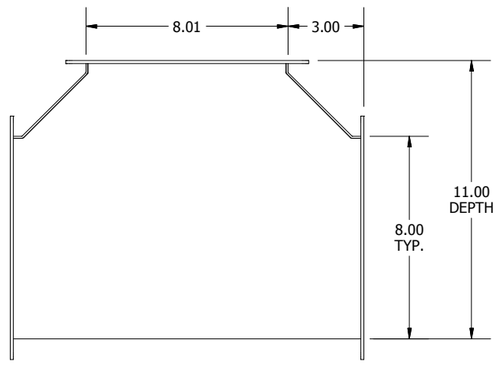

BOTTOM VIEW

PART#: JWT8
(DATA SUBJECT TO CHANGE WITHOUT NOTICE)

THIS DRAWING IS PROPERTY OF HUBBELL INC. WIEGMANN
ALL INFORMATION IS PROPRIETARY AND NOT TO BE DUPLICATED