BALDOR • RELIANCE

Product Information Packet

KEM30006

.33HP,3450RPM,3PH,60HZ,56C,3413M,OPEN,F1

Copyright © All product information within this document is subject to ABB Motors and Mechanical Inc. copyright © protection, unless otherwise noted.

Part Detail

Revision:	F	**Status:**	PRD/A	**Change #:**		**Proprietary:**	No
Type:	AC	**Elec. Spec:**	34WGR140	**CD Diagram:**	CD0005	**Mfg Plant:**	
Mech. Spec:	34F012	**Layout:**	34LYF012	**Poles:**	02	**Created Date:**	10-03-2014
Base:	N	**Eff. Date:**	08-23-2018	**Leads:**	9#18		

Specs

Catalog Number:	KEM30006	**Insulation Class:**	B
Enclosure:	OPEN	**Inverter Code:**	Not Inverter
Frame:	56C	**KVA Code:**	N
Frame Material:	Steel	**Lifting Lugs:**	No Lifting Lugs
Output @ Frequency:	.330 HP @ 60 HZ	**Locked Bearing Indicator:**	Locked Bearing
Synchronous Speed @ Frequency:	3600 RPM @ 60 HZ	**Motor Lead Quantity/Wire Size:**	9 @ 18 AWG
Voltage @ Frequency:	460.0 V @ 60 HZ	**Motor Lead Exit:**	Ko Box
	230.0 V @ 60 HZ	**Motor Lead Termination:**	Flying Leads
XP Class and Group:	None	**Motor Type:**	3413M
XP Division:	Not Applicable	**Mounting Arrangement:**	F1
Agency Approvals:	CSA	**Power Factor:**	77
	UR	**Product Family:**	General Purpose
Auxillary Box:	No Auxillary Box	**Pulley End Bearing Type:**	Ball
Auxillary Box Lead Termination:	None	**Pulley Face Code:**	C-Face
Base Indicator:	No Mounting	**Pulley Shaft Indicator:**	Standard
Bearing Grease Type:	Polyrex EM (-20F +300F)	**Rodent Screen:**	None
Blower:	None	**RoHS Status:**	ROHS COMPLIANT
Current @ Voltage:	.600 A @ 460.0 V	**Shaft Extension Location:**	Pulley End

	1.200 A @ 230.0 V
	1.500 A @ 208.0 V
Design Code:	B
Drip Cover:	Drip Cover
Duty Rating:	CONT
Electrically Isolated Bearing:	Not Electrically Isolated
Feedback Device:	NO FEEDBACK
Front Face Code:	Drip Cover Mounting
Front Shaft Indicator:	None
Heater Indicator:	No Heater

Shaft Ground Indicator:	No Shaft Grounding
Shaft Rotation:	Reversible
Shaft Slinger Indicator:	No Slinger
Speed Code:	Single Speed
Motor Standards:	NEMA
Starting Method:	Direct on line
Thermal Device - Bearing:	None
Thermal Device - Winding:	None
Vibration Sensor Indicator:	No Vibration Sensor
Winding Thermal 1:	None
Winding Thermal 2:	None

Nameplate NP3155L

CAT.NO.	KEM30006								
SPEC.	34F012R140G1								
HP	.33								
VOLTS	230/460								
AMP	1.2/.6								
RPM	3450								
FRAME	56C		**HZ**	60			**PH**	3	
SER.F.	1.35	**CODE**	N		**DES**	B	**CL**	B	
F.L. AVG. EFF.	69.5	**PF**	77						
RATING	40C AMB-CONT								
CC				**USABLE AT 208V**	1.5				
DE	6203		**ODE**	6203					
ENCL	OPEN	**SN**							
	SFA 1.4/.7								

Parts List

Part Number	Description	Quantity
SA288049	SA 34F012R140G1	1.000 EA
RA274250	RA 34F012R140G1	1.000 EA
NS2512A01	INSULATOR, CONDUIT BOX X	1.000 EA
34CB3002A	CB CAST W/.88 DIA HOLE	1.000 EA
51XB1016A07	10-16 X 7/16 HXWSSLD SERTYB	2.000 EA
11XW1032G06	10-32 X .38, TAPTITE II, HEX WSHR SLTD U	1.000 EA
34EP3210A03SP	FR ENDPLATE, MACH	1.000 EA
HW5100A03	WAVY WASHER (W1543-017)	1.000 EA
34EP3401A01SP	PU ENDPLATE, MACH	1.000 EA
34AD2000	BAFFLE PLATE, STAMPED	1.000 EA
60XW0632A06	6-32 X 3/8 TORX HEAD SCREW TAPTITE II	4.000 EA
51XN1032A20	10-32 X 1 1/4 HX WS SL SR	2.000 EA
34FH4000A11	DRIP COVER, STAMPED,PRIMER	1.000 EA
51XW1032A06	10-32 X .38, TAPTITE II, HEX WSHR SLTD S	3.000 EA
34CB4517	CB LID 4 MTG HOLES .22 DIA STAMPED, FOR	1.000 EA
51XW0832A07	8-32 X .44, TAPTITE II, HEX WSHR SLTD SE	4.000 EA
HW2501D13	KEY, 3/16 SQ X 1.375	1.000 EA
HA7000A04	KEY RETAINER 0.625 DIA SHAFTS	1.000 EA
MG1000Y03	MUNSELL 2.53Y 6.70/ 4.60, GLOSS 20,	0.014 GA
85XU0407S04	4X1/4 U DRIVE PIN STAINLESS	2.000 EA
HA3100A12	THRUBOLT 10-32 X 7.375	4.000 EA
LB1119N	WARNING LABEL	1.000 EA
MN416A01	TAG-INSTAL-MAINT no wire (1200/bx) 5/18	1.000 EA
LC0005	CONN.DIA.,TY M,9-LD,DUAL VOLT,REVERSING	1.000 EA

Parts List (continued)

Part Number	Description	Quantity
NP3155L	ALUM SUPER-E UL CSA CC "SEMS"	1.000 EA
35PA1000	PKG GRP, PRINT PK1008A06	1.000 EA
PK3083T	STYROFOAM PACKING CRADLE	1.000 EA
PK3088	MICROFOAM, 8"X"8 PERF. SHEETS 5,400/RL	1.000 EA

AC Induction Motor Performance Data

Record # 47472 - Typical performance - not guaranteed values

Winding: 34WGR140-R002	**Type:** 3413M	**Enclosure:** OPEN

Nameplate Data				460 V, 60 Hz: High Voltage Connection	
Rated Output (HP)	.33			Full Load Torque	0.502 LB-FT
Volts	230/460			Start Configuration	direct on line
Full Load Amps	1.2/.6			Breakdown Torque	2.52 LB-FT
R.P.M.	3450			Pull-up Torque	2.29 LB-FT
Hz	60	Phase	3	Locked-rotor Torque	2.37 LB-FT
NEMA Design Code	B	KVA Code	N	Starting Current	4.66 A
Service Factor (S.F.)	1.35			No-load Current	0.388 A
NEMA Nom. Eff.	69.5	Power Factor	77	Line-line Res. @ 25ºC	42 Ω
Rating - Duty	40C AMB-CONT			Temp. Rise @ Rated Load	14°C
S.F. Amps	1.4/.7			Temp. Rise @ S.F. Load	16°C
				Locked-rotor Power Factor	72
				Rotor inertia	0.0121 LB-FT2

Load Characteristics 460 V, 60 Hz, 0.33 HP

% of Rated Load	25	50	75	100	125	150	S.F.
Power Factor	44	59	69	77	82	85	83
Efficiency	43.9	59.5	67.4	71.1	73.6	74.7	74
Speed	3558	3534	3508	3480	3452	3420	3439
Line amperes	0.408	0.448	0.51	0.572	0.645	0.73	0.679

Performance Graph at 460V, 60Hz, 0.33HP Typical performance - Not guaranteed values

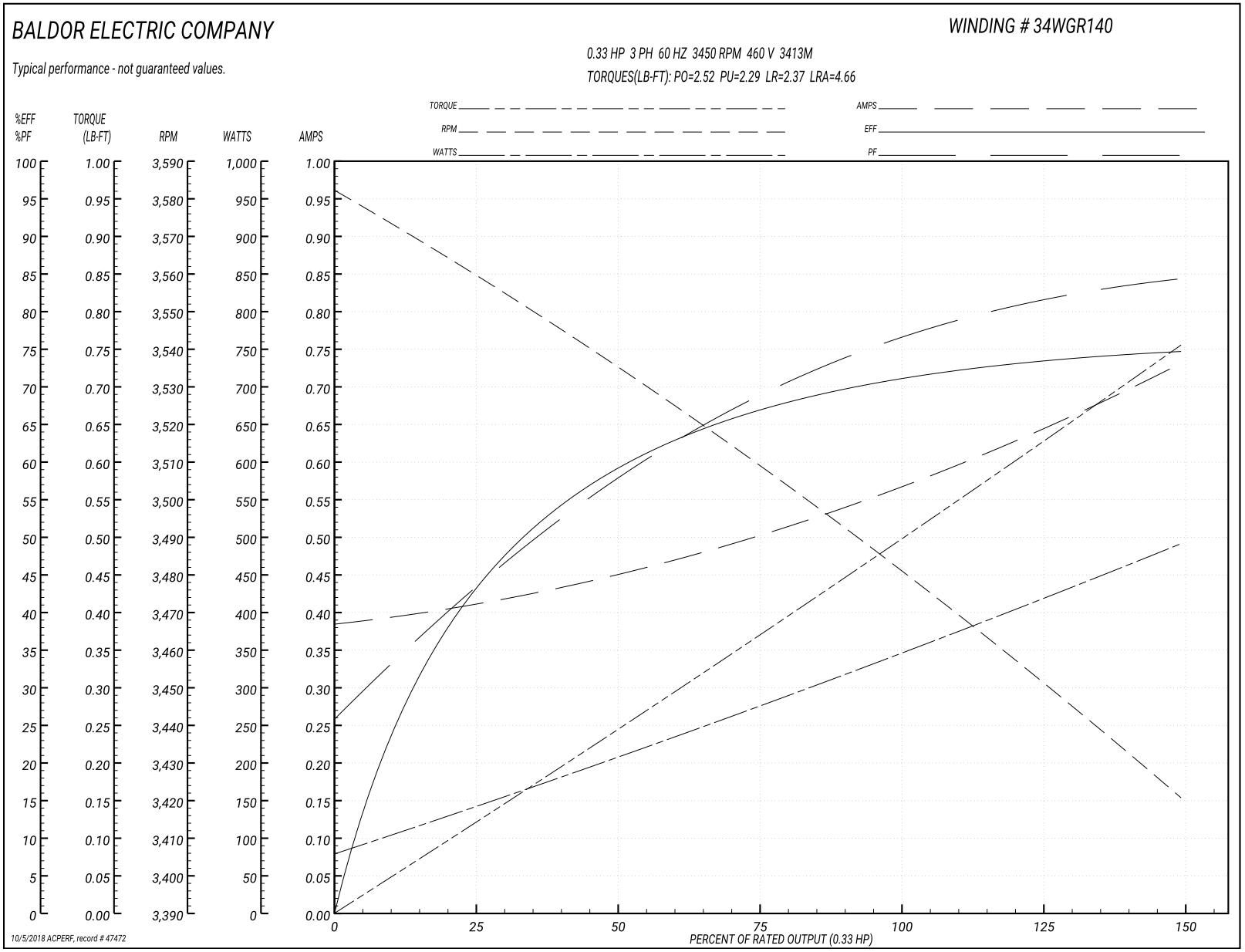

AC Induction Motor Performance Data

Record # 49385 - Typical performance - not guaranteed values

Winding: 34WGR140-R002	**Type:** 3413M	**Enclosure:** OPEN

Nameplate Data				230 V, 60 Hz: Low Voltage Connection	
Rated Output (HP)	.33			Full Load Torque	0.502 LB-FT
Volts	230/460			Start Configuration	direct on line
Full Load Amps	1.2/.6			Breakdown Torque	2.52 LB-FT
R.P.M.	3450			Pull-up Torque	2.29 LB-FT
Hz	60	Phase	3	Locked-rotor Torque	2.37 LB-FT
NEMA Design Code	B	KVA Code	N	Starting Current	9.32 A
Service Factor (S.F.)	1.35			No-load Current	0.776 A
NEMA Nom. Eff.	69.5	Power Factor	77	Line-line Res. @ 25ºC	10.5 Ω
Rating - Duty	40C AMB-CONT			Temp. Rise @ Rated Load	14°C
S.F. Amps	1.4/.7			Temp. Rise @ S.F. Load	16°C
				Locked-rotor Power Factor	72
				Rotor inertia	0.0121 LB-FT2

Load Characteristics 230 V, 60 Hz, 0.33 HP

% of Rated Load	25	50	75	100	125	150	S.F.
Power Factor	44	59	69	77	82	85	83
Efficiency	43.9	59.5	67.4	71.1	73.6	74.7	74
Speed	3558	3534	3508	3480	3452	3420	3439
Line amperes	0.816	0.896	1.02	1.144	1.29	1.46	1.358

Performance Graph at 230V, 60Hz, 0.33HP Typical performance - Not guaranteed values

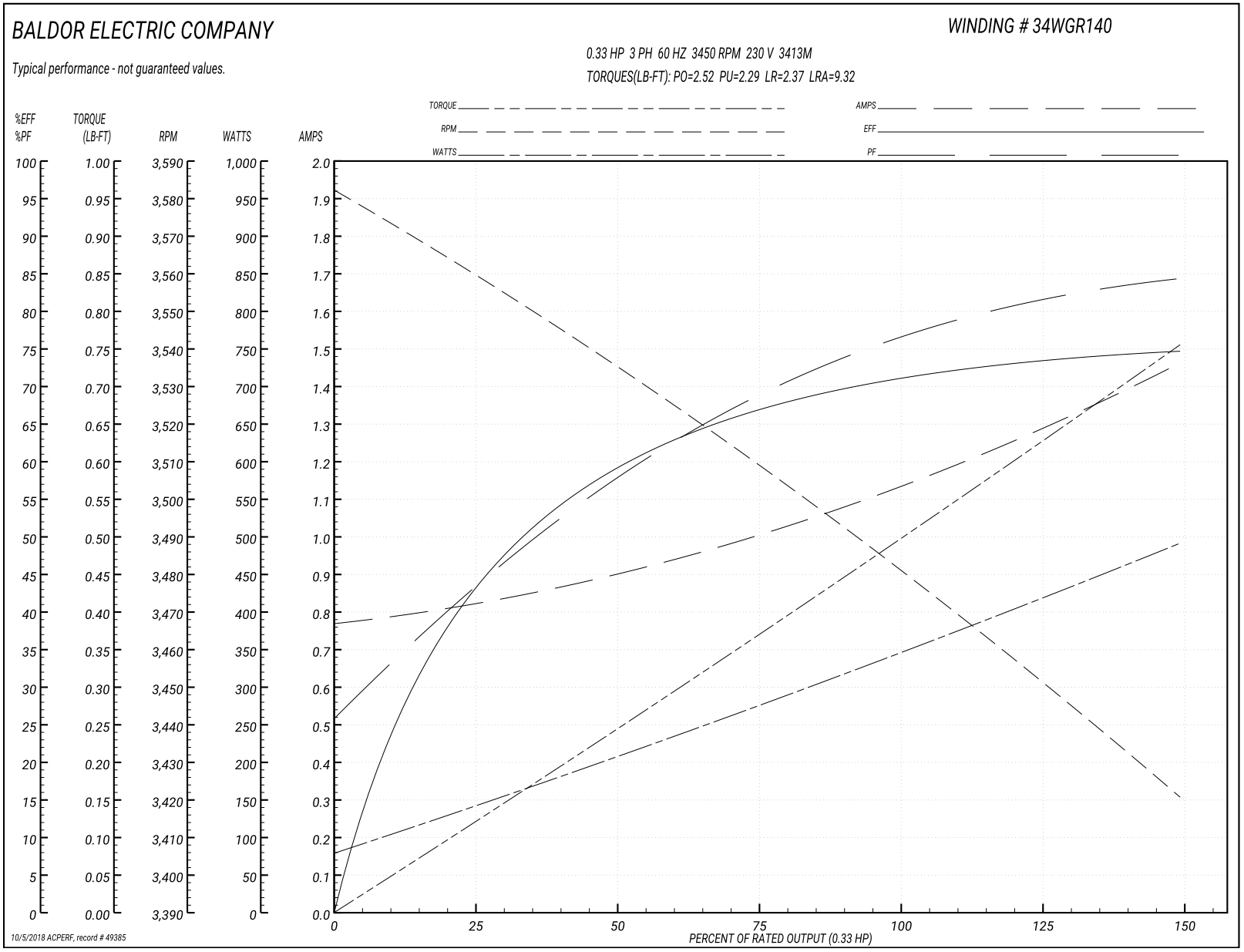

34LYF012

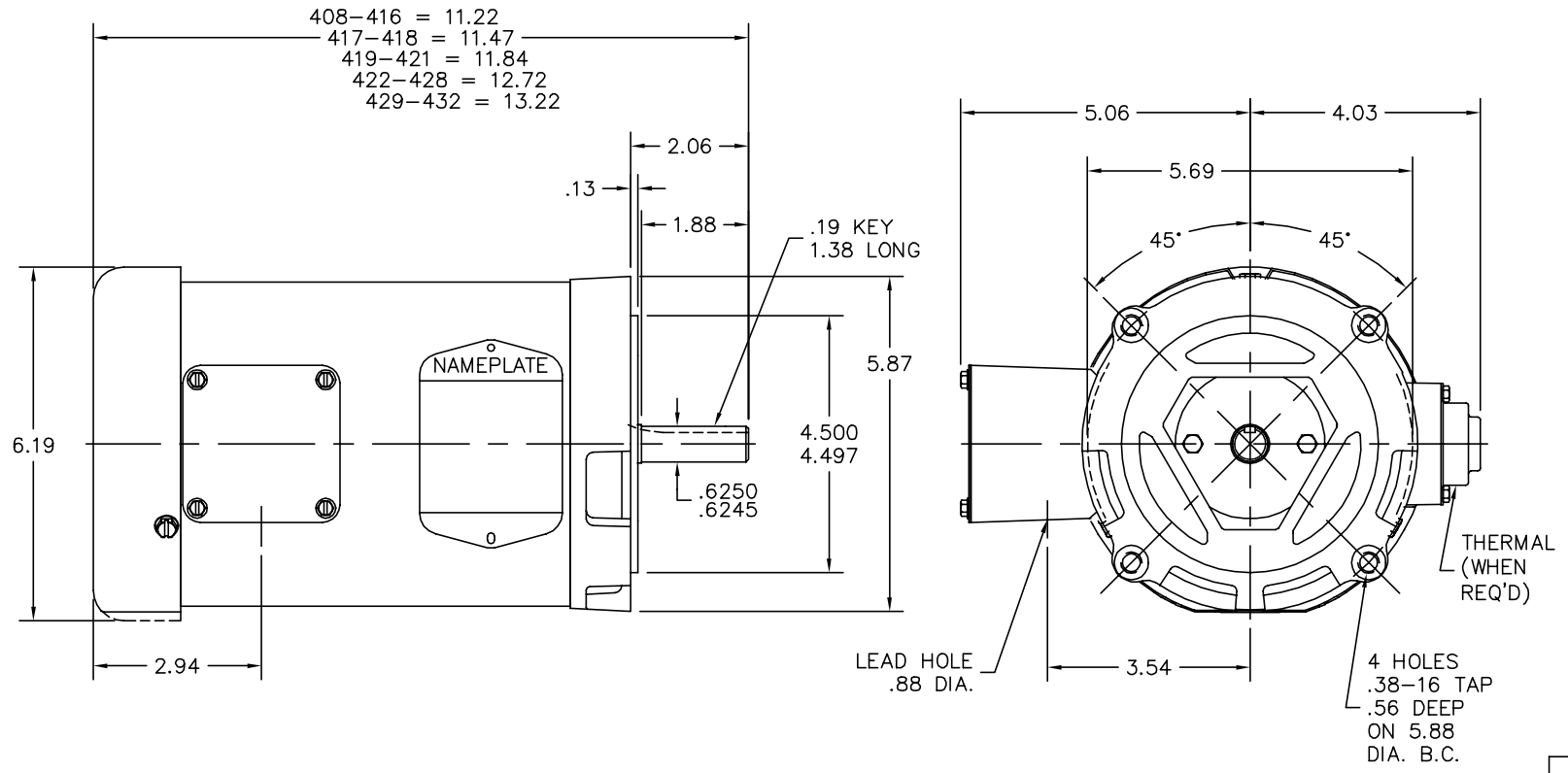

34LYF012

CUSTOMER IS RESPONSIBLE FOR DETERMINING THAT BALDOR'S PRODUCT WILL PERFORM SUITABLY IN THE INTENDED APPLICATION.

REV. DESC: ADD KOBX DIMENSION		
REV. LTR: H	VERSION: 03	TDR: 000000983990
FILE: \AAA\00020\667	REVISED: 01:19:34 06/13/2016	BY: ENMAIYO
MTL: –		

BALDOR

STD VERT MODEL 34M NEMA 56C OPEN W/DRIP COVER

SH 1 of 1

CD0005

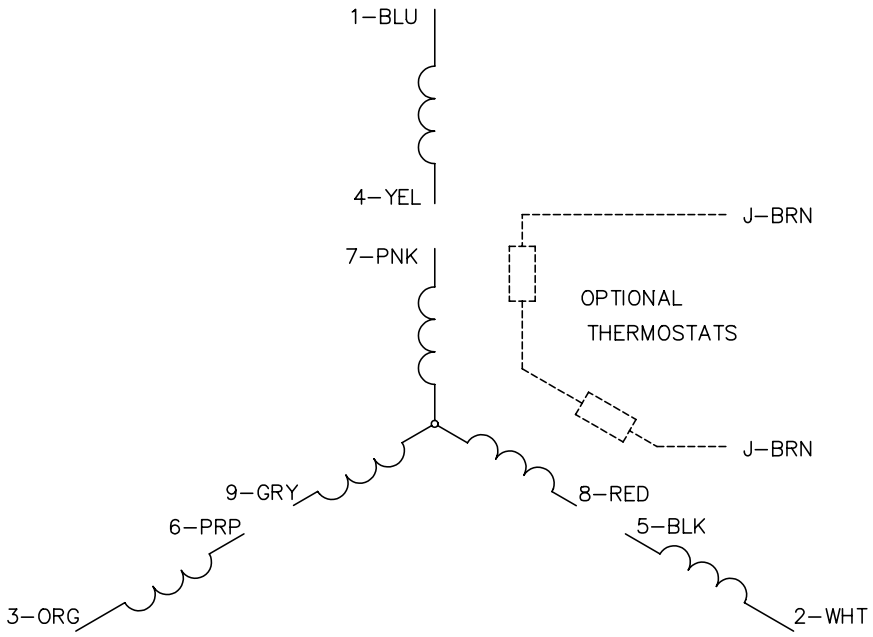

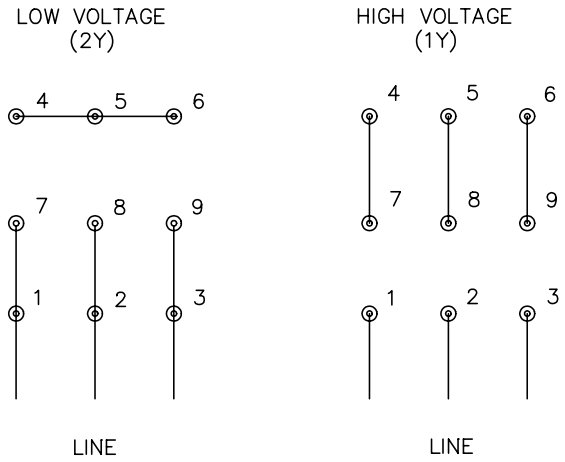

NOTES:

1. INTERCHANGE ANY TWO LINE LEADS TO REVERSE ROTATION.
2. OPTIONAL THERMOSTATS ARE PROVIDED WHEN SPECIFIED.
3. ACTUAL NUMBER OF INTERNAL PARALLEL CIRCUITS MAY BE A MULTIPLE OF THOSE SHOWN ABOVE.
4. LEAD COLORS ARE OPTIONAL. LEADS MUST ALWAYS BE NUMBERED AS SHOWN.

CD0005

REV. DESC: REVISE TO SHOW OPTIONAL COLORS			BALDOR ELECTRIC Co.
REV. LTR: E	BY: JLP	REVISED: 01/19/99 10:15	TDR: 0171435
CD0005		FILE: AAA00005140	MDL: –
		MTL: –	3PH, DV, 9 LEADS