Accessories
for cylinders, tie-rod cylinders
KLR1

Industrial Automation

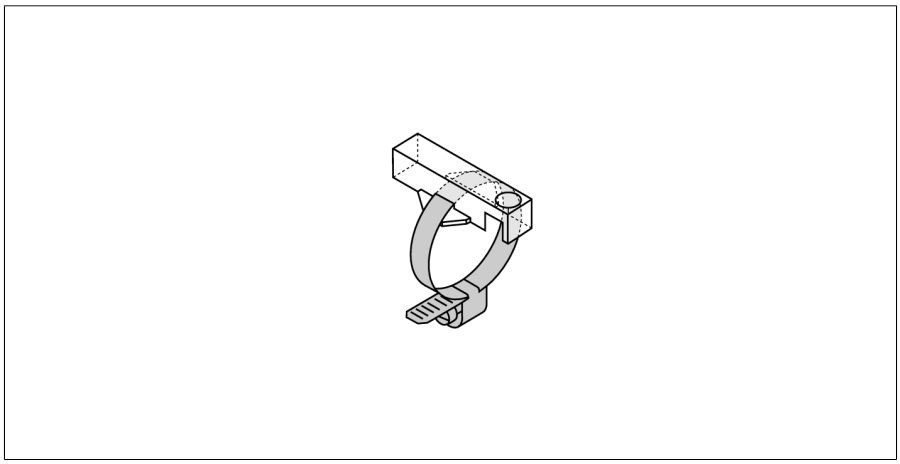

- **Mounting on round cylinders with additional clamp**
- **Cylinder diameter: **…** mm**
- **Plastic: Trogamid**

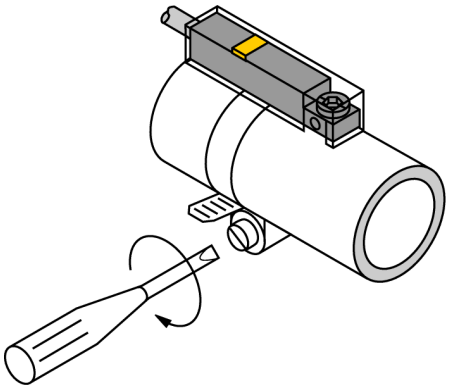

Type designation	KLR1
Ident-No.	6970600

Design	Accessories for rectangular types,INT
Dimensions	33 x 15 x 9 mm
Housing material	Plastic, Trogamit
Fixing clamp for correspondent cylinder diameter	alle mm

Edition • 2018-05-22T21:13:07+02:00