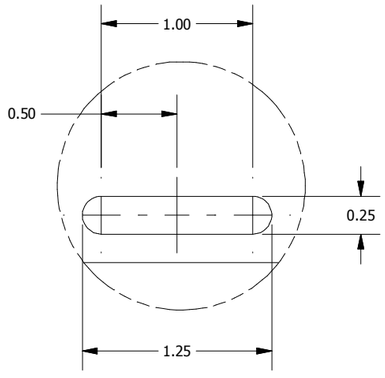


DETAIL A (16 PL.)
(SLOT DETAIL)

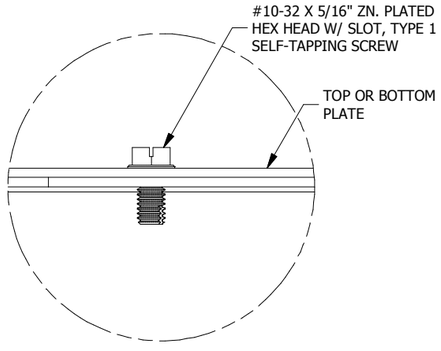


DETAIL B (6 PL.)
(ASSM. DETAIL)

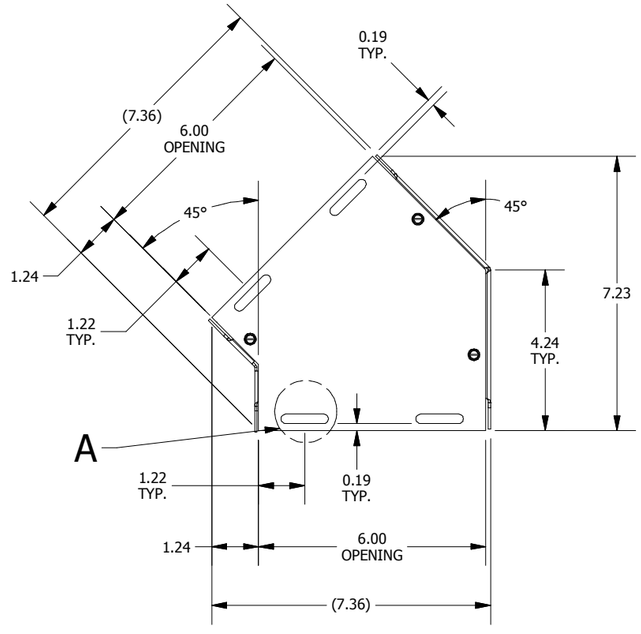


TOP VIEW

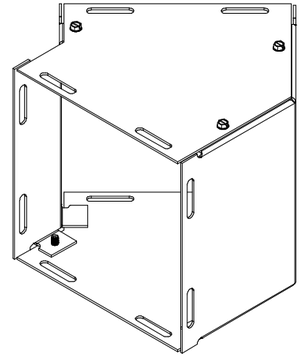

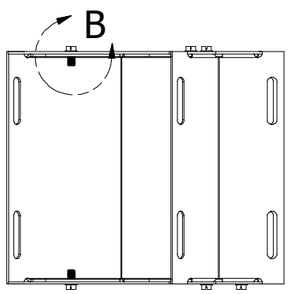


SIDE VIEW

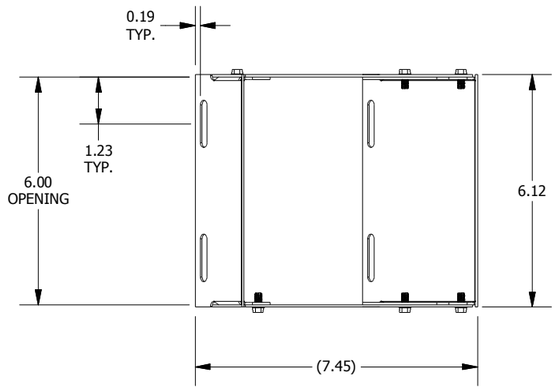


FRONT VIEW

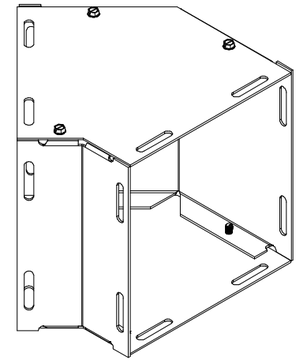

PART#: L060645G
(DATA SUBJECT TO CHANGE WITHOUT NOTICE)

THIS DRAWING IS PROPERTY OF HUBBELL INC. WIEGMANN
ALL INFORMATION IS PROPRIETARY AND NOT TO BE DUPLICATED