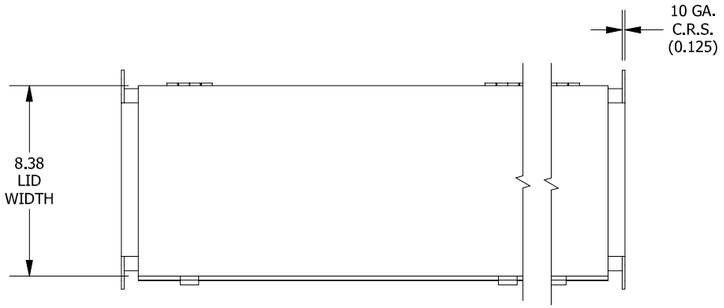

TOP VIEW

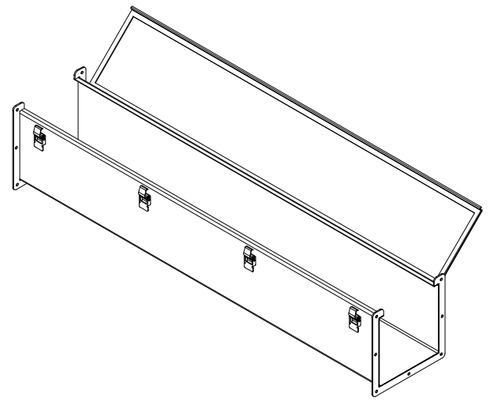

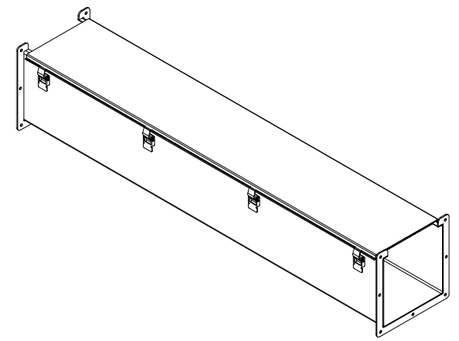

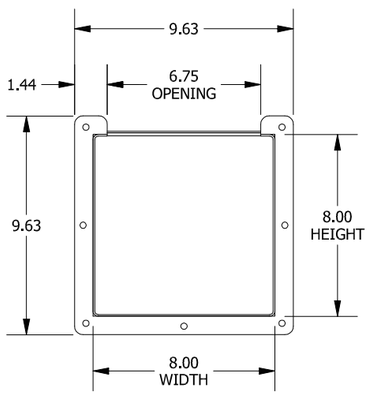

LEFT SIDE VIEW

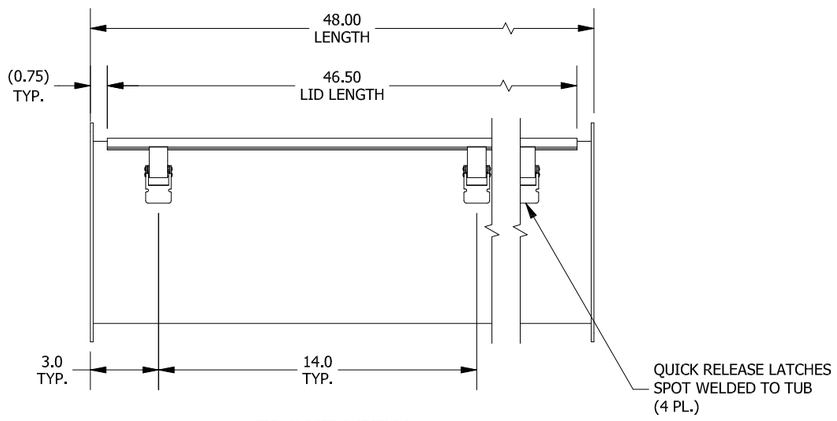

FRONT VIEW

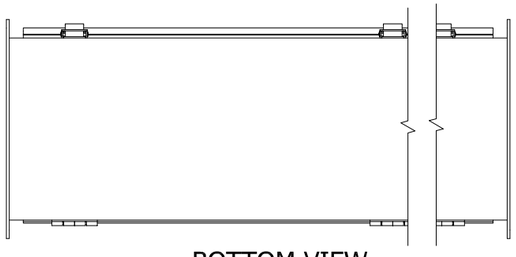

BOTTOM VIEW

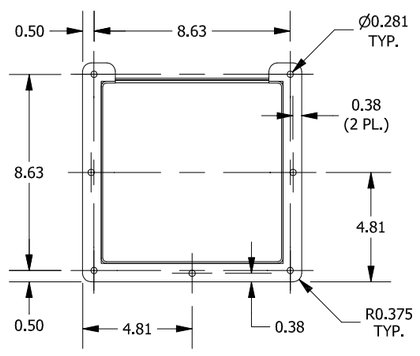

RIGHT SIDE VIEW

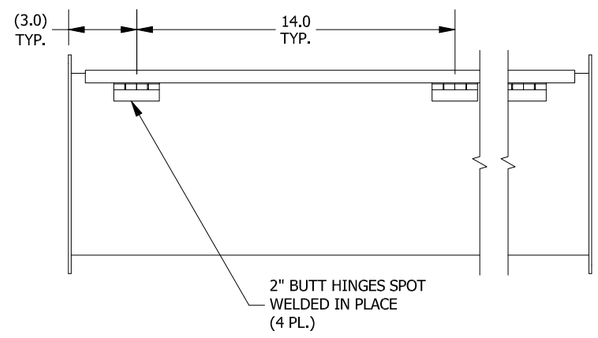

BACK VIEW

PART#: LJW84
(DATA SUBJECT TO CHANGE WITHOUT NOTICE)

THIS DRAWING IS PROPERTY OF HUBBELL INC. WIEGMANN
ALL INFORMATION IS PROPRIETARY AND NOT TO BE DUPLICATED