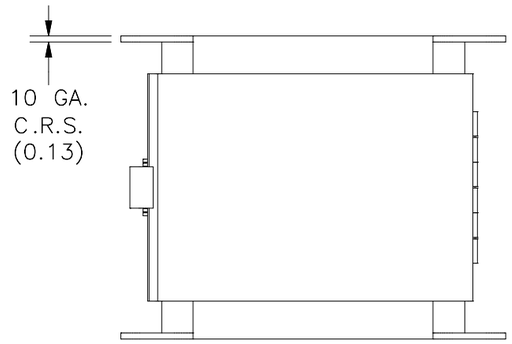

TOP VIEW

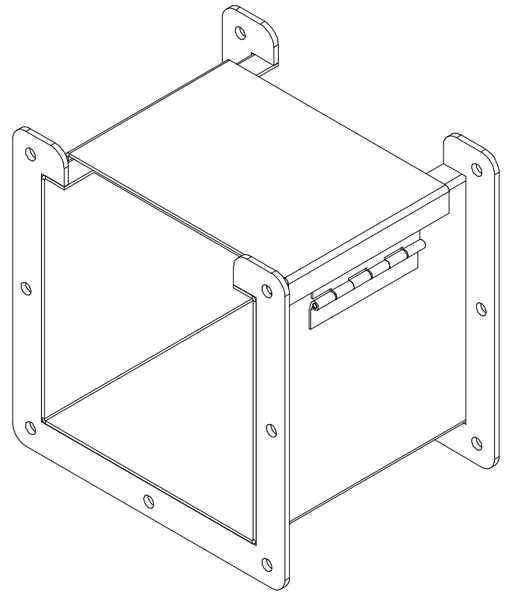

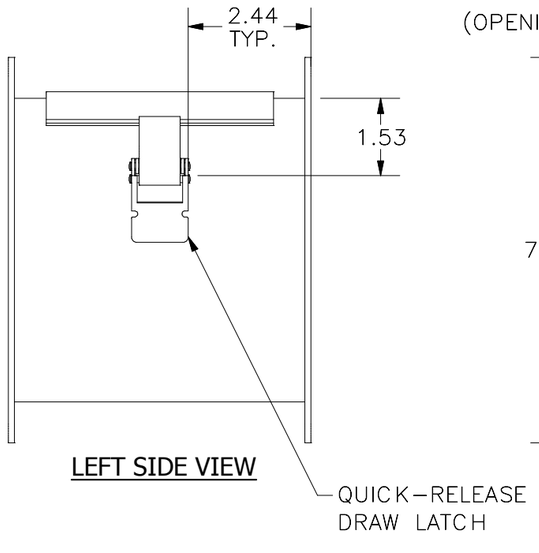

LEFT SIDE VIEW

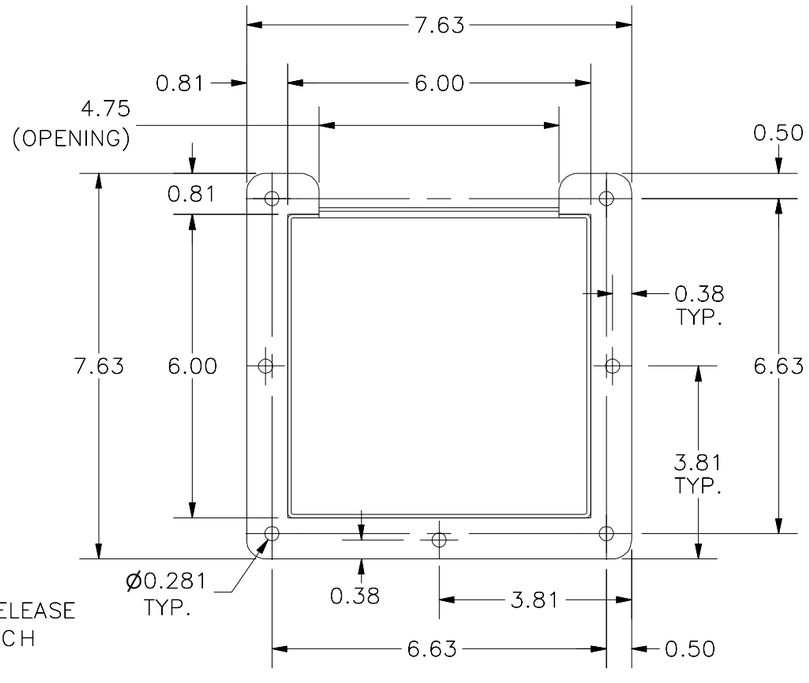

FRONT VIEW

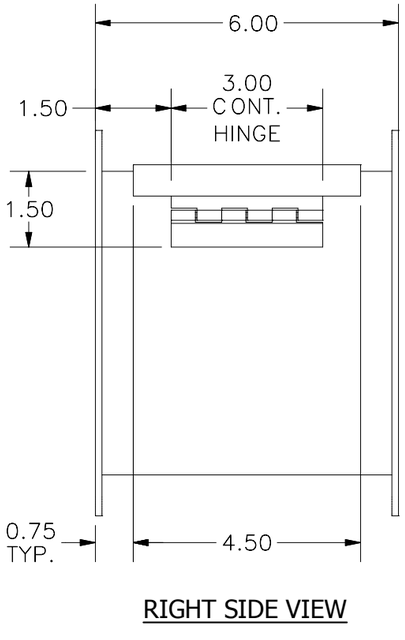

RIGHT SIDE VIEW

PART#: LJWN666
(DATA SUBJECT TO CHANGE WITHOUT NOTICE)

THIS DRAWING IS PROPERTY OF HUBBELL INC. WIEGMANN
ALL INFORMATION IS PROPRIETARY AND NOT TO BE DUPLICATED