BALDOR • RELIANCE

Product Information Packet

M3353

.13HP,1725RPM,3PH,60HZ,42,3313M,TEFC,F1

Copyright © All product information within this document is subject to ABB Motors and Mechanical Inc. copyright © protection, unless otherwise noted.

Part Detail

Revision:	AF	**Status:**	PRD/A	**Change #:**		**Proprietary:**	No
Type:	AC	**Elec. Spec:**	33WG0515	**CD Diagram:**	CD0005A05	**Mfg Plant:**	
Mech. Spec:	33-870	**Layout:**	33LY0870	**Poles:**	04	**Created Date:**	06-25-2007
Base:	RG	**Eff. Date:**	09-13-2018	**Leads:**	9#18		

Specs

Catalog Number:	M3353	**Inverter Code:**	Not Inverter
Enclosure:	TEFC	**KVA Code:**	-
Frame:	42	**Lifting Lugs:**	No Lifting Lugs
Frame Material:	Steel	**Locked Bearing Indicator:**	No Locked Bearing
Output @ Frequency:	.130 HP @ 60 HZ	**Motor Lead Quantity/Wire Size:**	9 @ 18 AWG
Synchronous Speed @ Frequency:	1800 RPM @ 60 HZ	**Motor Lead Exit:**	Ko Box
Voltage @ Frequency:	230.0 V @ 60 HZ	**Motor Lead Termination:**	Flying Leads
	460.0 V @ 60 HZ	**Motor Type:**	3313M
Agency Approvals:	UR	**Mounting Arrangement:**	F1
	CSA	**Power Factor:**	42
Auxillary Box:	No Auxillary Box	**Product Family:**	General Purpose
Auxillary Box Lead Termination:	None	**Pulley End Bearing Type:**	Ball
Base Indicator:	Rigid	**Pulley Face Code:**	Standard
Bearing Grease Type:	Polyrex EM (-20F +300F)	**Pulley Shaft Indicator:**	Standard
Blower:	None	**Rodent Screen:**	None
Current @ Voltage:	.500 A @ 460.0 V	**RoHS Status:**	ROHS COMPLIANT
	1.000 A @ 230.0 V	**Shaft Extension Location:**	Pulley End
	1.150 A @ 208.0 V	**Shaft Ground Indicator:**	No Shaft Grounding

Design Code:	-	**Shaft Rotation:**	Reversible
Drip Cover:	No Drip Cover	**Shaft Slinger Indicator:**	No Slinger
Duty Rating:	CONT	**Speed Code:**	Single Speed
Electrically Isolated Bearing:	Not Electrically Isolated	**Motor Standards:**	NEMA
Feedback Device:	NO FEEDBACK	**Starting Method:**	Direct on line
Feedback Signal:	NONE	**Thermal Device - Bearing:**	NONE (OLD)
Front Face Code:	Standard	**Thermal Device - Winding:**	None
Front Shaft Indicator:	None	**Vibration Sensor Indicator:**	No Vibration Sensor
Heater Indicator:	No Heater	**Winding Thermal 1:**	None
Insulation Class:	B	**Winding Thermal 2:**	None

Nameplate NP1256L

CAT.NO.	M3353							
SPEC.	33-870-515							
HP	.13							
VOLTS	230/460							
AMP	1/.5							
RPM	1725							
FRAME	42		**HZ**	60			**PH**	3
SER.F.	1.40	**CODE**	-	**DES**	-		**CLASS**	B
NEMA-NOM-EFF	44	**PF**	42					
RATING	40C AMB-CONT							
CC						**USABLE AT 208V**	1.15	
DE	6203			**ODE**	6203			
ENCL	TEFC	**SN**						
	SFA 1.1/.55							

Parts List

Part Number	Description	Quantity
SA007370	SA 33-870-515	1.000 EA
RA003817	RA 33-870-515	1.000 EA
NS2512A01	INSULATOR, CONDUIT BOX X	1.000 EA
34CB3002A64	CB W/.69 DIA @ 6	1.000 EA
34GS1029A01	GASKET, CONDUIT BOX	1.000 EA
51XB1016A07	10-16 X 7/16 HXWSSLD SERTYB	2.000 EA
11XW1032G06	10-32 X .38, TAPTITE II, HEX WSHR SLTD U	1.000 EA
33EP3100A01SP	EP,33AC ODE GP 6203 TEFC W/DRAIN	1.000 EA
HW5100A03	WAVY WASHER (W1543-017)	1.000 EA
33EP3100A02	PU ENDPLATE, MACH	1.000 EA
XY1032A02	10-32 HEX NUT DIRECTIONAL SERRATION	2.000 EA
33FN3000	EXTERNAL FAN, PLASTIC	1.000 EA
HW1003A08	WASHER, #8 EX TH LK, ZN (F/S)	1.000 EA
33FH4001A01	45N COVER, STAMPED	1.000 EA
51XW1032A06	10-32 X .38, TAPTITE II, HEX WSHR SLTD S	3.000 EA
34CB4517	CB LID 4 MTG HOLES .22 DIA STAMPED, FOR	1.000 EA
34GS1031A01	GASKET, FLAT CONDUIT BOX LID (LEXIDE)	1.000 EA
51XW0832A07	8-32 X .44, TAPTITE II, HEX WSHR SLTD SE	4.000 EA
MG1000G27	MED CHARCOAL METALLIC GREY 400-0096	0.013 GA
85XU0407S04	4X1/4 U DRIVE PIN STAINLESS	2.000 EA
HA3100A11	THRUBOLT 10-32 X 6.750	2.000 EA
LC0005E01	CONN.DIA./WARNING LABEL (LC0005/LB1119N)	1.000 EA
NP1256L	ALUM UL CSA CC INDUSTRIAL MOTOR A60	1.000 EA
34PA1002	PKG GRP, PRINT PK1001A01	1.000 EA

Parts List (continued)

Part Number	Description	Quantity
MN416A01	TAG-INSTAL-MAINT no wire (1200/bx) 5/18	1.000 EA

No performance data has been assigned to this product.

33LY0870

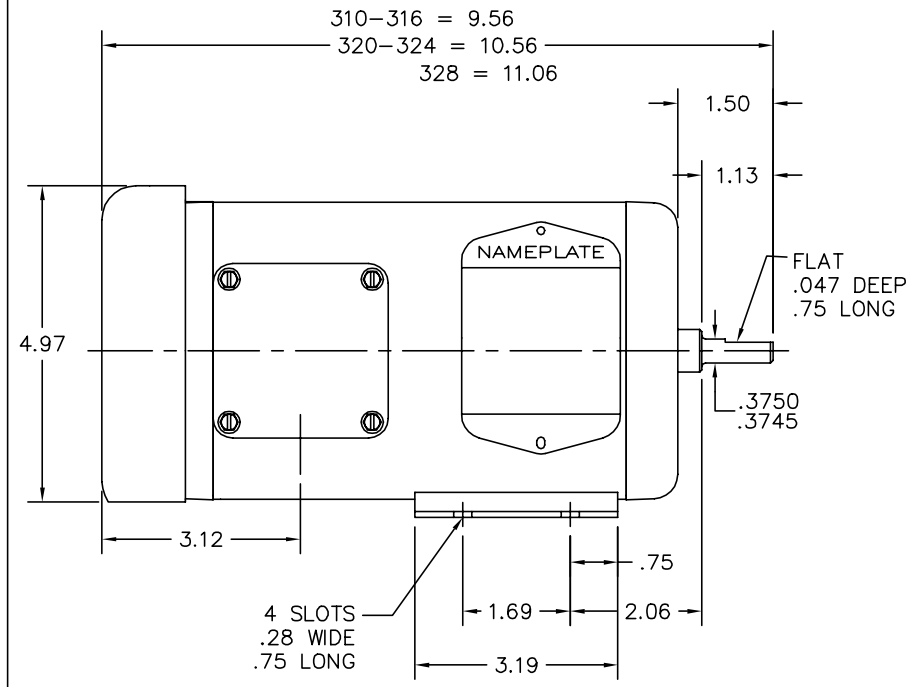

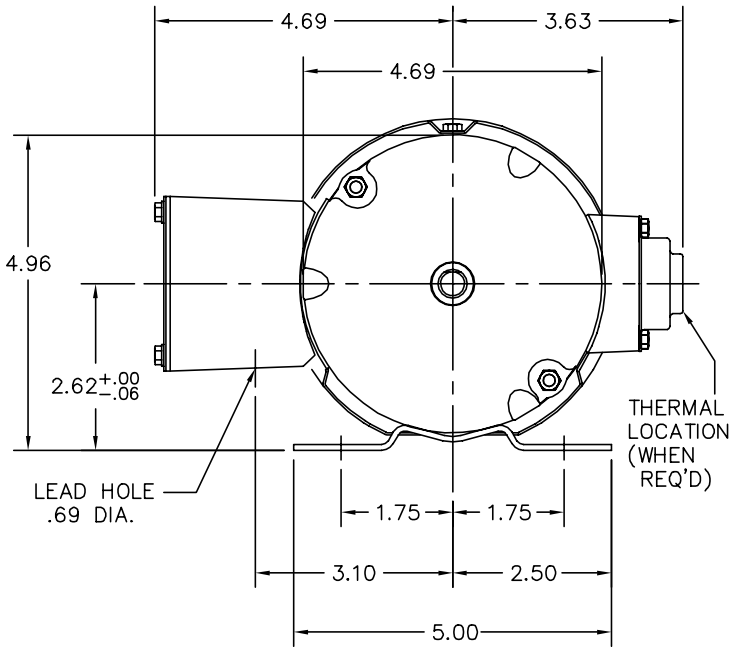

CUSTOMER IS RESPONSIBLE FOR DETERMINING THAT MOTOR PERFORMANCE IS SUITABLE IN THE APPLICATION.

REV. DESC: UPDATED KOBX & LID			BALDOR ELECTRIC Co.
REV. LTR: L	VERSION: 01	TDR: 000000426983	
33LY0870	FILE: \AAA\00001\052	REVISED: 09:30:20 04/09/2007	STD HORZ MODEL 33M NEMA 42 TEFC
	MTL: –	BY: ENROST0	

33LY0870

CD0005A05

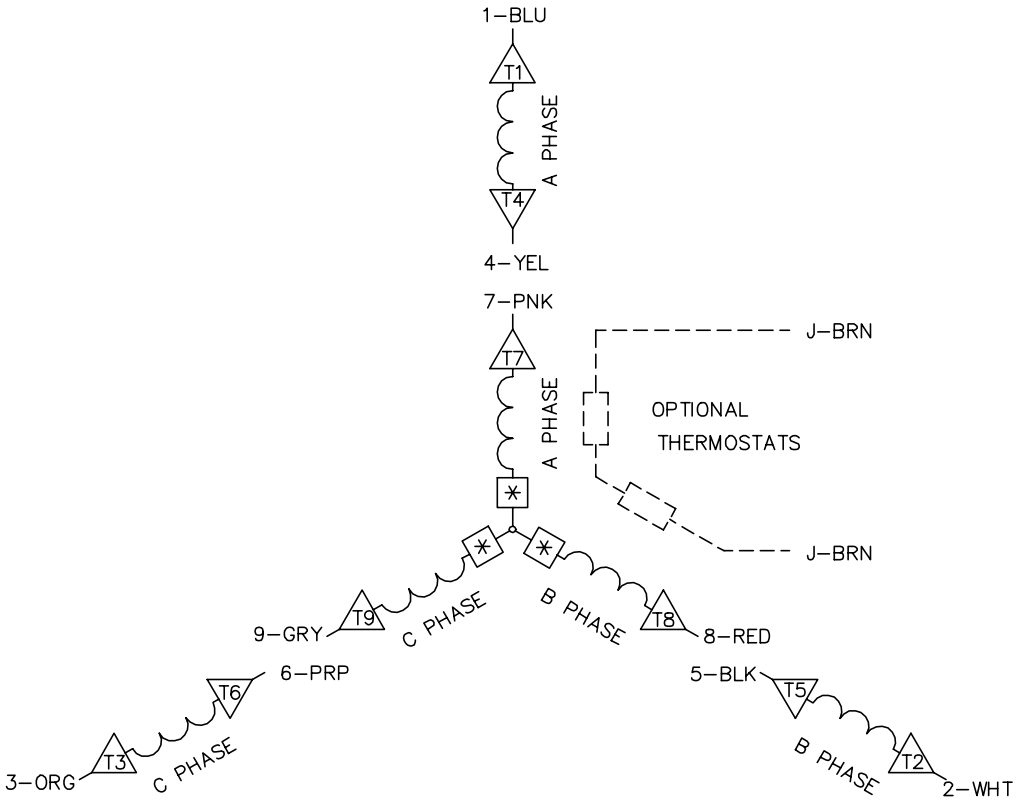

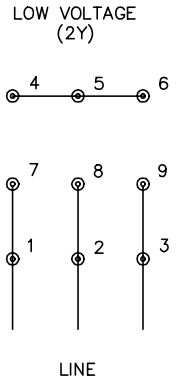

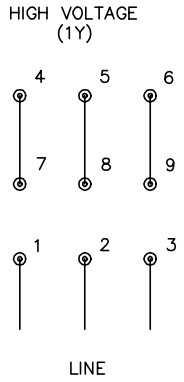

NOTES:

1. INTERCHANGE ANY TWO LINE LEADS TO REVERSE ROTATION.
2. OPTIONAL THERMOSTATS ARE PROVIDED WHEN SPECIFIED.
3. ACTUAL NUMBER OF INTERNAL PARALLEL CIRCUITS MAY BE A MULTIPLE OF THOSE SHOWN ABOVE.
4. LEAD COLORS ARE OPTIONAL. LEADS MUST ALWAYS BE NUMBERED AS SHOWN.
5. △# =MAGNET WIRE COIL END WITH I.D. NUMBER.
6. [*] =MAGNET WIRE COIL END WITH I.D. SYMBOL.
7. SEE CW PRINT FOR NEST TO NEST CROSSOVER CONNECTIONS.

REV. DESC: ADD NEST NOTE			BALDOR • DODGE • RELIANCE
REV. LTR: C	VERSION: 03	TDR: 000000445597	
CD0005A05	FILE: \CKA\00024\847	REVISED: 12:51:06 11/15/2007	3PH, DV, 9 LEADS, CK
	MTL: –	BY: CKMICRO	

CD0005A05