

MTA4207 Screw Conveyor Reducer

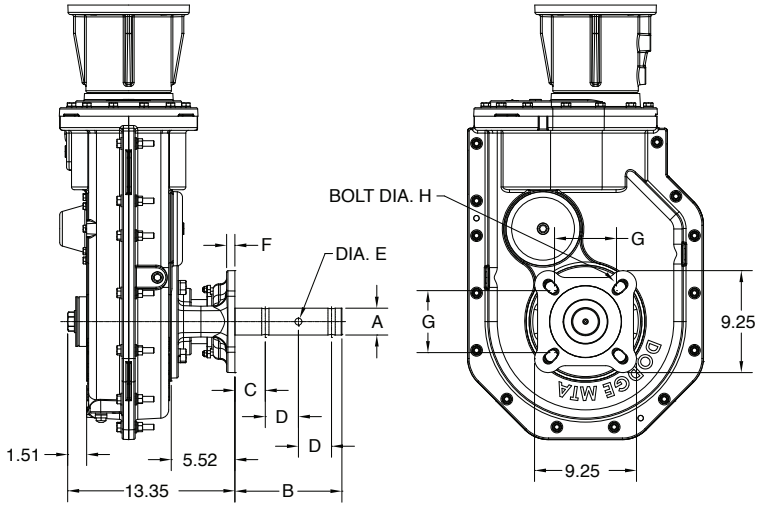

TA4207H Screw Conveyor Drive Dimensions

Screw Dia	Drive Shaft Dia A	Dimensions						
		B	C	D	Hole Dia E	F	G	Bolt Dia H
9, 12	2	9.00	2.13	3.00	21/32	0.75	5.13	5/8
12, 14	2-7/16	9.69	2.75	3.00	21/32	0.75	5.63	5/8
12, 14, 16, 18, 20	3	9.88	2.88	3.00	25/32	0.75	6.00	3/4
18, 20, 24	3-7/16	13.13	3.88	4.00	29/32	0.75	6.75	3/4