Options & Accessories Sizes 107-608

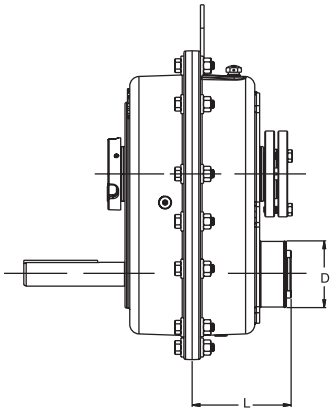

Size 107-315

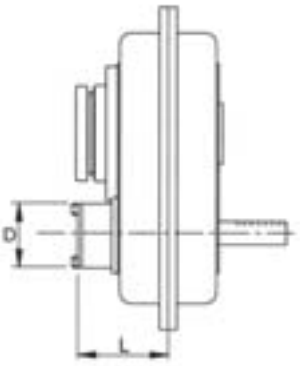

Size 407-608



BACKSTOP KITS

Table No. 34

REDUCER SIZE	USE BACKSTOP KIT		DIMENSIONS		WT. LBS.
	PART NO.	RATIOS	D	L	
107	107BSP	ALL	3.000	4.336	2.4
115	115-203BSP		3.438	4.573	3.1
203			3.438	5.100	3.1
207	207BSP		4.750	5.695	7.4
215	215-307BSP		5.000	6.230	8.4
307			5.000	6.770	8.4
315	315BSP		6.000	7.780	16.2
407	407BSP		6.125	6.625	10.0
415	415BSP		6.815	7.500	13.0
507	507BSP		7.625	7.969	15.0
608	608BSP		8.375	9.500	17.0



TORQUE ARM KITS

Table No. 35

REDUCER SIZE	PART NO.
107	107TAP
115	115TAP
203	203TAP
207	207TAP
215	215TAP
307	307TAP
315	315TAP
407	407TAP
415	415TAP
507	507TAP
608	608TAP