Belt Guards Unit Sizes 107-315

Belt guard assemblies consist of a guard with mounting brackets included. These belt guards may also be used with screw conveyor drives as shown on pages 84 through 89. Belt guard standard color is yellow.

Plated fasteners providing protection in outdoor applications are supplied with the guard assembly.

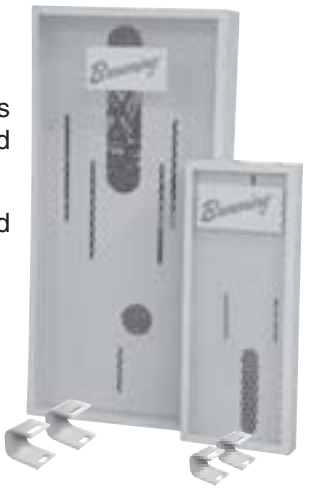

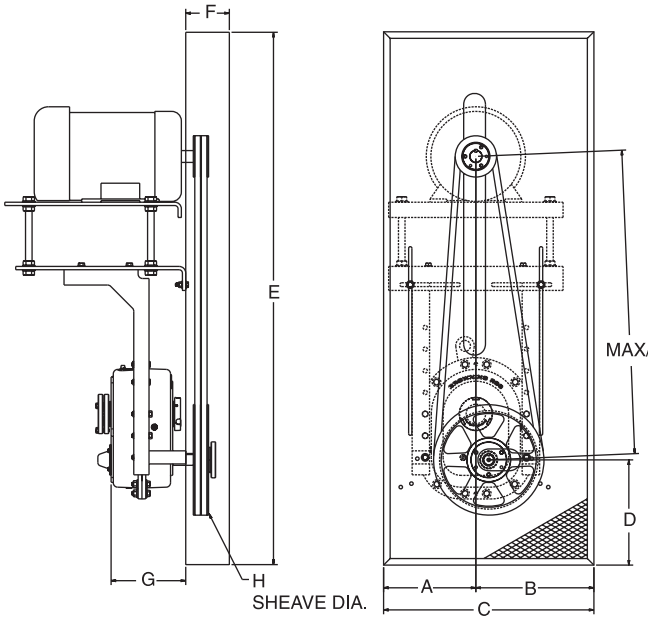

TOP MOUNT

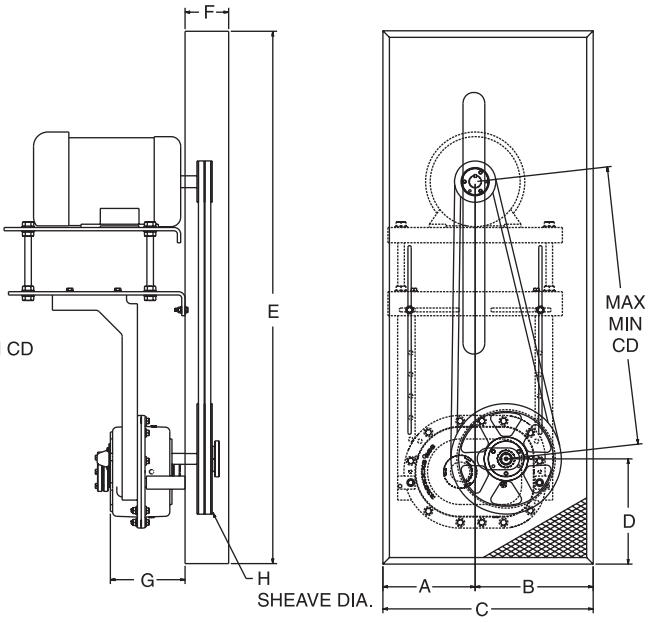

SIDE MOUNT

Table No. 25

SHAFT MOUNT SIZE	BELT GUARD PART NO.	DIMENSIONS IN INCHES											
		TOP MOUNT CENTER DISTANCE		SIDE MOUNT CENTER DISTANCE		A	B	C	D	E	F	G	H MAX.
		MIN.	MAX.	MIN.	MAX.								
107	BGP1	14.71	34.80	10.95	32.74	7.88	10.24	18.12	9.06	50.12	5.00	7.56	14.00
115		16.50	34.99	10.96	32.74	7.71	10.41					7.86	
203	BGP2	17.70	36.56	12.66	33.71	10.58	13.54	24.12	12.06	61.12	5.50	9.05	23.00
207		19.59	40.41	13.33	37.34	10.43	13.69					9.25	
215	BGP3	23.00	43.17	12.89	39.41	11.44	15.68	27.12	13.56	65.12	5.50	10.23	
307	BGP4	24.56	48.38	17.16	44.63	15.38	19.75	35.12	14.00	77.12	6.50	11.81	27.00
315		25.57	50.05	17.16	45.34	14.94	20.18					13.43	