

TOP VIEW

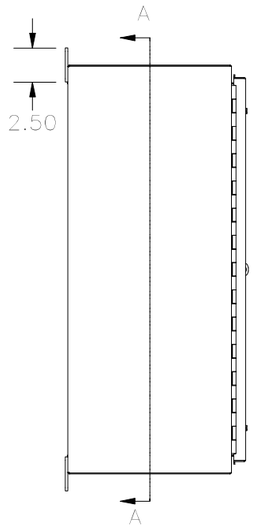

LEFT SIDE

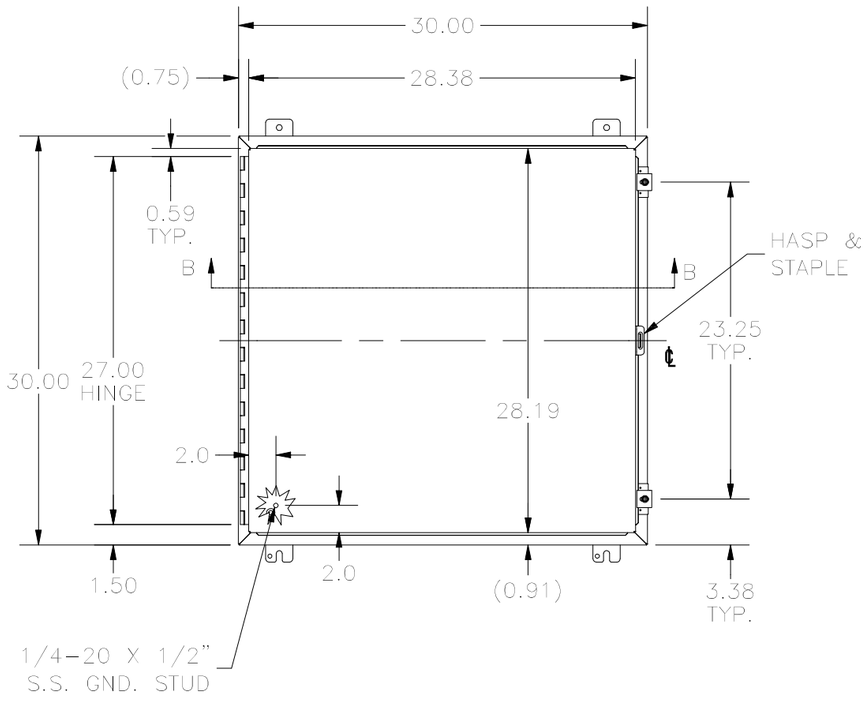

FRONT VIEW

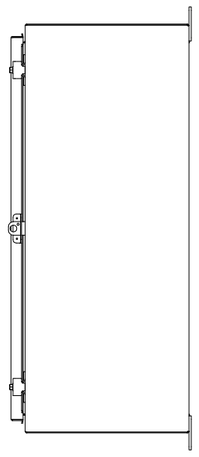

RIGHT VIEW

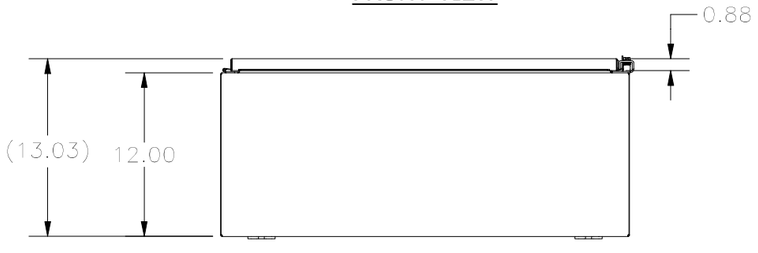

BOTTOM VIEW

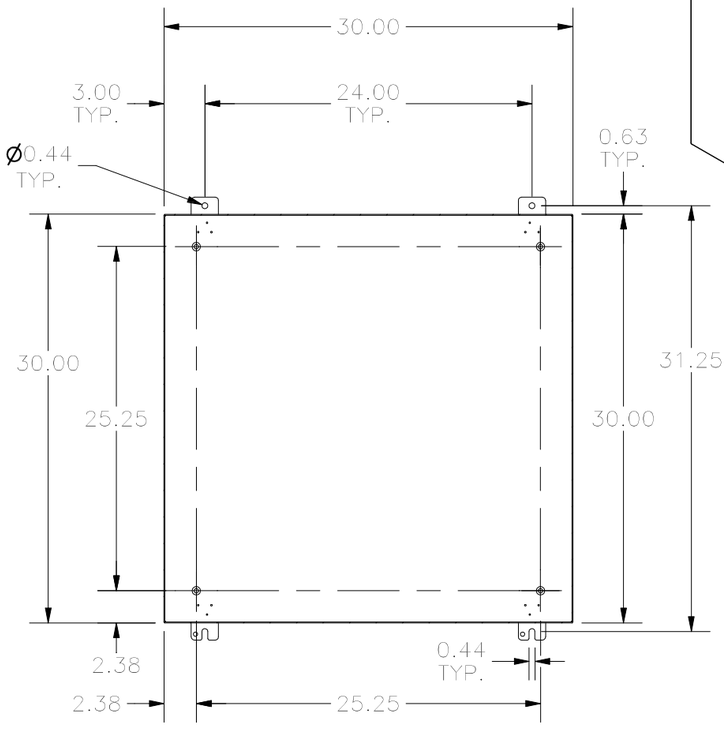

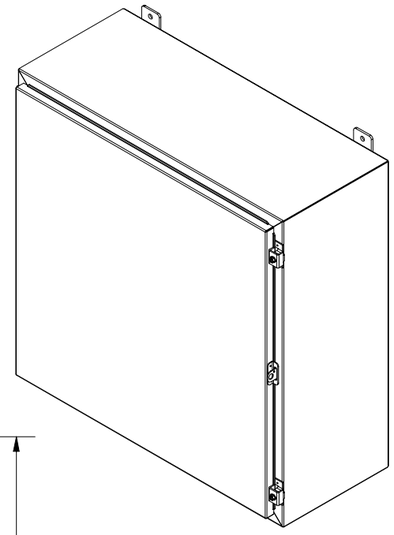

SECTION A-A

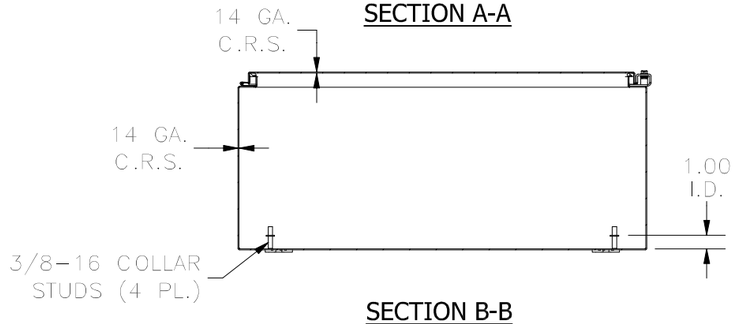

SECTION B-B

PART#: N12303012
(DATA SUBJECT TO CHANGE WITHOUT NOTICE)

THIS DRAWING IS PROPERTY OF HUBBELL INC. WIEGMANN
ALL INFORMATION IS PROPRIETARY AND NOT TO BE DUPLICATED