

TOP VIEW

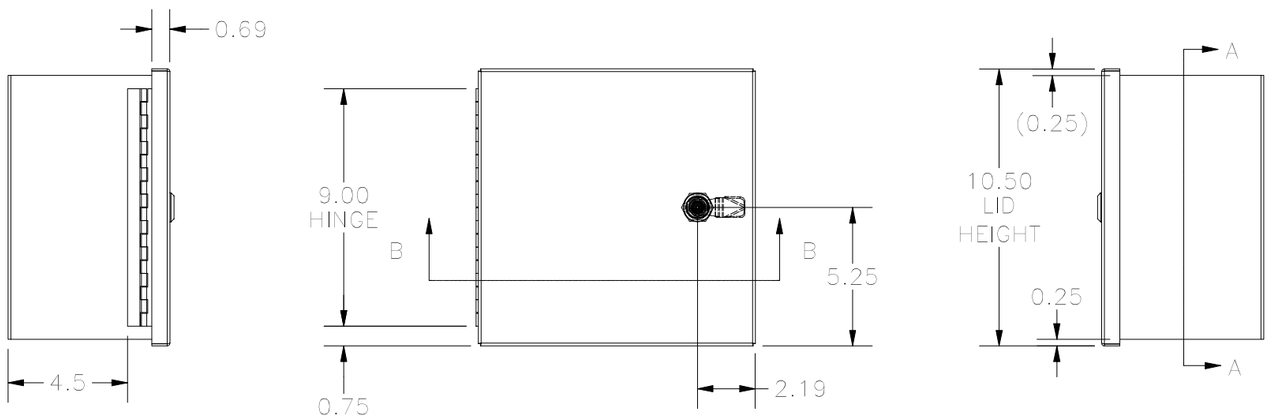

LEFT SIDE VIEW

FRONT VIEW

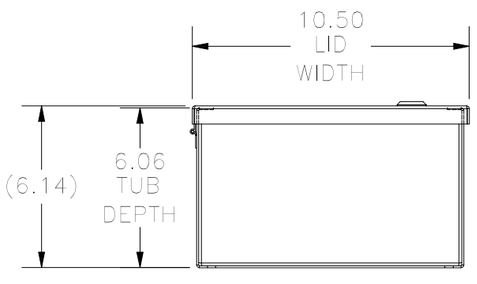

BOTTOM VIEW

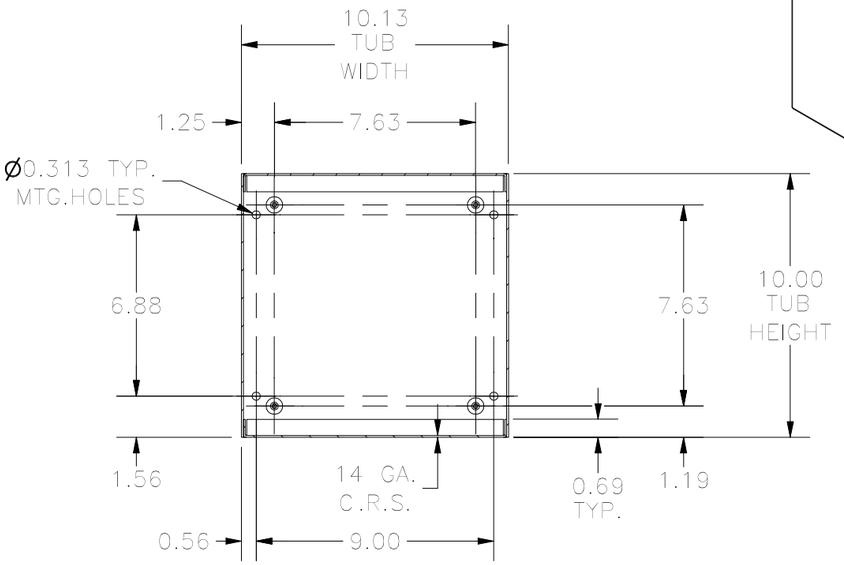

SECTION A-A VIEW
(INSIDE BACK OF ENCL.)

RIGHT SIDE VIEW

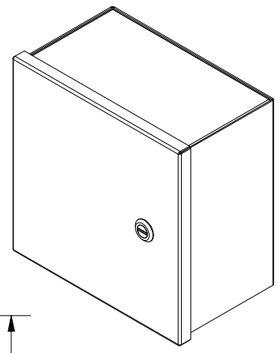

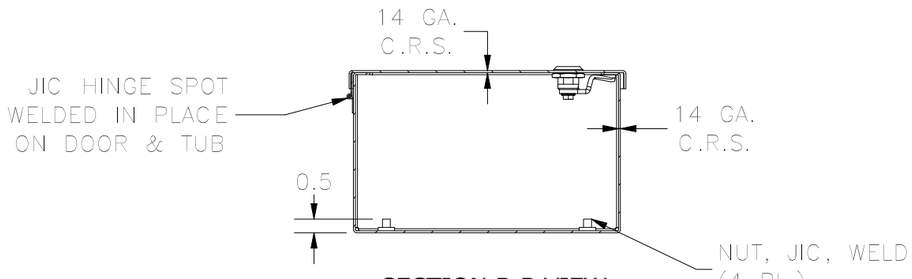

SECTION B-B VIEW
(INSIDE TOP OF ENCL.)

PART#: N1C101006
(DATA SUBJECT TO CHANGE WITHOUT NOTICE)

THIS DRAWING IS PROPERTY OF HUBBELL INC. WIEGMANN
ALL INFORMATION IS PROPRIETARY AND NOT TO BE DUPLICATED