

LEFT SIDE VIEW

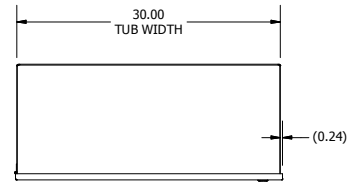

TOP VIEW

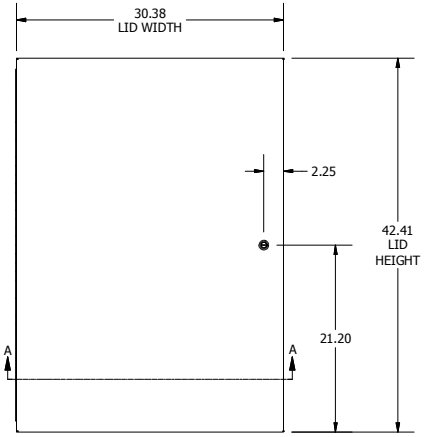

FRONT VIEW

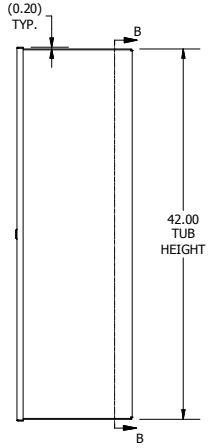

RIGHT SIDE VIEW

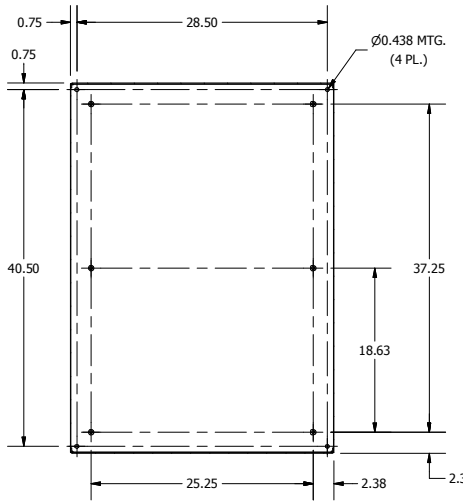

SECTION B-B
(INSIDE BACK OF ENCL.)

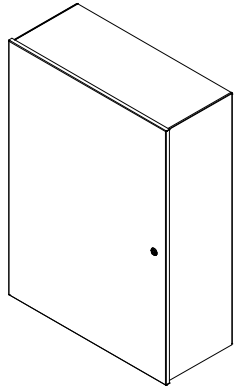

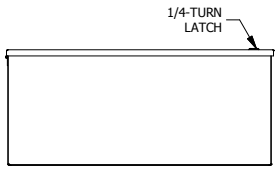

BOTTOM VIEW

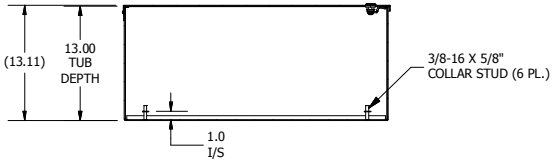

SECTION A-A
(INSIDE TOP OF ENCL.)

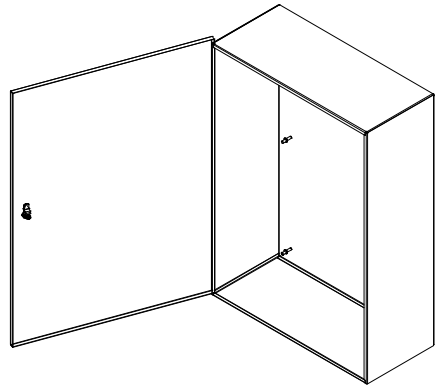

PART#: N1C304213
(DATA SUBJECT TO CHANGE WITHOUT NOTICE)

THIS DRAWING IS PROPERTY OF HUBBELL INC. WIEGMANN
ALL INFORMATION IS PROPRIETARY AND NOT TO BE DUPLICATED