

TOP VIEW

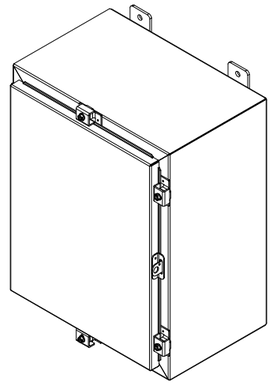

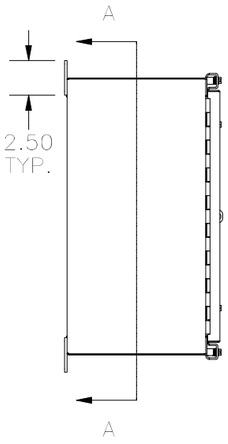

LEFT SIDE

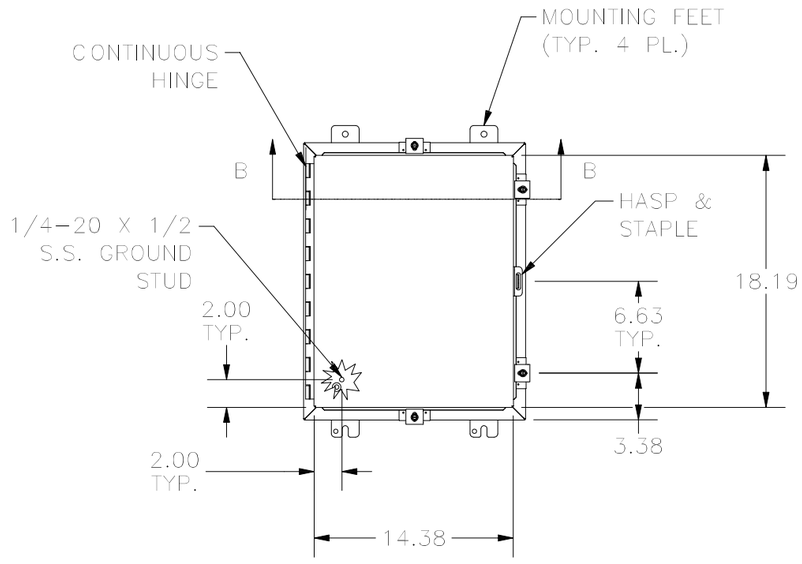

FRONT VIEW

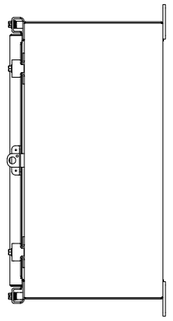

RIGHT VIEW

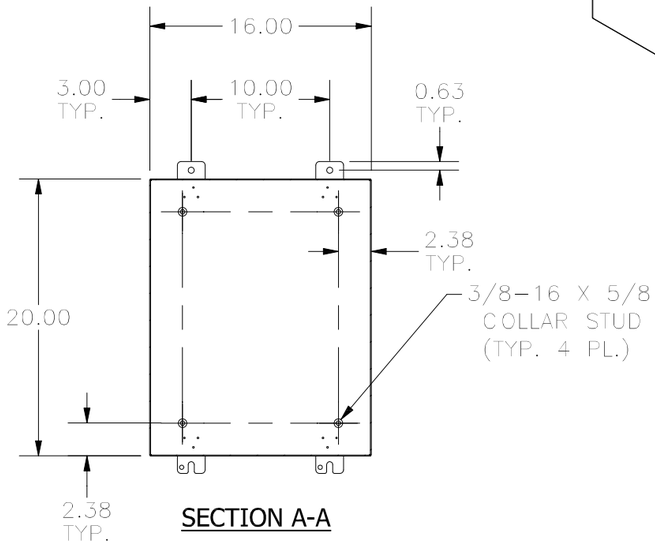

SECTION A-A

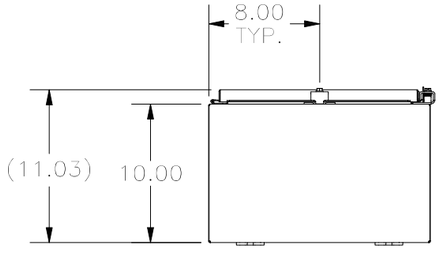

BOTTOM VIEW

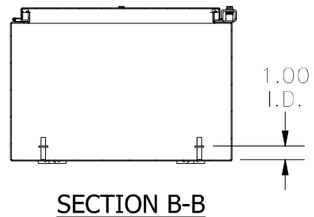

SECTION B-B

PART#: N4201610
(DATA SUBJECT TO CHANGE WITHOUT NOTICE)

THIS DRAWING IS PROPERTY OF HUBBELL INC. WIEGMANN
ALL INFORMATION IS PROPRIETARY AND NOT TO BE DUPLICATED