


TOP VIEW

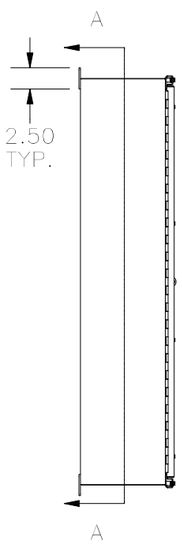


LEFT SIDE

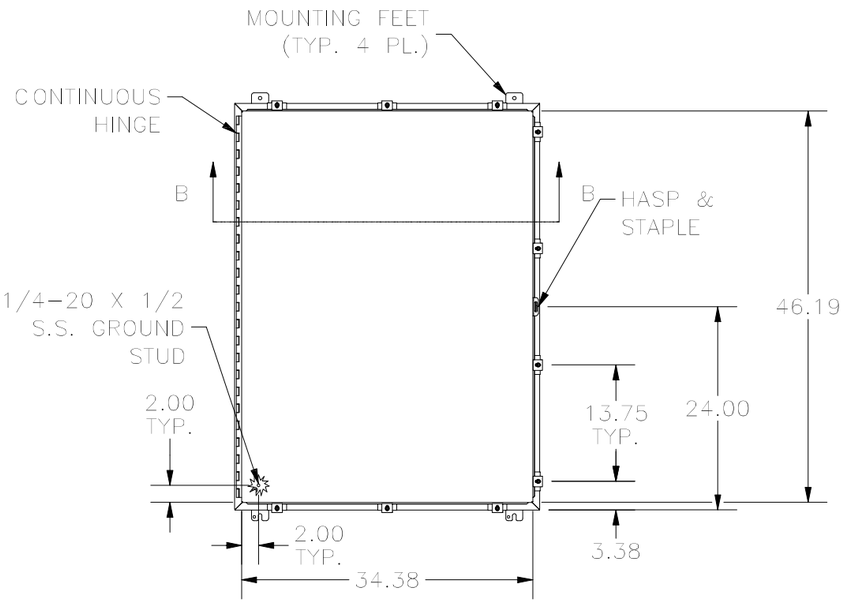


FRONT VIEW

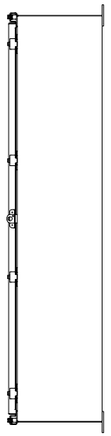

RIGHT SIDE

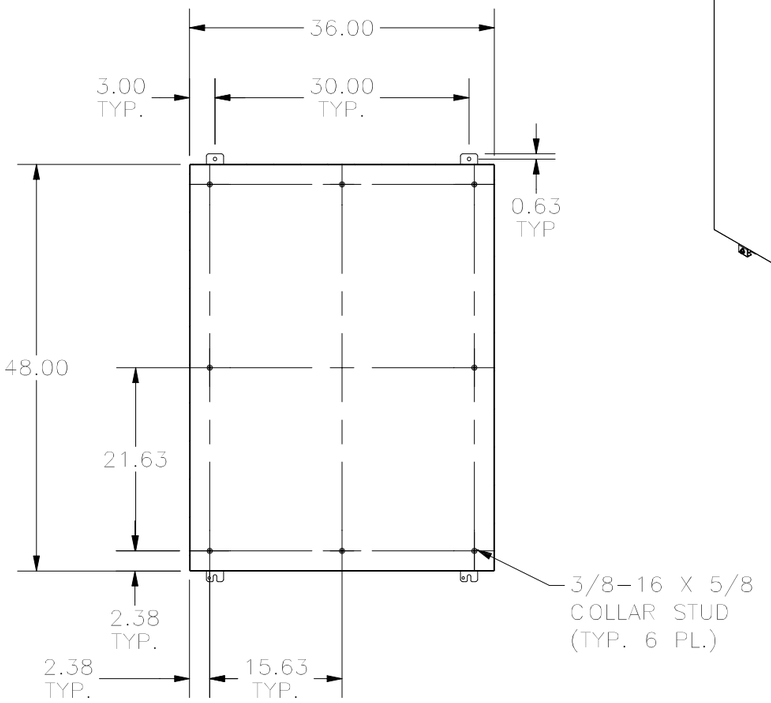


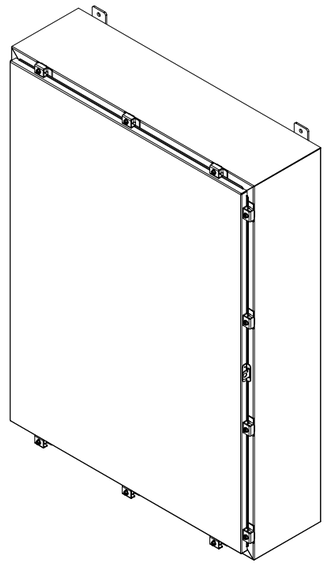

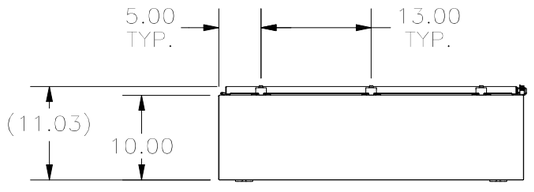


BOTTOM VIEW

SECTION A-A
(INSIDE BACK OF TUB)

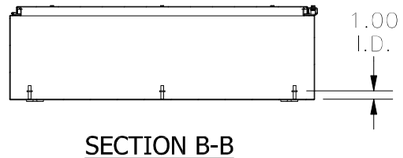


SECTION B-B
(INSIDE TOP OF ENCLOSURE)

PART#: N4483610
(DATA SUBJECT TO CHANGE WITHOUT NOTICE)

THIS DRAWING IS PROPERTY OF HUBBELL INC. WIEGMANN
ALL INFORMATION IS PROPRIETARY AND NOT TO BE DUPLICATED