

TOP VIEW

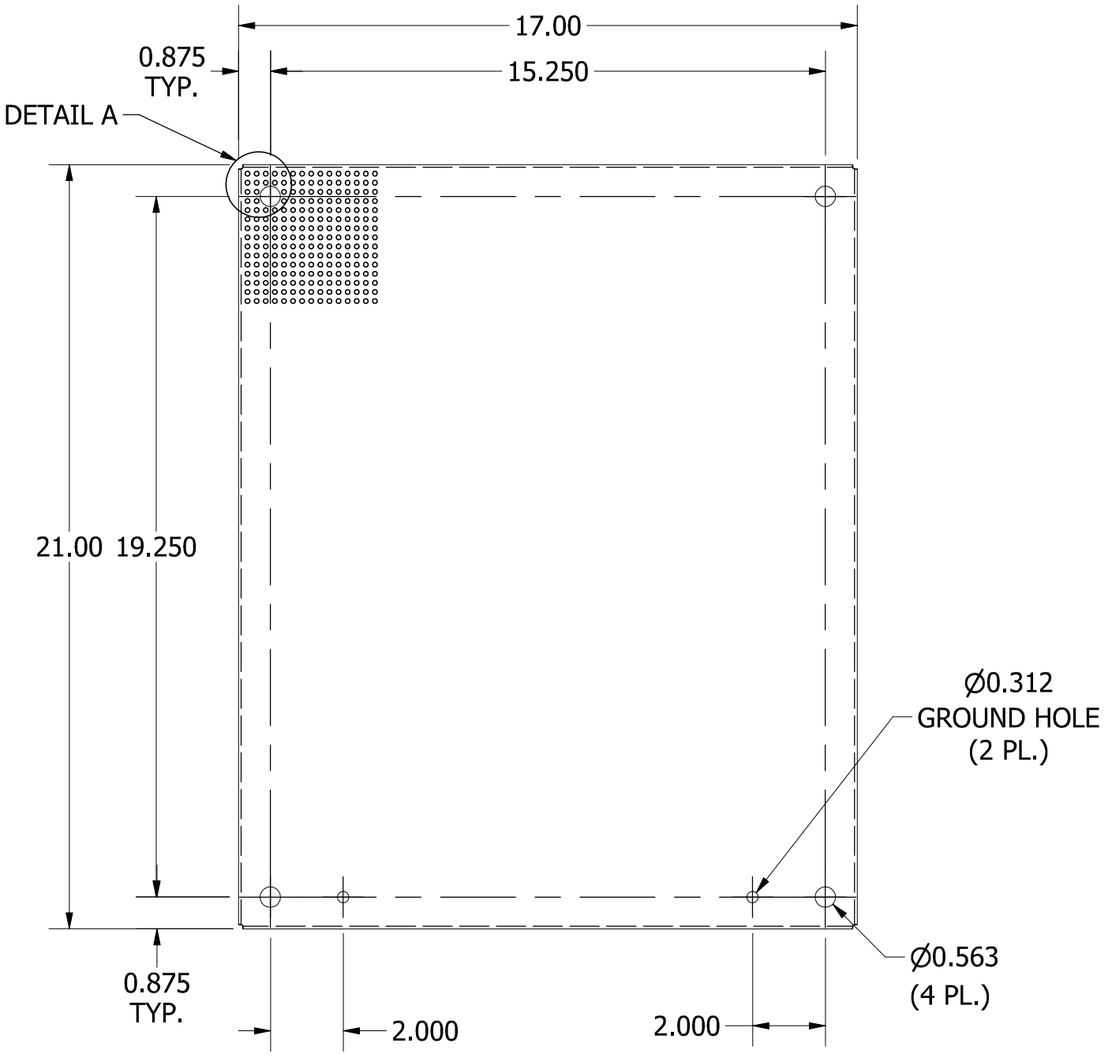

FRONT VIEW

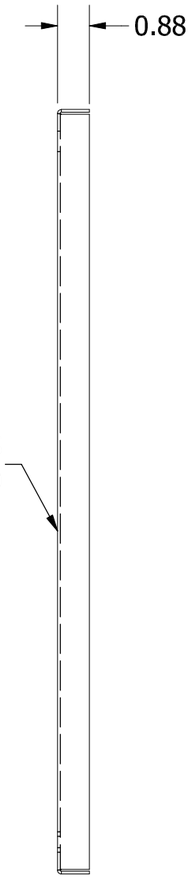

SIDE VIEW

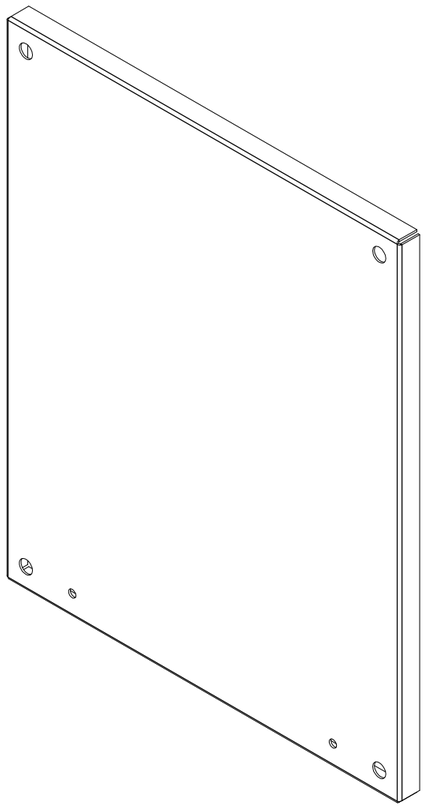

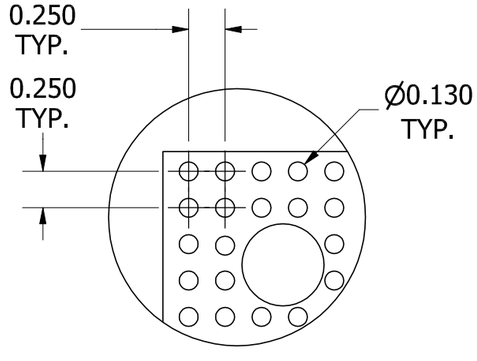

DETAIL-A
(PERFORATED DETAIL)

PART#: NP2420PP
(DATA SUBJECT TO CHANGE WITHOUT NOTICE)

THIS DRAWING IS PROPERTY OF HUBBELL INC. WIEGMANN
ALL INFORMATION IS PROPRIETARY AND NOT TO BE DUPLICATED