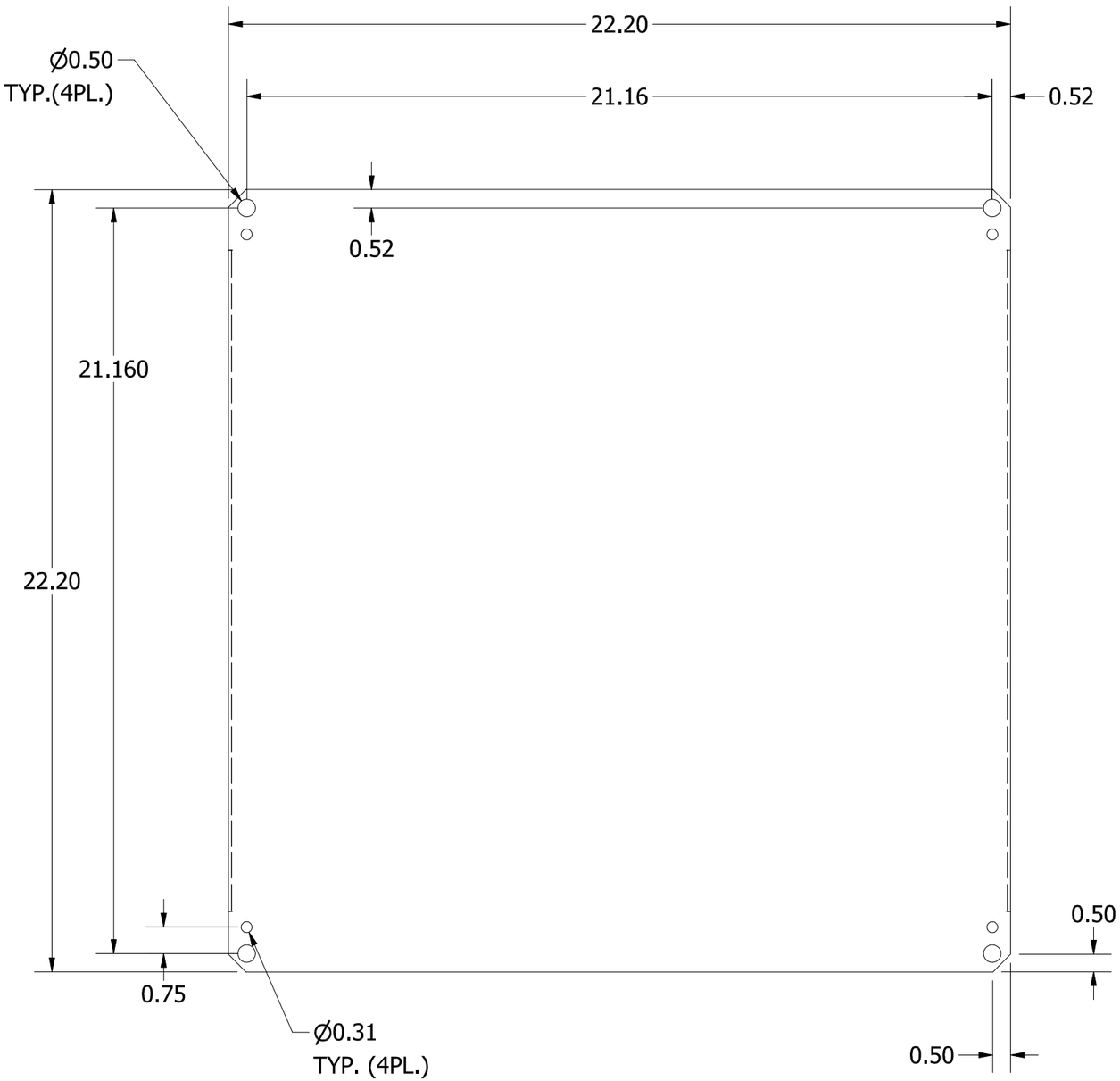

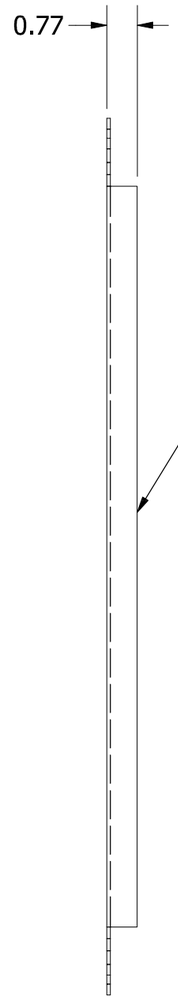

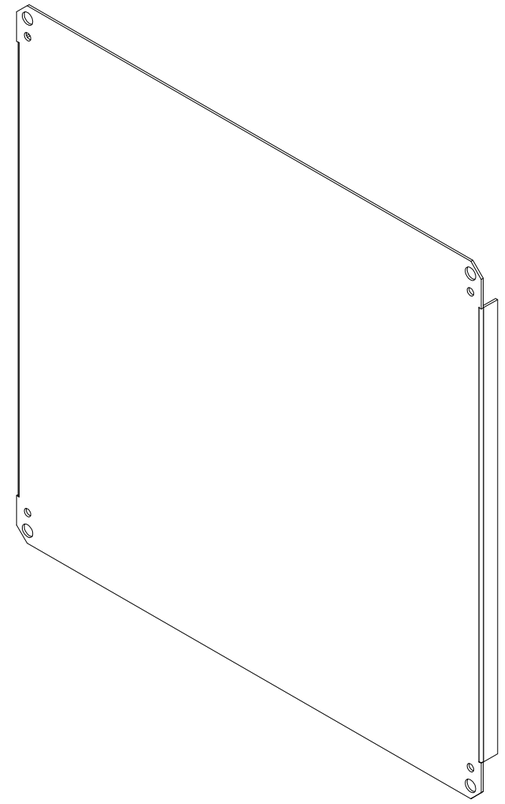

PART#: NP2424C
(DATA SUBJECT TO CHANGE WITHOUT NOTICE)
THIS DRAWING AND COMPONENTS OF ARE
PROPERTY OF HUBBELL INC. WIEGMANN