

TOP VIEW

PART#: NP4236G
(DATA SUBJECT TO CHANGE WITHOUT NOTICE)

THIS DRAWING IS PROPERTY OF HUBBELL INC. WIEGMANN
ALL INFORMATION IS PROPRIETARY AND NOT TO BE DUPLICATED

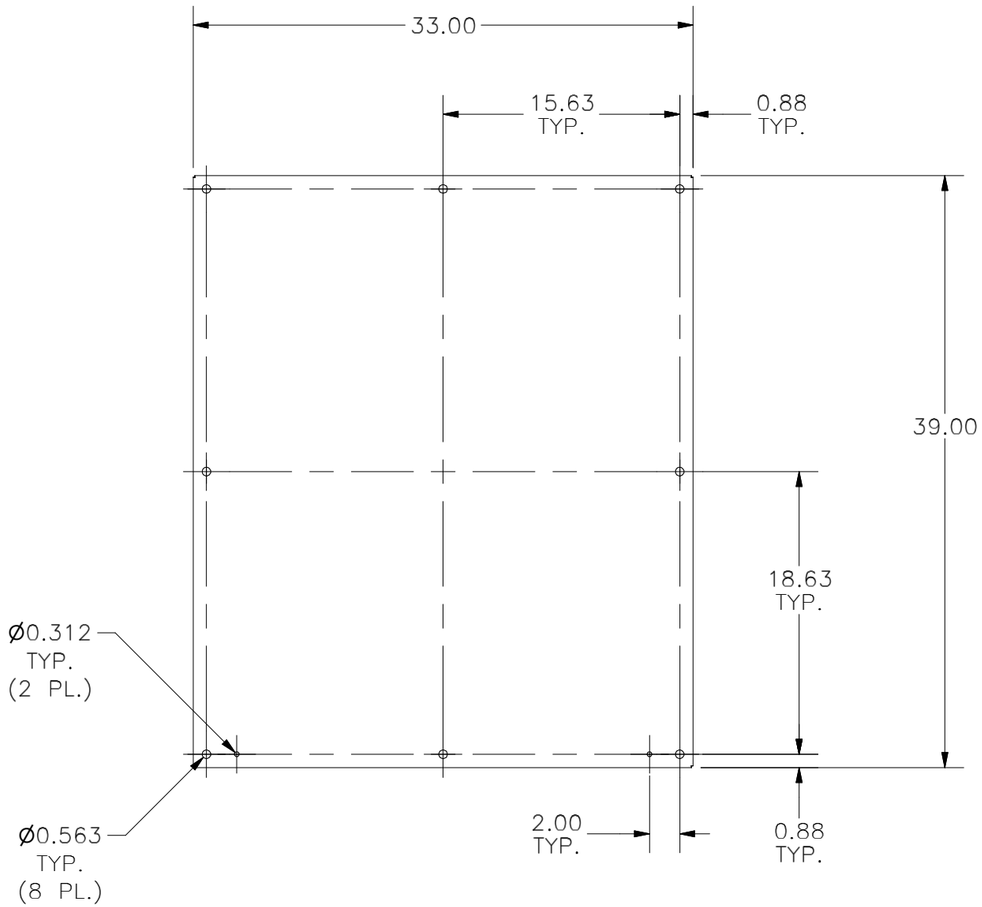

FRONT VIEW

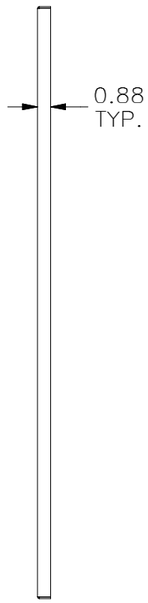

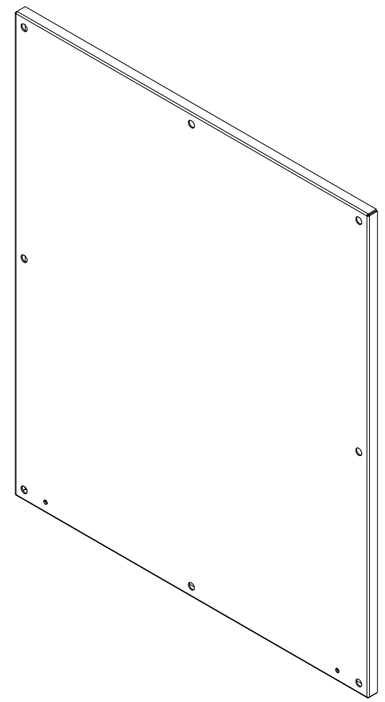

SIDE VIEW