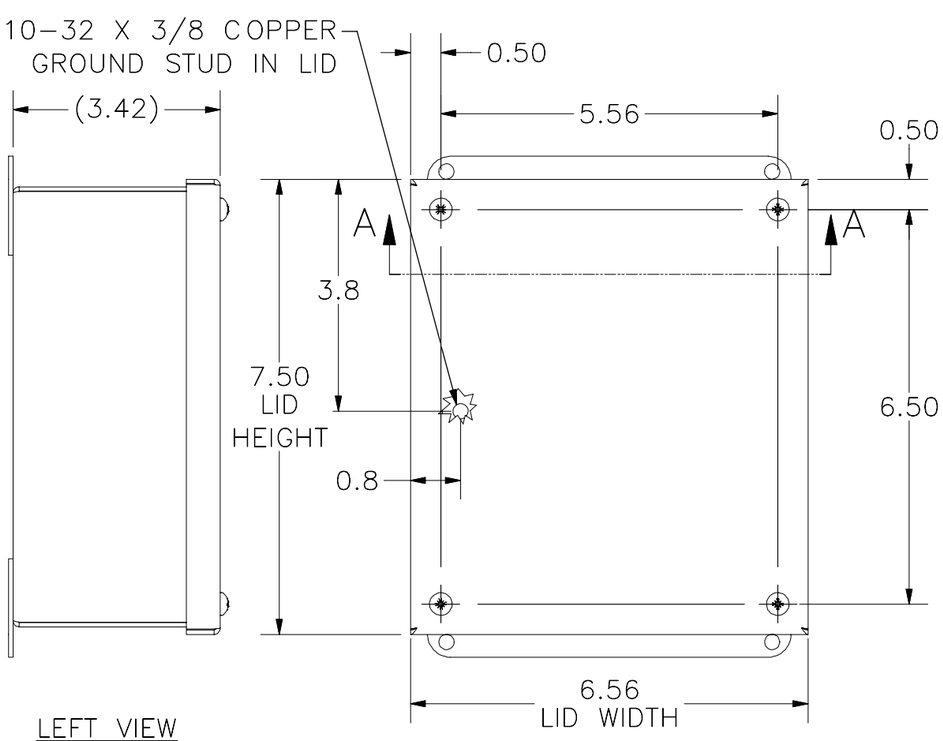

LEFT VIEW

FRONT VIEW

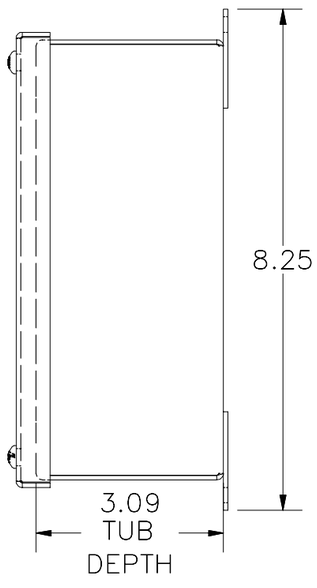

RIGHT VIEW

FRONT VIEW TUB

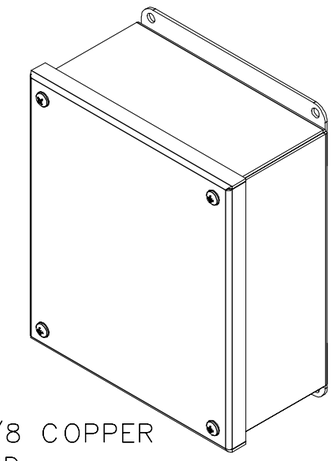

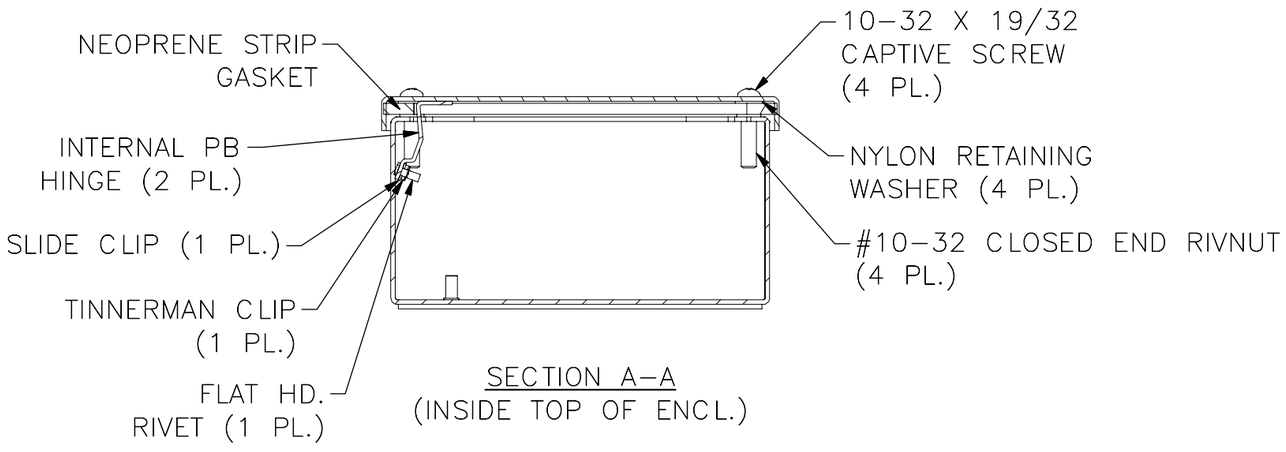

SECTION A–A
(INSIDE TOP OF ENCL.)

PART#: PB4SBC
(DATA SUBJECT TO CHANGE WITHOUT NOTICE)

THIS DRAWING IS PROPERTY OF HUBBELL INC. WIEGMANN
ALL INFORMATION IS PROPRIETARY AND NOT TO BE DUPLICATED