PHASE-A-MATIC™

1-800-962-6976

ROTARY PHASE CONVERTER

220V models & 460V models available. See chart.

RUNS THREE-PHASE EQUIPMENT FROM SINGLE-PHASE POWER SOURCE



MODEL
R-5 SHOWN

- **HEAVILY LOADED APPLICATIONS**
- **QUIET OPERATION**
- **SIMPLE INSTALLATION**
- **MULTI-MOTOR OPERATION**
- **MULTI-SPEED APPLICATIONS**
- **RESISTIVE LOAD APPLICATIONS**
- **NO CHANGING MOTORS OR SWITCH GEAR**
- **4 YEAR WARRANTY**

USES INCLUDE: *Metalworking and woodworking equipment, farm equipment, pumps, compressors, elevators, transmitters, printing equipment, food processing equipment, computers, sewing machines, air conditioners, hoists, extractors, wheel balancers, EDM machines, rectifiers, lasers, conveyors and just about any 3-phase equipment. For CNC/PLC equipment use our CNC PACKAGE PHASE CONVERTER. Ask for our CNC PAC brochure.*

- For long heavy starting loads, instant reversing, momentarily overloaded motors, or imported equipment, contact factory or refer to application guidelines RTN, or find it on our web site at www.phase-a-matic.com/RotaryApplicationNotes.htm.

- **Multiple motor applications:** Due to the high in-rush current required to start a motor (5 to 10 times the normal running current), most applications require sizing the HP of the Rotary Converter 50% larger, **or more** than the horsepower of the largest motor, or any combination of motors started at exactly the same time. The first motor started, **if not running heavily loaded,** generates additional 3-phase power back into the circuit. You can then run additional motors (not heavily loaded and not all started at the same time). A maximum of up to 3 times the HP rating of the Rotary Converter can run at the same time, if not heavily loaded, and not started simultaneously. For example, a 30 HP Rotary Converter potentially could run motors totaling up to 90 HP. Contact factory for verification of sizing.

Rotary Converter Models*

220V "R" Models	460V "RH" Models	HP	Shipping Wt. Lbs.
R-1	- - -	1	22
R-2	- - -	2	40
R-3	- - -	3	63
R-5	RH-5	5	70
R-7	- - -	7.5	106
R-10	RH-10	10	120
R-15	RH-15	15	202
R-20	RH-20	20	220
R-25	- - -	25	290
R-30	RH-30	30	306
R-40	RH-40	40	405
R-50	RH-50	50	445
R-75	RH-75	75	665
R-100	RH-100	100	880

*WEATHERPROOF and KW models also available.

- Causes no interference to radio, television, or computer equipment.
- For 50Hz operation consult factory
- F.O.B. Palmdale, California
- For larger sizes, contact factory

PHASE-A-MATIC, INC.
39360 3rd St. E., Suite 301 · Palmdale, Ca. 93550-3255
Toll Free 800-962-6976 · Local: 661-947-8485
FAX 661-947-8764 · Email: info@phase-a-matic.com
www.phase-a-matic.com

© PHASE-A-MATIC, INC. 2017
FORM NO. RB-2017

PHASE-A-MATIC™

ROTARY PHASE CONVERTER INSTRUCTION SHEET

CAUTION: ALWAYS START CONVERTER BEFORE APPLYING LOAD

1. Magnetic controls or **single-phase** loads (including electronics, microprocessors, etc.) must always be energized by lines T1 and T2.
2. Never connect a ground or neutral to line T3 (manufactured phase), which can easily be identified as the line with the highest voltage to ground with the converter running. Properly ground all electrical equipment.
3. It is essential that careful consideration be given to your wiring length and size to prevent slow starting due to a voltage drop. Consult the National Electrical Code for proper wire sizing.
4. Due to the high starting current (in-rush current) common to electric motors, a drop of starting torque may occur when using a converter that is too small. Because of this, it is NOT advised to size an application HP for HP. The vast majority of applications require sizing the converter 50% larger *or more* than the largest HP rated motor of your equipment. Contact Phase-A-Matic, Inc. for further details.

MODEL		LARGEST MOTOR HP See #1 below	MULTIPLE MOTORS LIGHTLY LOADED See #2 below	ROTARY CONVERTER IDLE CURRENT AMPERAGE (Approximate)		DISCONNECT SWITCH TIME DELAY FUSE AMPERAGE		NEMA STARTER SIZE		MAGNETIC STARTER THERMALS OVERLOADS AMPERAGE		MINIMUM SINGLE-PHASE SUPPLY BREAKER AMPS See #3 below		SHIPPING DIMENSIONS In inches
220V	460V	220V/460V	220V/460V	220V	460V	220V	460V	220V	460V	220V	460V	220V	460V	220V/460V
R-1	- - -	1	3 HP	1.5	- - -	10	- - -	00	- - -	4.8	- - -	15	- - -	15 x 10 x 10
R-2	- - -	2	6 HP	2	- - -	10	- - -	0	- - -	7.7	- - -	15	- - -	15 x 10 x 10
R-3	- - -	3	9 HP	2.5	- - -	15	- - -	0	- - -	10.4	- - -	20	- - -	19 x 12 x 13
R-5	RH-5	5	15 HP	3	1.5	30	15	1	1	15.9	8	30	15	19 x 12 x 13
R-7	- - -	7.5	22 HP	5	- - -	40	- - -	1	- - -	26	- - -	40	- - -	16 x 16 x 16
R-10	RH-10	10	30 HP	7	3.5	45	30	2	2	35	17.5	60	30	16 x 16 x 16
R-15	RH-15	15	45 HP	8	4	60	30	3	2	48	24	100	50	31 x 24 x 21
R-20	RH-20	20	60 HP	10	5	80	40	3	2	63	35	125	60	31 x 24 x 21
R-25	- - -	25	75 HP	11	- - -	100	- - -	3	- - -	80	- - -	160	- - -	31 x 24 x 21
R-30	RH-30	30	90 HP	12	6	125	60	3	3	94	48	200	100	31 x 24 x 21
R-40	RH-40	40	120 HP	13	8	150	80	4	3	117	63	250	125	31 x 24 x 24
R-50	RH-50	50	150 HP	15	9	200	100	5	3	145	78	300	150	31 x 24 x 24
R-75	RH-75	75	225 HP	29	15	300	150	5	4	235	115	375	200	31 x 24 x 24
R-100	RH-100	100	300 HP	48	24	400	200	5	4	300	150	600	300	41 x 41 x 33

1. LARGEST MOTOR HP: Almost all machines require sizing the converter 50% larger or more than the largest HP motor of your machine. See #4 above.

2. MULTIPLE MOTORS LIGHTLY LOADED: HP shown in chart reflects maximum HP allowable under specific conditions. Example: Multiple machinery, not started at the same time, and that is running lightly loaded. For larger sizes consult factory.

3. MINIMUM SINGLE-PHASE SUPPLY: Single-phase supply shown is for absolute maximum output of the Rotary Converter. Most of the time the converter is oversized to provide the high starting current for the motor. It is not always necessary to size the single-phase breakers this large. Contact Phase-A-Matic for smaller single-phase breaker qualifications.

IMPORTANT: This chart is simplified and cannot reflect the many types of applications possible. Contact Phase-A-Matic, Inc. at 1-800-962-6976 to verify your phase converter requirements.

Larger horsepower phase converter systems may be obtained by connecting multiple Rotary Converters in parallel. This is necessary for models that are larger than 100 HP. Contact Phase-A-Matic, Inc. for wiring illustration for multiple units banked together. Or see it on our web site at: http://www.phase-a-matic.com/RotaryInstallation.htm.

5. Table shows approximate idle current at 230V for 220V models, 460V for 460V models. Higher line voltage will cause idle current to increase. Excessive amperage could also be caused by incorrect installation.
6. Lubricate every 12 months for normal operation, or every 6 months for continuous (24-hour) operation. Use high-temp bearing grease: "Exxon POLYREX®EM" polyurea grease or equivalent, available from Phase-A-Matic, Inc.
7. Voltage sensitive equipment (CNC/PLC, 3-phase powered electronics, etc.) may require a Phase-A-Matic™ Voltage Stabilizer designed to reduce phase voltage imbalance. Refer to Voltage Stabilizer brochure or call 1-800-962-6976.
8. Converter should reach full speed within 2 to 3 seconds.
9. Voltage is 220V single-phase in and 220V three-phase out on 220V models; 460V single-phase in and 460V three-phase out on 460V models.

CAUTION: Converters are intended for use in clean, dry locations with access to an adequate supply of cooling air. In addition, there should be protection from, or avoidance of, flammable or combustible materials in the area of converters as they can eject flame and/or metal in the event of an insulation failure.

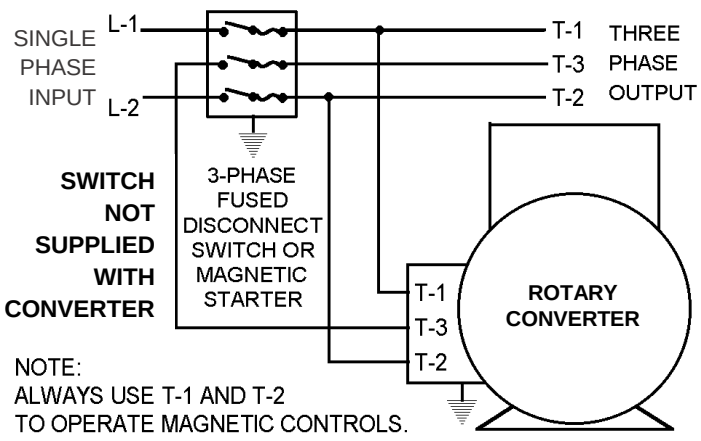

PHASE-A-MATIC, INC.
39360 3rd St. E., Suite 301, Palmdale, Ca. 93550-3255
Phone: 661-947-8485 FAX 661-947-8764
www.phase-a-matic.com Email: info@phase-a-matic.com
©2017 PHASE-A-MATIC, INC. RB-2017, Side 2