Tel +1 (717) 767-6511
Fax +1 (717) 764-0839
www.redlion.net

Bulletin No. ZPJ-C
Drawing No. LP0723
Released 03/14

MODELS ZPJ - LARGE THRU-BORE ROTARY PULSE GENERATOR



SPECIFICATIONS

ELECTRICAL SPECIFICATIONS

1. **SUPPLY VOLTAGE:** 4.75 to 28 VDC, 100 mA max.
2. **OUTPUTS:** NPN Open Collector Transistor, V_{OH} = 30 VDC max.; 20 mA max. current. Incremental - Two square waves in quadrature with A leading B for clockwise rotation.
3. **MAX. FREQUENCY:** 200 KHz
4. **INDEX:** NPN Open Collector Transistor, V_{OH} = 30 VDC max.; 20 mA max. current. Once per revolution centered over output Channel A. Index is a positive going pulse.
5. **NOISE IMMUNITY**: Tested to BS EN61000-6-2; BS EN50081-2; BS EN61000-4-2; BS EN61000-4-3; BS EN61000-4-6; BS EN55011
6. **SYMMETRY**: 180° (±18°) electrical
7. **QUAD PHASING**: 90° (±22.5°) electrical
8. **MIN EDGE SEP**: 67.5° electrical
9. **ACCURACY**: Within 0.01° mechanical from one cycle to any other cycle, or 0.6 arc minutes.

MECHANICAL SPECIFICATIONS

1. **MAXIMUM MECHANICAL SPEED**: 7500 RPM
2. **BORE SIZE:** 0.625" (15.875 mm)
3. **BORE TOLERANCES**: -0.0000"/+0.0006"
4. **USER SHAFT TOLERANCES**:
   Radial Runout: 0.007" max
   Axial Endplay: +/- 0.030" max
5. **STARTING TORQUE**: 2.5 oz-in (17.65 N-mm) IP64
6. **MOMENT OF INERTIA**:
   3.9 x 10^{-4} oz-in-sec^2 (27.5 gm-cm^2)
7. **MAX ACCELERATION:** 1 X 10^5 rad/sec^2
8. **ELECTRICAL CONNECTION**: 36" (914.4 mm) cable (foil and braid shield, 24 AWG conductors)

FUNCTION	WIRE COLOR
+VDC	Red
Common	Black
Data A	White
Data B	Green
Index Z	Orange

9. **HOUSING**: Non-corosive metal
10. **MOUNTING**: Flex arm 1.06" to 1.81" radius mounting
11. **WEIGHT**: 3.5 oz. typical (99.2 g)

ENVIRONMENTAL SPECIFICATIONS

1. **OPERATING TEMPERATURE**: 0°C to +70°C
2. **STORAGE TEMPERATURE**: -40°C to +100°C
3. **HUMIDITY**: 98% RH non-condensing
4. **VIBRATION**: 10 g @ 58 to 500 Hz
5. **SHOCK**: 50 g @ 11 msec duration
6. **SEALING**: IP64

GENERAL DESCRIPTION

The Model ZPJ ia a thru-bore encoder with a bore of 0.625" (15.875 mm). Additional mounting kits are available to adapt it to both standard and metric shaft sizes. This unit is ideal for applications requiring a miniature, high precision, low cost encoder, designed with all metal construction for years of trouble-free operation.

The ZPJ encoder has a flexible arm mount and blind hollow shaft. It uses two set screws that are 90° apart to clamp the encoder's hub to the motor shaft. The NPN Open Collector outputs are each current limited to 20 mA. The outputs are standard quadrature with index, and are available in resolutions up to 2500 pulses per shaft revolution. The quadrature separation is typically 90 electrical degrees. Output A leads output B for clockwise rotation of the encoder shaft.

SAFETY SUMMARY

All safety related regulations, local codes and instructions that appear in the literature or on equipment must be observed to ensure personal safety and to prevent damage to either the instrument or equipment connected to it. If equipment is used in a manner not specified by the manufacturer, the protection provided by the equipment may be impaired.

CAUTION: Risk of Danger.
Read complete instructions prior to installation and operation of the unit.

CAUTION: Risk of electric shock.

Open Collector Output Wiring

The ZPJ encoder has open collector outputs. An open collector output brings the uncommitted collector of the encoder switching device to the external world. Because the collector element is not associated with the sensor supply voltage, the sensor output collector may be “pulled up” to external voltages different than the encoder supply voltage (30 VDC maximum). NPN open collector outputs are current sinking devices. An output signal will not be generated unless a pull-up resistor is connected from the open-collector to the positive side of an external supply. The same supply can be used for powering the unit and for the pull-up resistor.

DIMENSIONS In inches (mm)

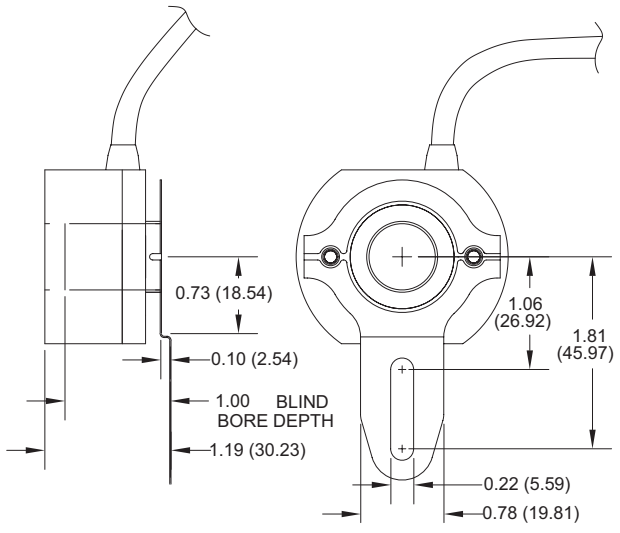

ORDERING INFORMATION

MODEL NO.	DESCRIPTION	PPR	PART NUMBER
ZPJ	0.625" Thru-Bore Rotary Pulse Generators	60	ZPJ0060A
		100	ZPJ0100A
		500	ZPJ0500A
		600	ZPJ0600A
		1000	ZPJ1000A
		1200	ZPJ1200A
		2000	ZPJ2000A
		2500	ZPJ2500A



Do not dispose of unit in trash - Recycle

ACCESSORIES

MODEL NO.	DESCRIPTION	PART NUMBER
RPGMK	1.575" (40 mm) Bolt Circle Flex Mount Kit	RPGMK000
	1.811" (46 mm) Bolt Circle Flex Mount Kit	RPGMK001
RPGBI	Inch Std Bore Insert Kit (includes 0.25, 0.375, and 0.50 inch sleeves)	RPGBII01
	Large Metric Bore Insert Kit (includes 11, 12, and 14 mm sleeves)	RPGBIM01
	Small Metric Bore Insert Kit (includes 6, 8, and 10 mm sleeves)	RPGBIM02
RPGMB	Mag Coupling Kit (0.625 inch shaft)	RPGMB001

Only factory stocked part numbers are listed. Consult Factory for part number and availability of other PPR and output configurations.

LIMITED WARRANTY

The Company warrants the products it manufactures against defects in materials and workmanship for a period limited to two years from the date of shipment, provided the products have been stored, handled, installed, and used under proper conditions. The Company's liability under this limited warranty shall extend only to the repair or replacement of a defective product, at The Company's option. The Company disclaims all liability for any affirmation, promise or representation with respect to the products.

The customer agrees to hold Red Lion Controls harmless from, defend, and indemnify RLC against damages, claims, and expenses arising out of subsequent sales of RLC products or products containing components manufactured by RLC and based upon personal injuries, deaths, property damage, lost profits, and other matters which Buyer, its employees, or sub-contractors are or may be to any extent liable, including without limitation penalties imposed by the Consumer Product Safety Act (P.L. 92-573) and liability imposed upon any person pursuant to the Magnuson-Moss Warranty Act (P.L. 93-637), as now in effect or as amended hereafter.

No warranties expressed or implied are created with respect to The Company's products except those expressly contained herein. The Customer acknowledges the disclaimers and limitations contained herein and relies on no other warranties or affirmations.

Red Lion Controls
Headquarters
20 Willow Springs Circle
York PA 17406
Tel +1 (717) 767-6511
Fax +1 (717) 764-0839

Red Lion Controls
Europe
Softwareweg 9
NL - 3821 BN Amersfoort
Tel +31 (0) 334 723 225
Fax +31 (0) 334 893 793

Red Lion Controls
India
201-B, 2nd Floor, Park Centra
Opp 32 Mile Stone, Sector-30
Gurgaon-122002 Haryana, India
Tel +91 984 487 0503

Red Lion Controls
China
Unit 302, XinAn Plaza
Building 13, No.99 Tianzhou Road
ShangHai, P.R. China 200223
Tel +86 21 6113 3688
Fax +86 21 6113 3683