

TOP VIEW

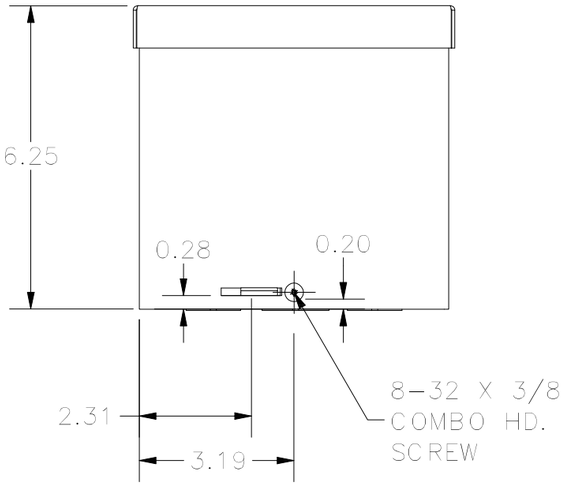

FRONT VIEW

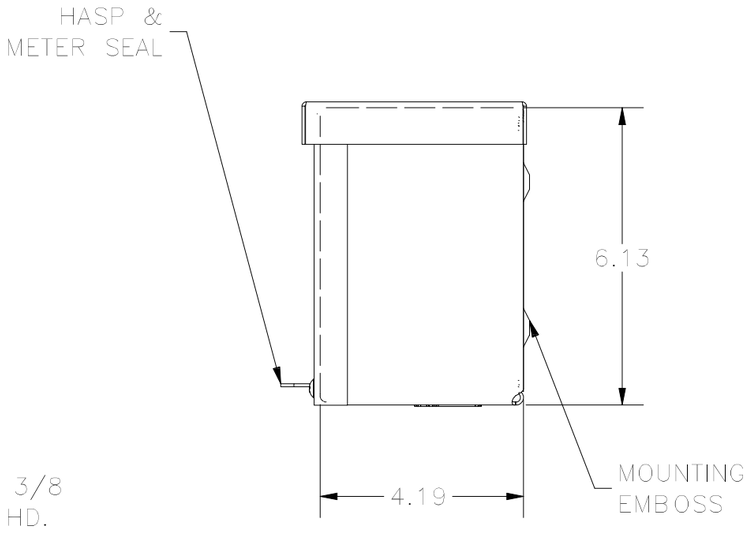

RIGHT VIEW

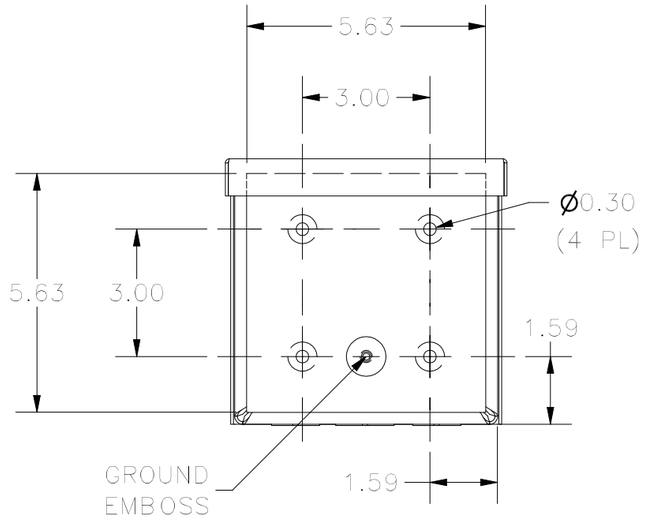

BACK VIEW

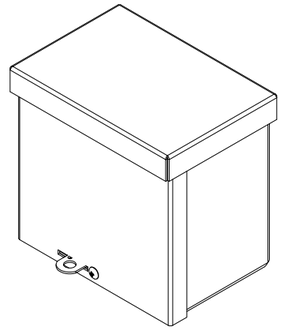

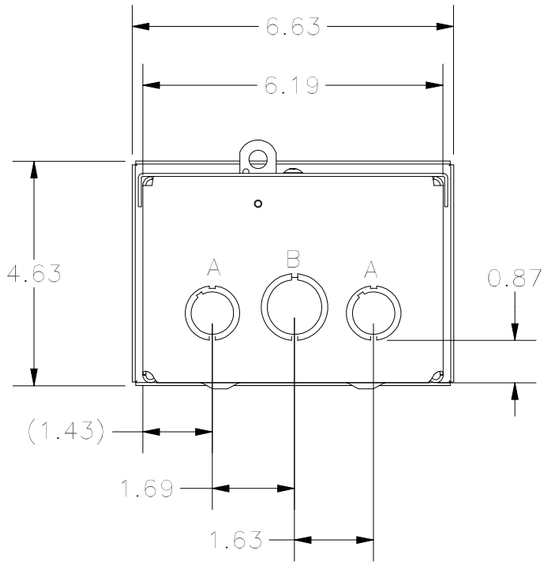

BOTTOM VIEW

KNOCK OUT SIZE	
LETTER	SIZES
A	1/2" TO 3/4"
B	3/4" TO 1"
F	1" TO 1-1/4"

PART#: RSC060604G
(DATA SUBJECT TO CHANGE WITHOUT NOTICE)

THIS DRAWING IS PROPERTY OF HUBBELL INC. WIEGMANN
ALL INFORMATION IS PROPRIETARY AND NOT TO BE DUPLICATED