

TOP VIEW

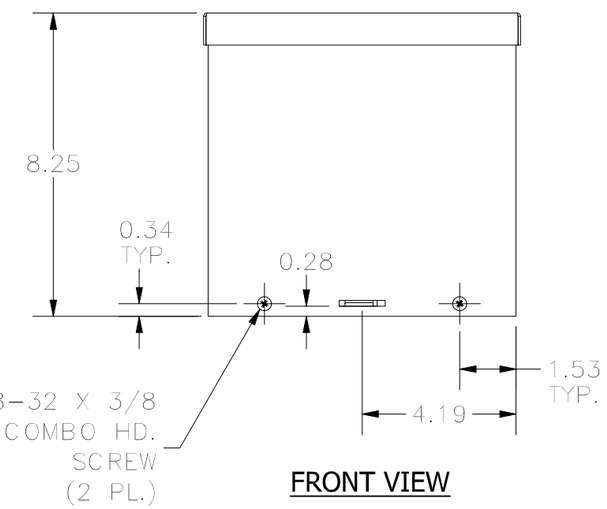


FRONT VIEW

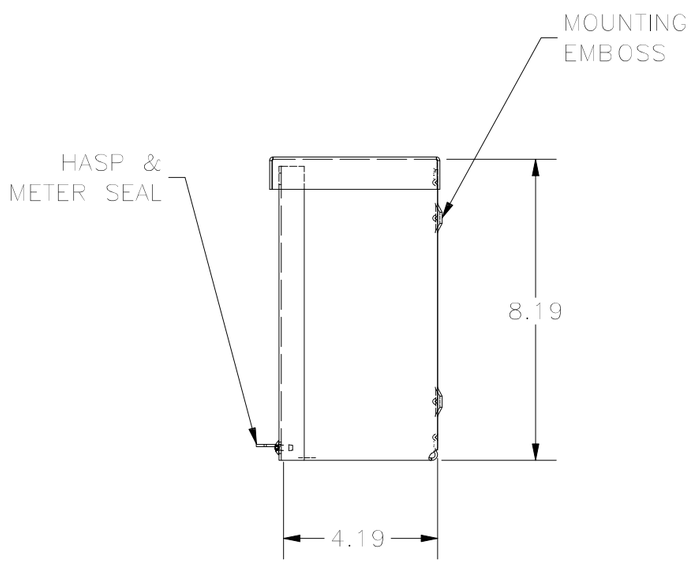


RIGHT VIEW

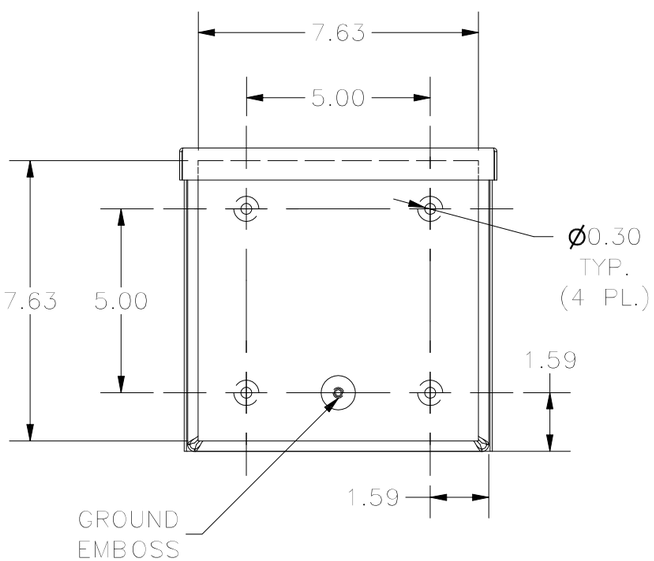


BACK VIEW

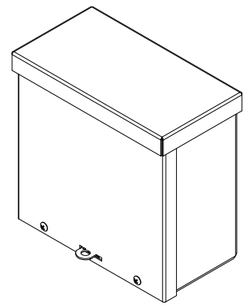

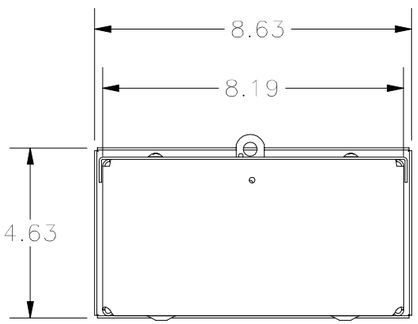


BOTTOM VIEW

PART#: RSC080804NK
(DATA SUBJECT TO CHANGE WITHOUT NOTICE)

THIS DRAWING IS PROPERTY OF HUBBELL INC. WIEGMANN
ALL INFORMATION IS PROPRIETARY AND NOT TO BE DUPLICATED