

TOP VIEW

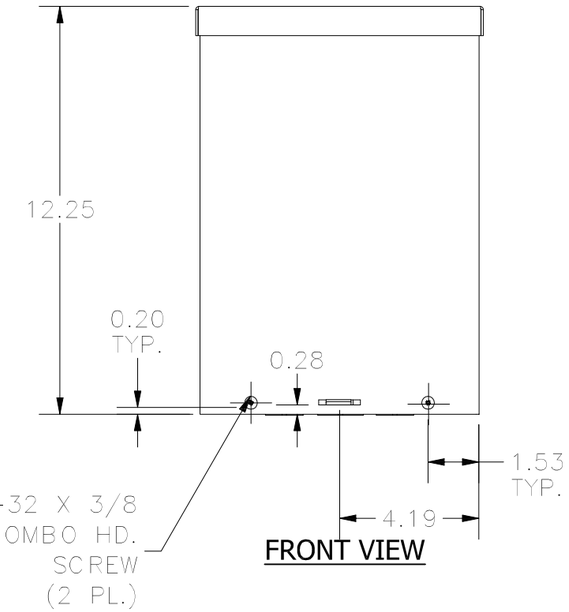

FRONT VIEW

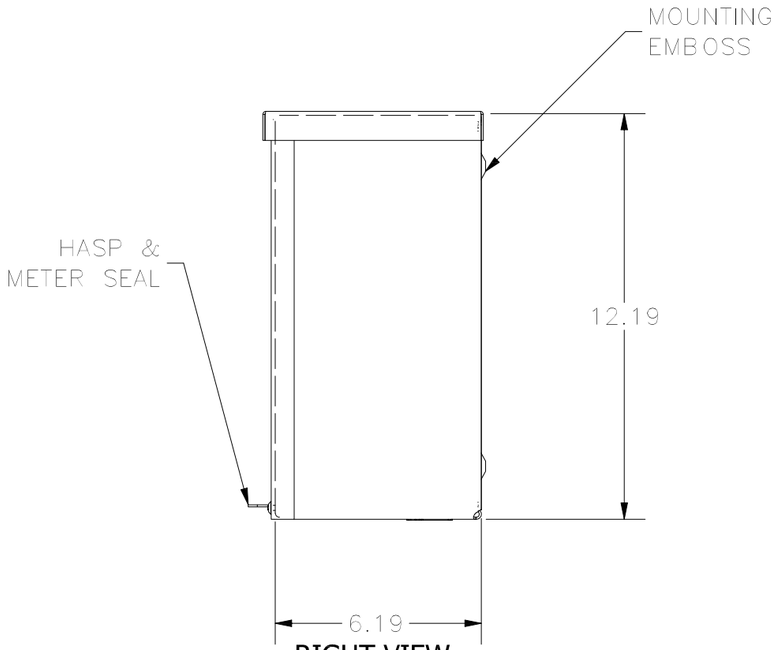

RIGHT VIEW

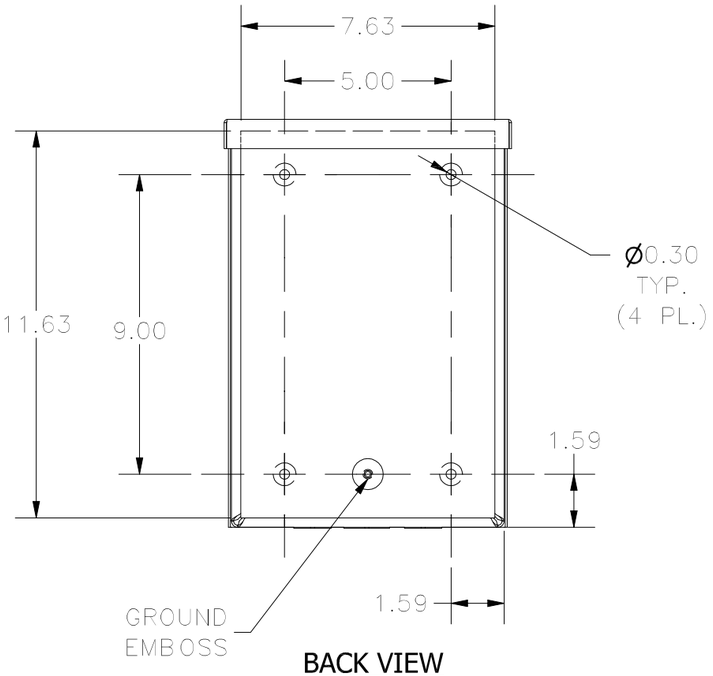

BACK VIEW

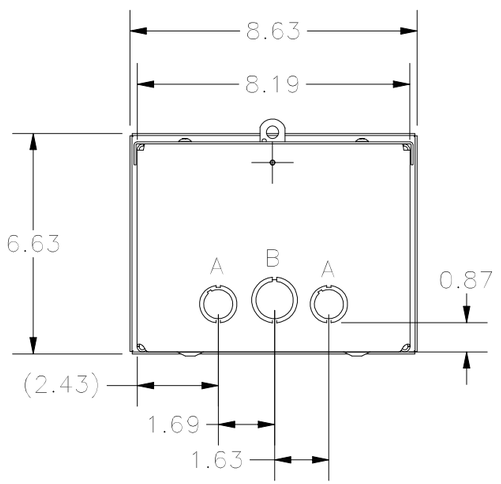

BOTTOM VIEW

KNOCK OUT SIZE	
LETTER	SIZES
A	1/2" TO 3/4"
B	3/4" TO 1"
F	1" TO 1-1/4"

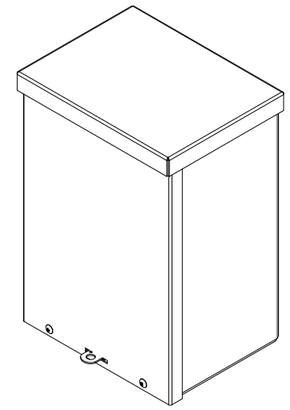

PART#: RSC081206G
(DATA SUBJECT TO CHANGE WITHOUT NOTICE)

NOTES-
1. FABRICATED FROM 16 GA. GALVANIZED
2. HASP/ METER SEAL PROVISION PROVIDED
3. GROUND EMBOSS INSIDE BACK OF ENCLOSURE