

TOP VIEW

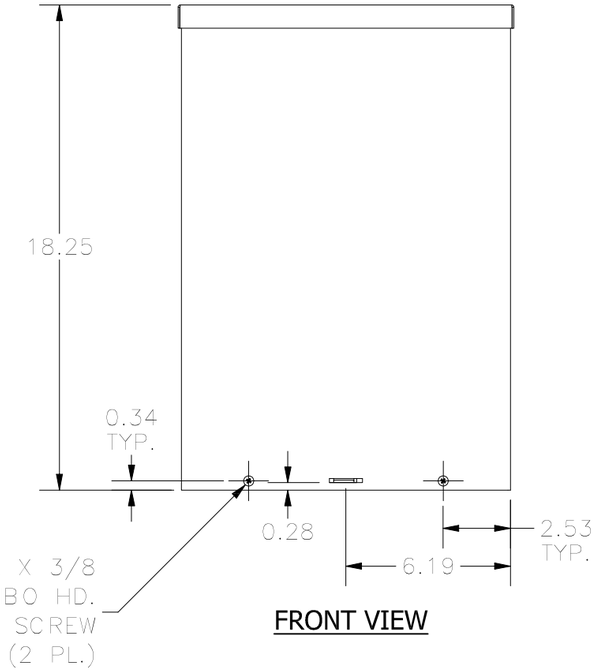

FRONT VIEW

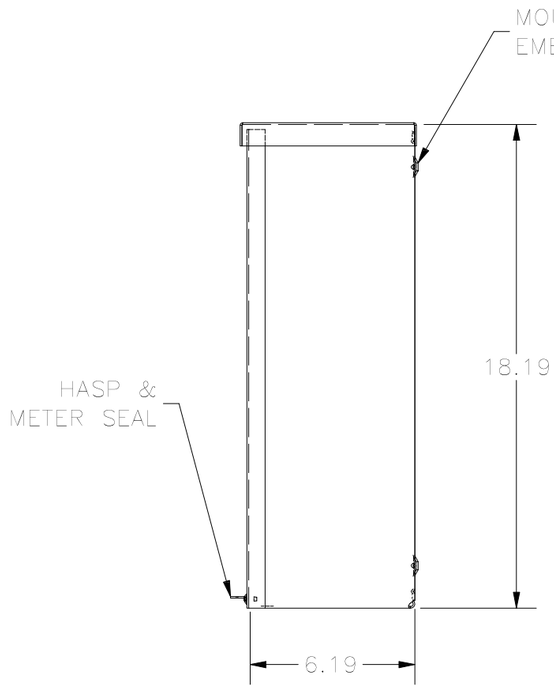

RIGHT VIEW

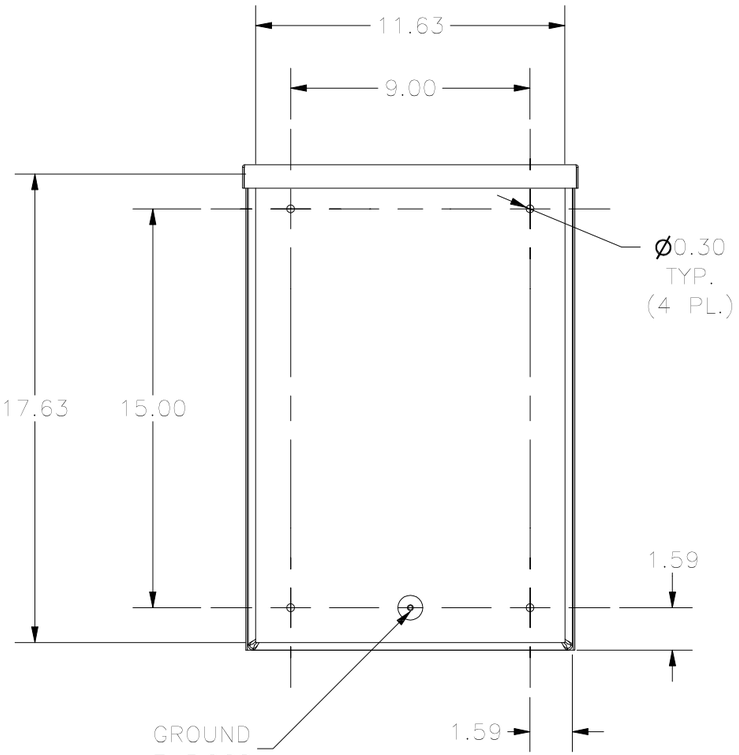

BACK VIEW

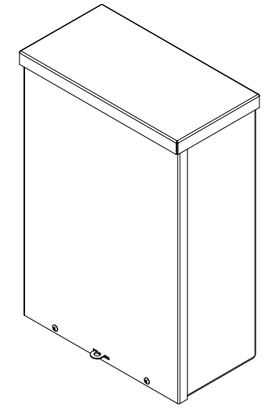

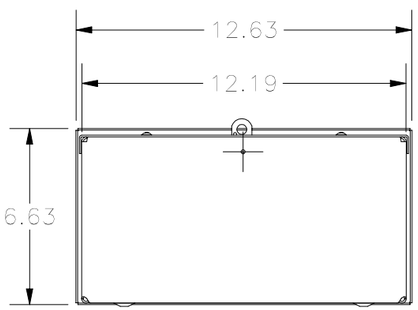

BOTTOM VIEW

PART#: RSC121806GNK
(DATA SUBJECT TO CHANGE WITHOUT NOTICE)

THIS DRAWING IS PROPERTY OF HUBBELL INC. WIEGMANN
ALL INFORMATION IS PROPRIETARY AND NOT TO BE DUPLICATED