

LEFT SIDE VIEW

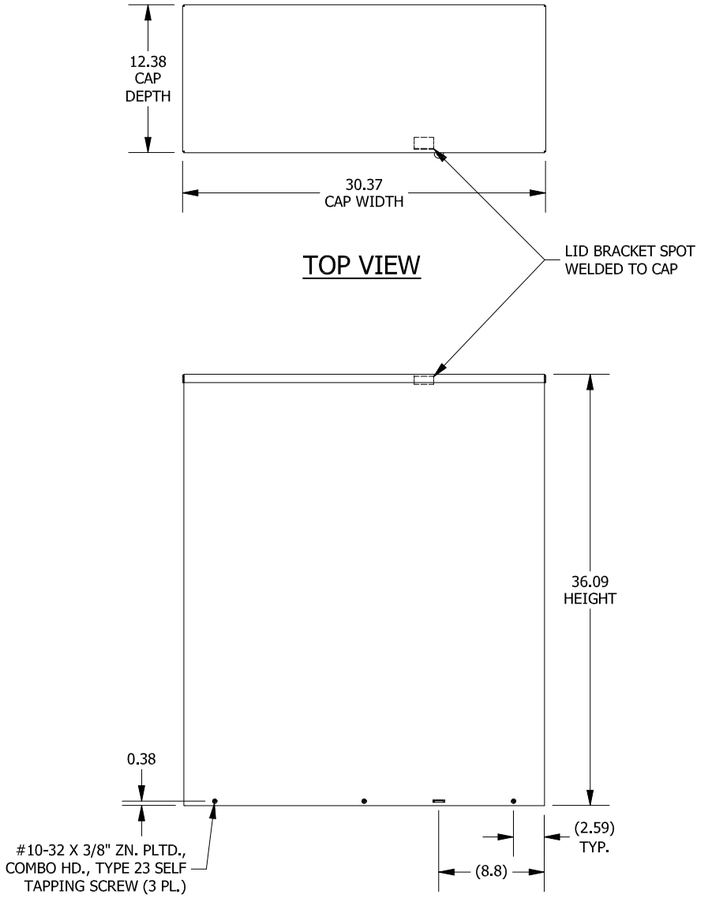

TOP VIEW

FRONT VIEW

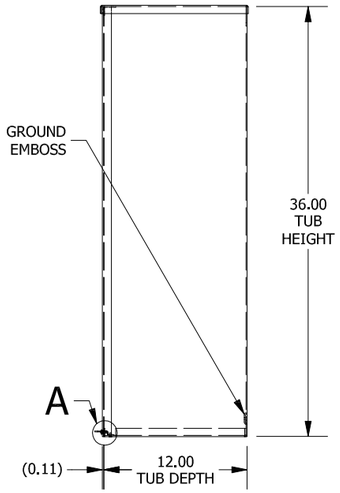

RIGHT SIDE VIEW

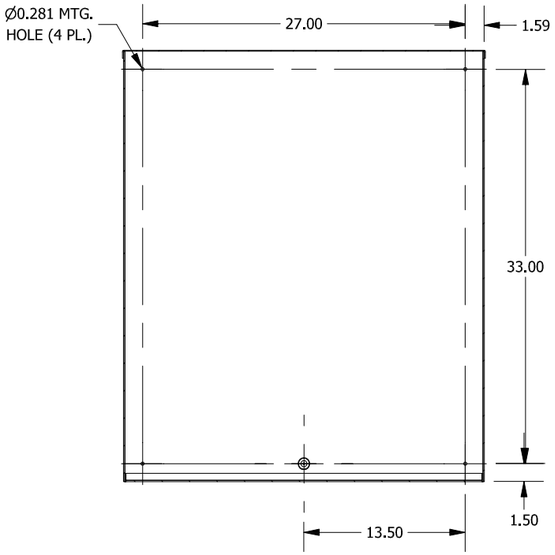

SECTION A-A
(INSIDE BACK OF ENCL.)

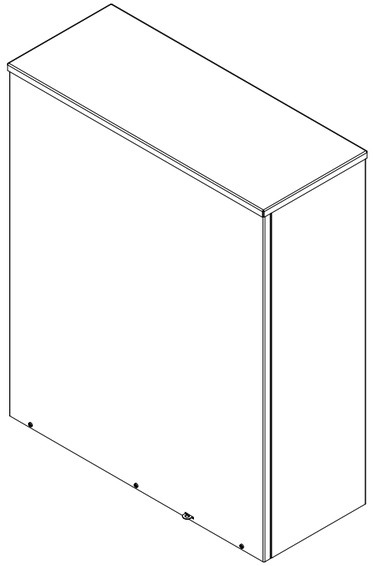

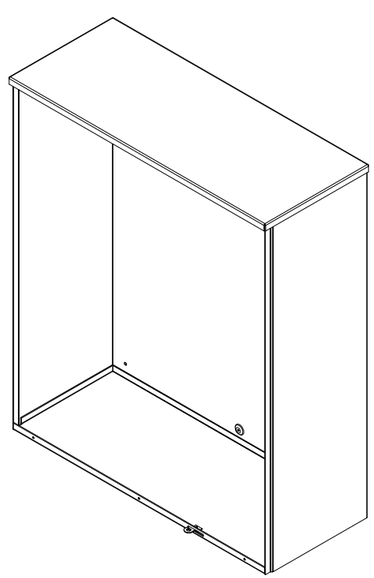

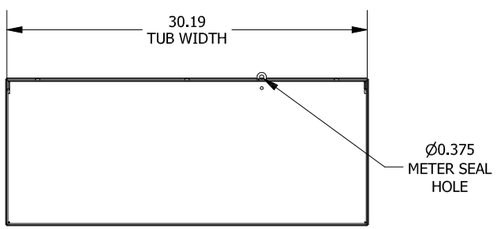

BOTTOM VIEW

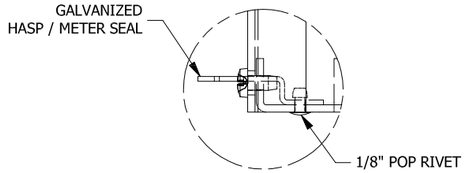

DETAIL A
(METER SEAL DETAIL)

PART#: RSC303612
(DATA SUBJECT TO CHANGE WITHOUT NOTICE)

THIS DRAWING IS PROPERTY OF HUBBELL INC. WIEGMANN
ALL INFORMATION IS PROPRIETARY AND NOT TO BE DUPLICATED