

DETAIL A (2 PL.)
(LID ATTACHMENT DETAIL)

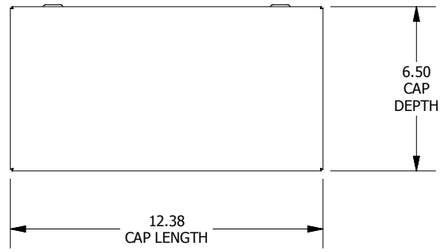

TOP VIEW

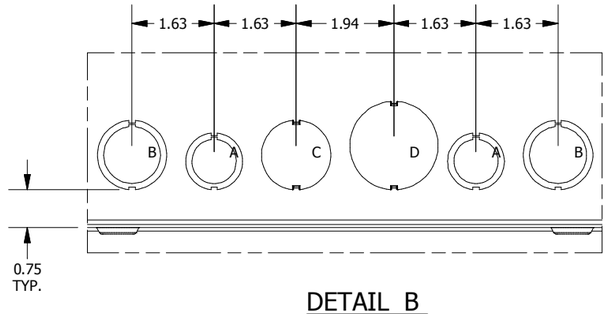

DETAIL B
(K.O. PATTERN)

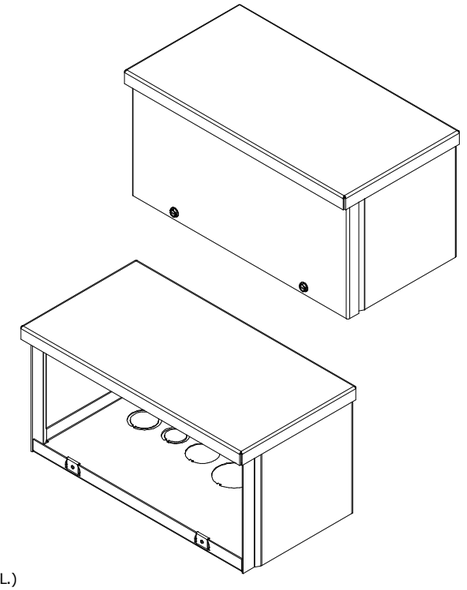

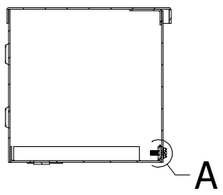

SECTION A-A
(INSIDE RIGHT OF ENCL.)

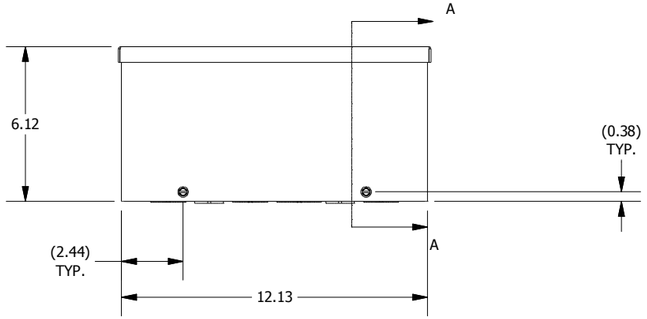

FRONT VIEW

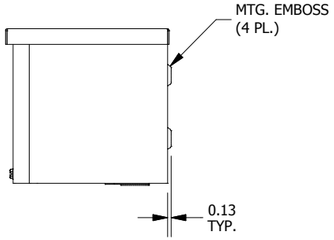

RIGHT SIDE VIEW

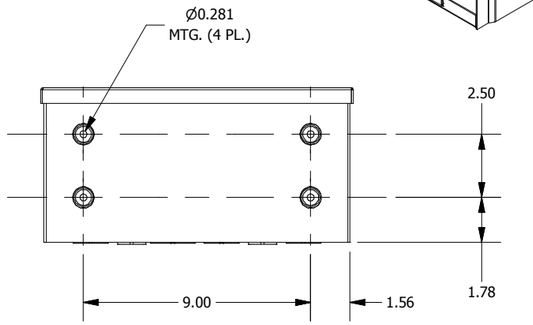

BACK VIEW

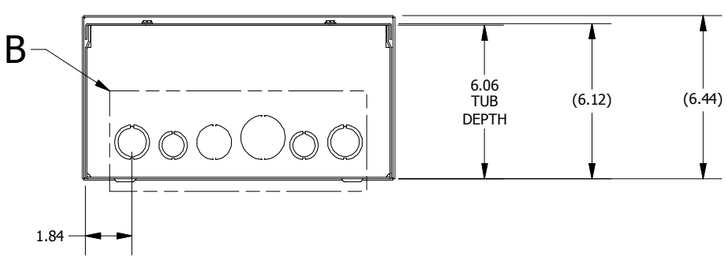

BOTTOM VIEW

KNOCKOUT SIZE TABLE	
SIZE	DESCRIPTION
A	1/2" TO 3/4" CONCENTRIC K.O.
B	3/4" TO 1" CONCENTRIC K.O.
C	1" SOLID K.O.
D	1-1/4" SOLID K.O.

PART#: RSCG060612
(DATA SUBJECT TO CHANGE WITHOUT NOTICE)

THIS DRAWING IS PROPERTY OF HUBBELL INC. WIEGMANN
ALL INFORMATION IS PROPRIETARY AND NOT TO BE DUPLICATED