Browning®

Shear Pin Hub Assembly Mounting and Operating Instructions

Emerson Industrial Automation
7120 New Buffington Road
Florence, KY 41042
Application Engineering: 800 626 2093
www.emerson-ept.com

FORM 4211 Revised June 2011

⚠ WARNING

- Read and follow all instructions carefully.
- Disconnect and lock-out power before installation and maintenance. Working on or near energized equipment can result in severe injury or death.
- Do not operate equipment without guards in place. Exposed equipment can result in severe injury or death.

⚠ CAUTION

- Periodic inspections should be performed. Failure to perform proper maintenance can result in premature product failure and personal injury.
- Lubricant on bushing barrel, hub or screws could lead to breakage.

A BROWNING® Shear Pin Hub Assembly consists of the following Parts:

1. One Shaft Flange
2. One Driver Flange
3. One Retaining Ring
4. One Spacer
5. Two Shear Pin Liners, Which Are Installed with Bore Chamfer Facing Outward
6. One Minimum Strength Shear Pin, Which is Necked
7. Three Driver Cap Screws for SHH1 and SHP1 Hubs and Four Driver Cap Screws for SHQ1, SHR1,SHR2, SHS2 and SHU2 Hubs

It is used with BROWNING SPLIT TAPER® Bushings and a driving unit such as a Sprocket. It is furnished assembled with the minimum strength shear pin in place. If more torque is required than this pin will transmit, replace it with a Browning® Stock Shear Pin having a larger neck diameter. Refer to Emerson Indistrial Automation® Components Catalog for shear pin information. Browning Stock Shear Pins are precision machined from a specific steel to provide breakage at the calculated torque.

WARNING! Use only BROWNING shear pin and liner. Failure to do so can result in damage to personnel, equipment and this protection device.

Fig. 1
SHH1, SHP1, SHQ1 & SHR1

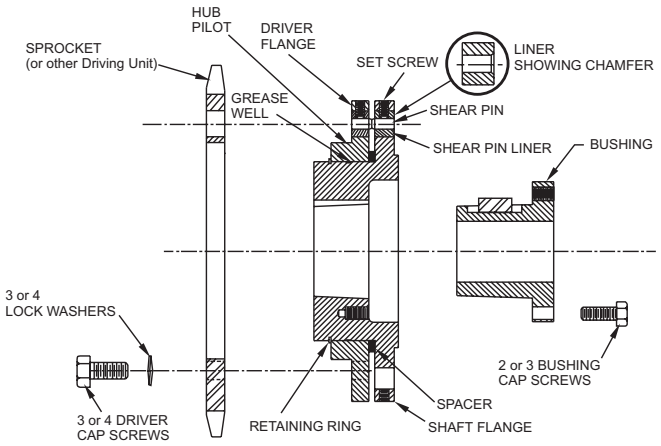

Fig. 2
SHR2, SHS2 & SHU2

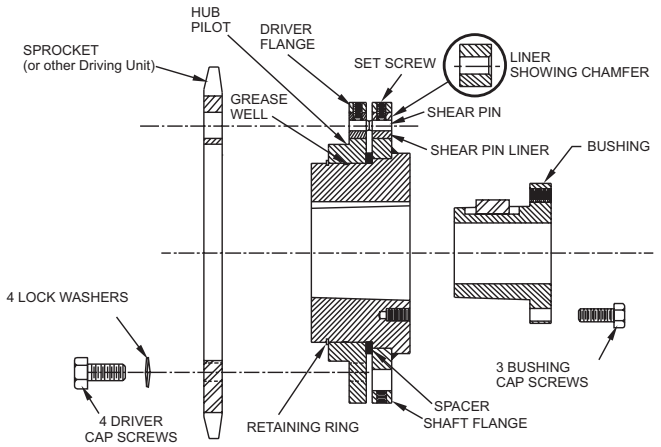

EMERSON
Industrial Automation

Browning, Browning Split Taper, Emerson and Emerson Industrial Automation are trademarks of Emerson Electric Co. or one of its affiliated companies.
©2011 Emerson Power Transmission Corps., All Rights Reserved.
MCIM10020 • Form# 4211 • Printed in USA

BEFORE INSTALLATION:
Make sure the shaft, shear pin hub bore, keys and keyways are free of burrs, paint, etc.

MOUNTING THE SPROCKET (OR OTHER DRIVING UNIT) (SEE FIG. 1 & 2)

1. Slide the sprocket (or other driving unit) over the hub pilot of the Driver Flange. Align the (3) or (4) mounting holes of the sprocket (or other driving unit) with the (3) or (4) threaded mounting holes in the Driver Flange.
2. Use the Driver Cap Screws provided (see Table 1) to mount the sprocket (or other driving unit) to the Driver Flange.
3. Tighten the (3) or (4) Driver Cap Screws in an alternate progressive manner to the proper torque shown in Table 1. The torque values shown in Table 1 are for SAE Grade 5 cap screws only.

MOUNTING THE SHEAR PIN ASSEMBLY WITH ATTACHED SPROCKET (OR OTHER DRIVING UNIT)

4. Slide or position the shear pin hub assembly with attached sprocket (or other driving unit) over the shaft. Next, slide the split taper bushing on the shaft and into the bore of the shear pin assembly (hereafter referred to as the assembly). At this time, the bushing cap screws should be threaded into the shaft flange mounting holes hand tight.
5. Align the assembly and bushing parallel with its running mate. It is important that the shafts be aligned accurately. The driving and driven shafts must be parallel with a maximum error of ¼ degree (0.052 inch per foot)
6. The assembly with attached sprocket (or other driving unit) and its running mate must be aligned axially on their respective shafts as closely as practical. See Fig. 3 below. Using a straightedge or length of piano wire, align the faces of the sprockets within the values shown in Table 3. If driving units other than sprockets are used, contact Technical Services for axial alignment recommendations. The assembly with attached sprocket (or other driving unit) may have to be repositioned on its shaft to compensate for its slight axial motion due to tightening the bushing in step 7.
7. For mounting and securing the assembly and the split taper bushing to the shaft, follow the instructions on the split taper bushing box, or refer to Browning Form No. 4013 (split taper bushing instructions).
8. Check the shaft flange and driver flange to make sure they are in contact with their respective face of the spacer. There should be approximately 1/8" gap between these two flanges and there should be no play (or movement) between them.

   CAUTION: Play between the two flanges increases the torque required to break the shear pins. This play can cause damage to the assembly! AVOID.

INSTALLING THE SHEAR PIN

9. Since the assembly is shipped with a minimum strength shear pin, check to make sure this pin is correct for the application. A selection procedure is outlined in the Emerson Industrial Automation® Components Catalog. Higher strength Browning shear pins are available.
10. If a higher strength shear pin is required, remove the minimum strength pin shipped with the assembly and replace it with the higher strength pin. In order to do this, release the torque on the setscrews helping secure the shear pin liners by backing them out a few turns with a hex key or torque wrench with hex key.
11. After the higher strength shear pin has been installed, torque the setscrews used to help secure the shear pin liners. Using a torque wrench with hex key, tighten the setscrews to the specified torque in Table 4.

    CAUTION: Tighten the cap screws and setscrews to the torque values shown in Tables 1, 2 or 4 or this may lead to an unsafe assembly.

Figure 3

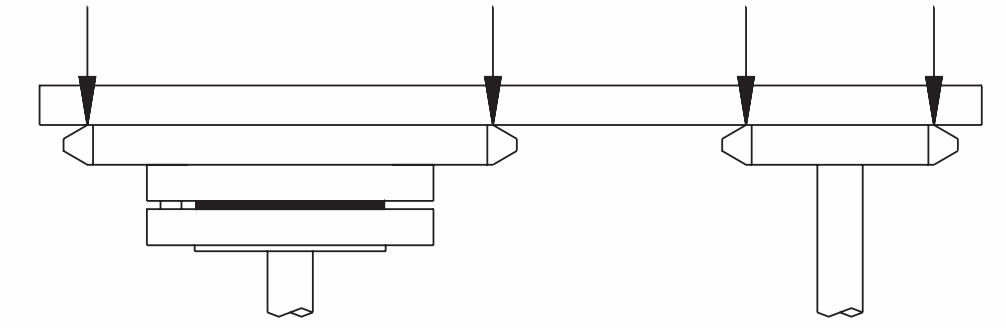

OPERATING THE ASSEMBLY

12. The assembly is grease packed and there is a grease well on all assemblies. Provision for re-greasing capability is included on the larger sizes (SHR2, SHS2 & SHU2). The purpose of the grease well and packing is to prevent damage to the flanges after pin breakage and assure low friction rotation of the driving flange, allowing the assembly to rotate.
13. When a load sufficient to break the shear pin occurs, the drive should be stopped and the pin replaced as soon as possible.

    WARNING! Prolonged operation with a sheared (broken) shear pin can damage the assembly and lead to personal injury or death.
14. After each pin breakage, the shear pin liners must be inspected for damage. In case of damage, new liners are available and must be replaced by driving out the damaged ones and replacing them with new ones.

    WARNING! Use only BROWNING® shear pin and liner. Failure to do so can result in damage to personnel, equipment and this protection device.
15. Install the new shear pin liners in the extra hole provided in both the driver flange and the shaft flange with the chamfered end of the liner facing outward as shown in Fig's. 1 & 2.

    CAUTION: Install new shear pin liners with their bore chamfer facing outward as shown in Fig's. 1 & 2 or assembly performance may be affected.

CAP SCREW SIZE AND TIGHTENING TORQUE

Table 1

ASS'Y PART NUMBER	SAE GRADE 5 DRIVER CAP SCREWS		TIGHTENING TORQUE	
	NO.	SIZE	(IN-LBS)	(FT-LBS)
SHH1	3	3/8 - 16NC	348	29
SHP1	3	1/2 - 13NC	840	70
SHQ1	4	1/2 - 13NC	840	70
SHR1	4	5/8 - 11NC	1680	140
SHR2	4	5/8 - 11NC	1680	140
SHS2	4	3/4 - 1ONC	3000	250
SHU2	4	7/8 - 9NC	4800	400

Table 2

ASS'Y PART NUMBER	SPLIT TAPER BUSHING SIZE	SAE GRADE 5 BUSHING CAP SCREWS		TIGHTENING TORQUE	
		NO.	SIZE	(IN-LBS)	(FT-LBS)
SHH1	H	2	1/4 - 2ONC	95	8
SHP1	P1	3	5/16 - 18NC	192	16
SHQ1	Q1	3	3/8 - 16NC	348	29
SHR1	R1	3	3/8 - 16NC	348	29
SHR2	R2	3	3/8 - 16NC	348	29
SHS2	S2	3	1/2 - 13NC	840	70
SHU2	U2	3	5/8 - 11NC	1680	140

SPROCKET FACE AXIAL MISALIGNMENT (MAXIMUM OFFSET)

Table 3

ASST. PART NO	SPROCKET CHAIN SIZE										
	35	41	40	50	60	80	100	120	140	160	200
SHH1	.017"	.023"	.023"	.028"	.034"	*	*	*	*	*	*
SHP1	.017	.023	.023	.028	.034	.045"	*	*	*	*	*
SHQ1	—	.023	.023	.028	.034	.045	.056"	*	*	*	*
SHR1	—	—	.023	.028	.034	.045	.056	*	*	*	*
SHR2	—	—	—	.028	.034	.045	.056	.068"	.079"	*	*
SHS2	—	—	—	—	.034	.045	.056	.068	.079	.090"	*
SHU2	—	—	—	—	—	.045	.056	.068	.079	.090	.113"

* These assemblies should not be used with these chain sizes.

SETSCREW SIZE AND TIGHTENING TORQUE

Table 4

ASS'Y PART NUMBER	SETSCREW SIZE	TIGHTENING TORQUE
		(IN-LBS)
SHH1	#10 -24NC	33
SHP1	1/4 - 2ONC	87
SHQ1	1/4 - 2ONC	87
SHR1	1/4 - 2ONC	87
SHR2	5/16 - 18NC	165
SHS2	3/8 - 16NC	290
SHU2	3/8 - 16NC	290

Have questions? Call Technical Services at 1-800-626-2093.

Browning, Browning Split Taper, Emerson and Emerson Industrial Automation
are trademarks of Emerson Electric Co. or one of its affiliated companies.
©2011 Emerson Power Transmission Corps., All Rights Reserved.
MCIM10020 • Form# 4211 • Printed in USA

EMERSON
Industrial Automation