


TOP VIEW

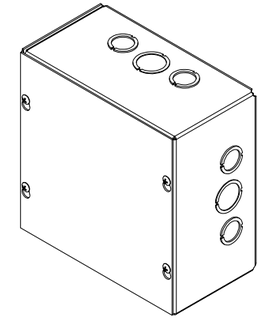

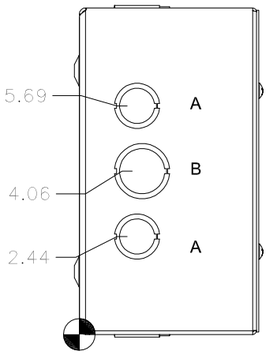


LEFT SIDE VIEW

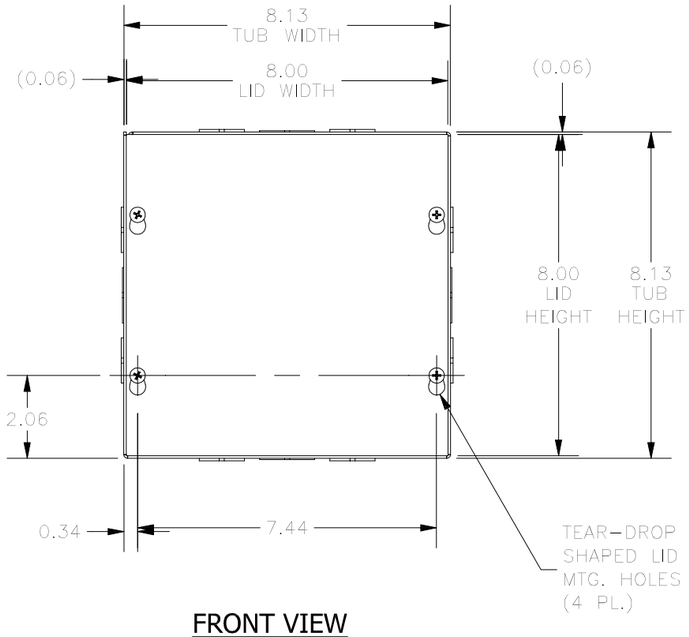


FRONT VIEW

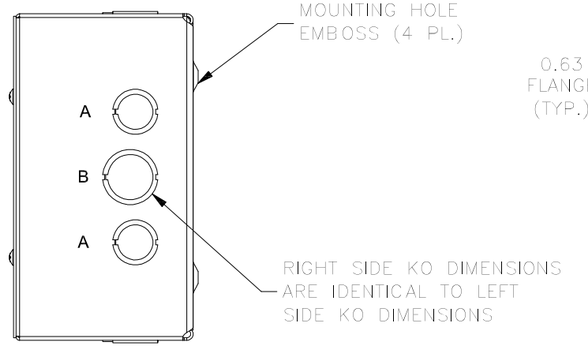


RIGHT SIDE VIEW

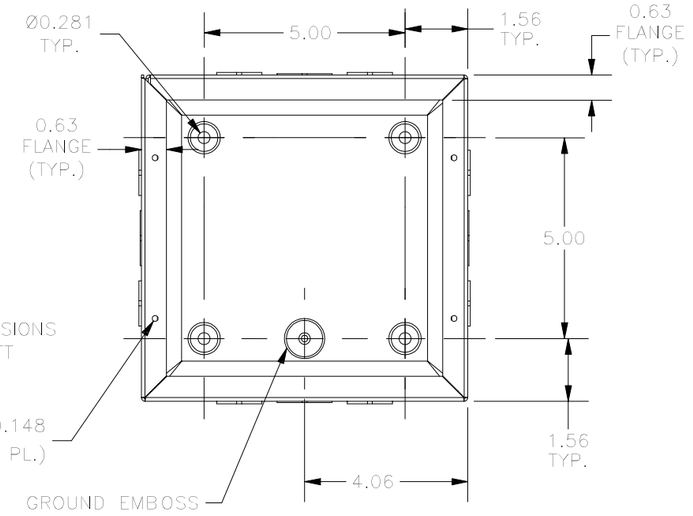


FRONT VIEW LID REMOVED

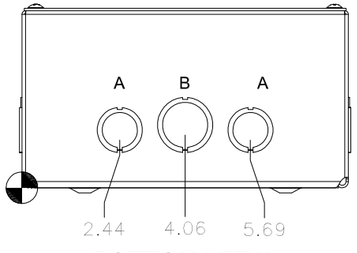


BOTTOM VIEW

| KNOCKOUT TABLE | |
|---|---|
| SIZE | DESCRIPTION |
| A | 1/2" TO 3/4" |
| B | 3/4 TO 1" |

# PART#: SC080804G
# (DATA SUBJECT TO CHANGE WITHOUT NOTICE)

THIS DRAWING IS PROPERTY OF HUBBELL INC. WIEGMANN
ALL INFORMATION IS PROPRIETARY AND NOT TO BE DUPLICATED