

TOP VIEW

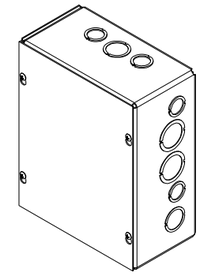

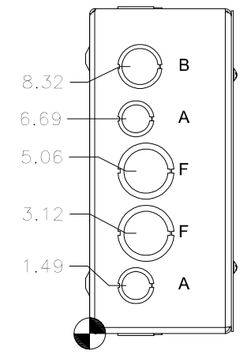

LEFT SIDE VIEW

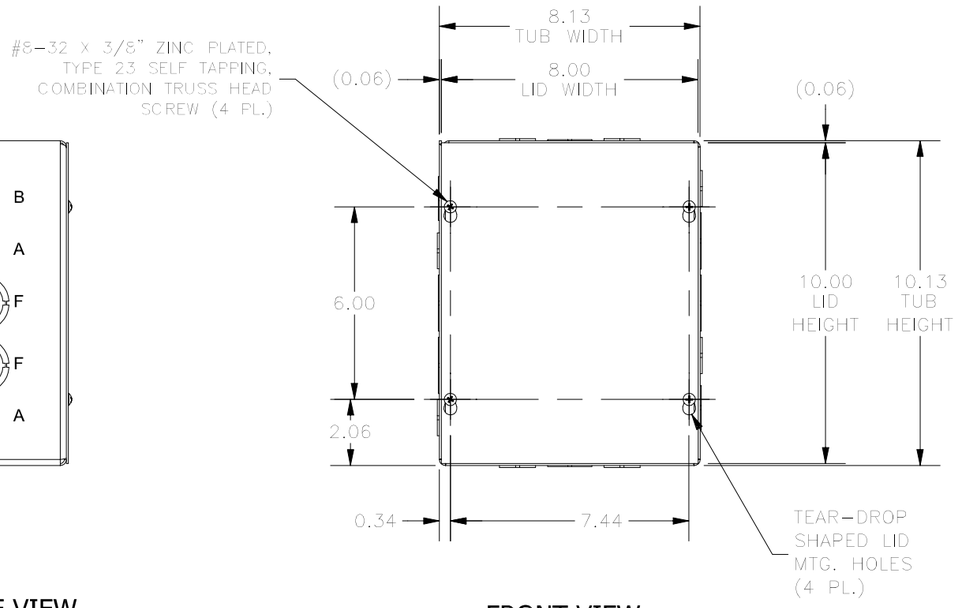

FRONT VIEW

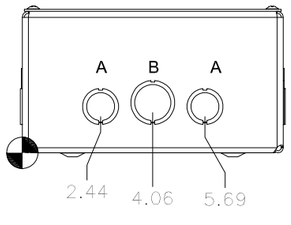

BOTTOM VIEW

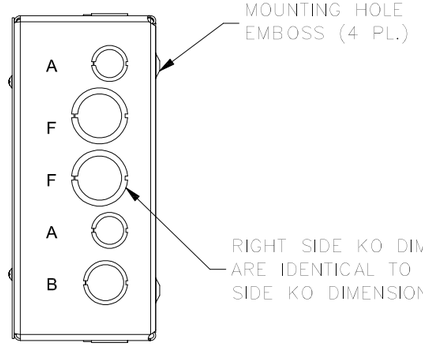

RIGHT SIDE VIEW

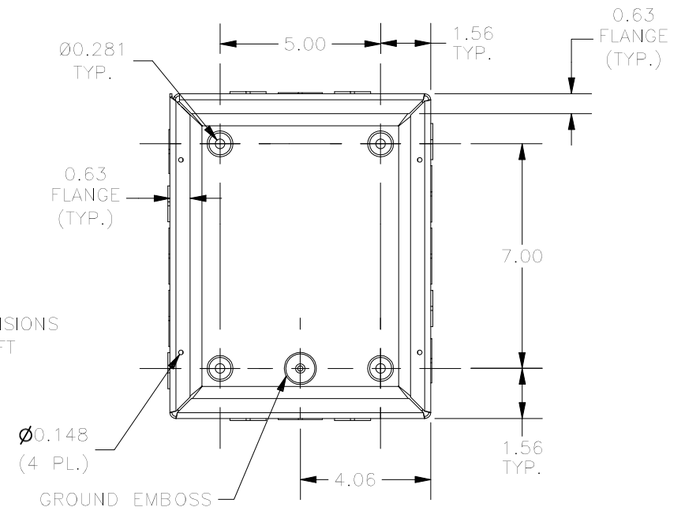

FRONT VIEW LID REMOVED

PART#: SC081004
(DATA SUBJECT TO CHANGE WITHOUT NOTICE)

THIS DRAWING IS PROPERTY OF HUBBELL INC. WIEGMANN
ALL INFORMATION IS PROPRIETARY AND NOT TO BE DUPLICATED