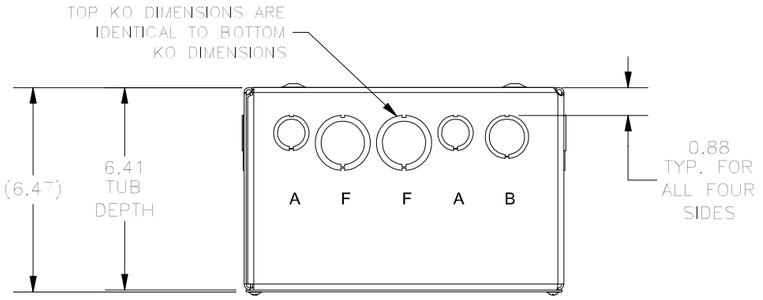


TOP VIEW

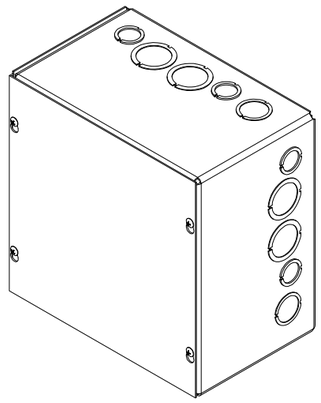

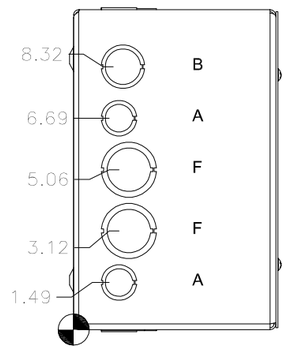


LEFT SIDE VIEW

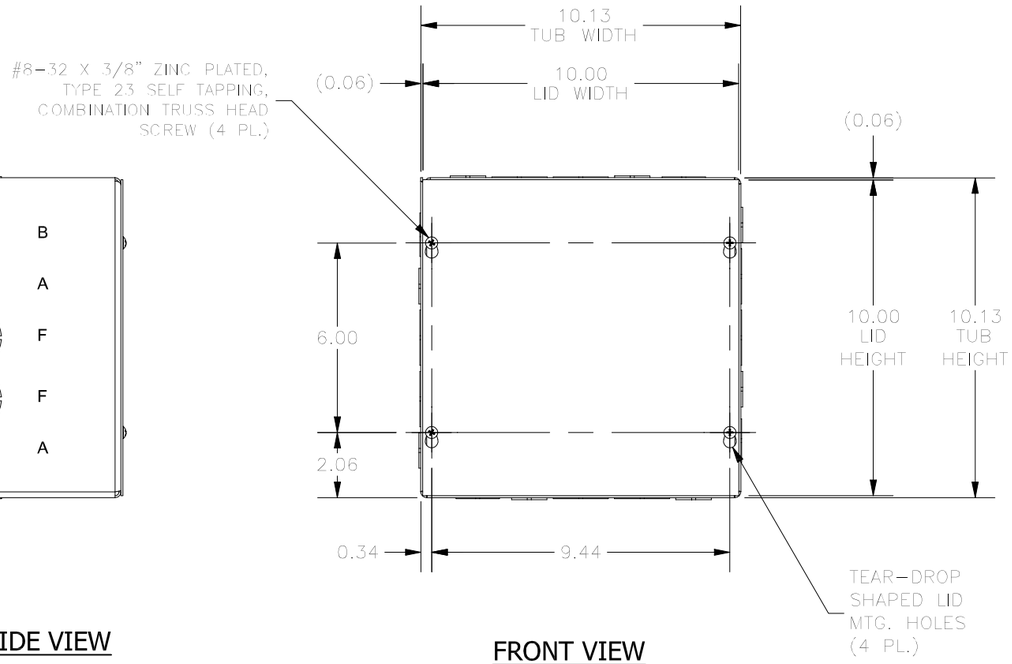


FRONT VIEW

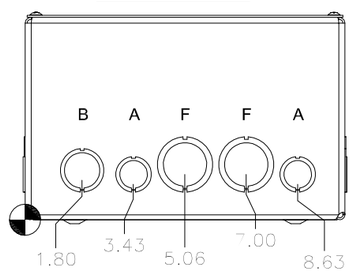


BOTTOM VIEW

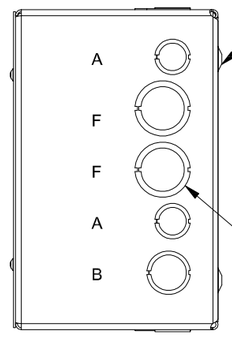


RIGHT SIDE VIEW

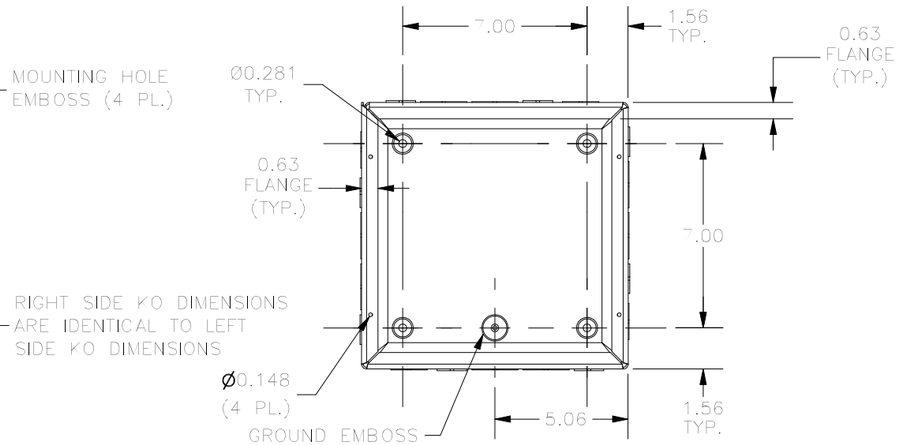


FRONT VIEW LID REMOVED

PART#: SC101006
(DATA SUBJECT TO CHANGE WITHOUT NOTICE)

THIS DRAWING IS PROPERTY OF HUBBELL INC. WIEGMANN
ALL INFORMATION IS PROPRIETARY AND NOT TO BE DUPLICATED