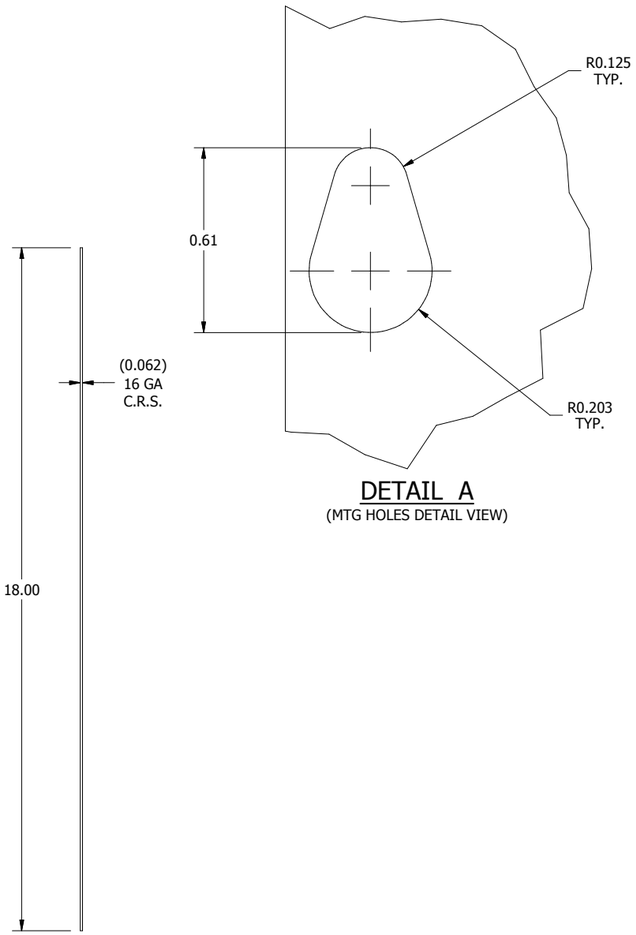

DETAIL A
(MTG HOLES DETAIL VIEW)

SIDE VIEW

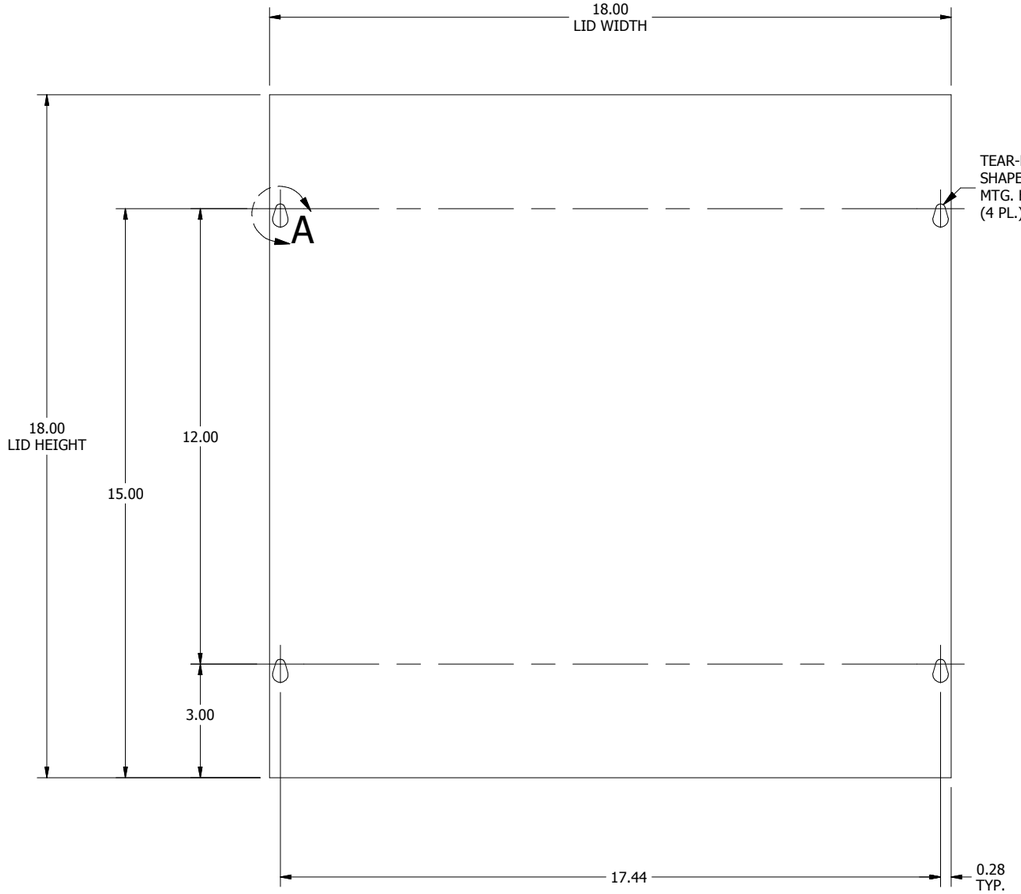

FRONT VIEW

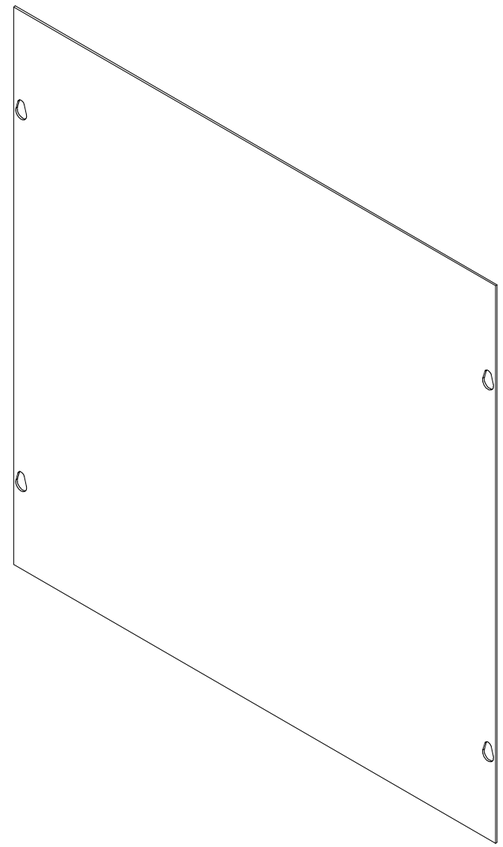

PART#: SC1818
(DATA SUBJECT TO CHANGE WITHOUT NOTICE)

THIS DRAWING IS PROPERTY OF HUBBELL INC. WIEGMANN
ALL INFORMATION IS PROPRIETARY AND NOT TO BE DUPLICATED