


TOP VIEW

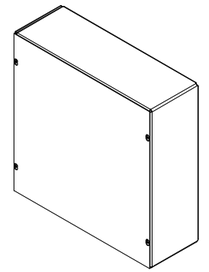



LEFT SIDE VIEW

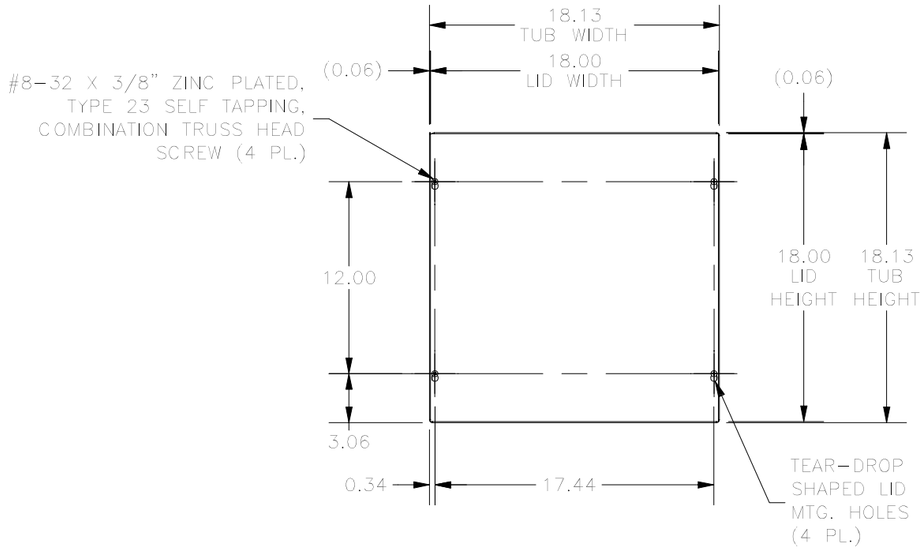


FRONT VIEW

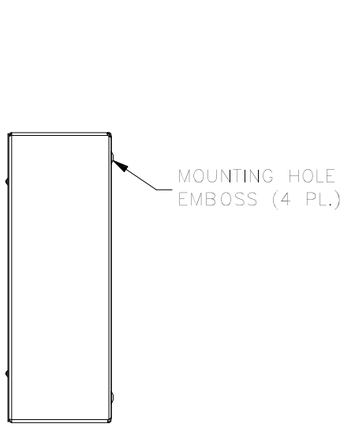


RIGHT SIDE VIEW

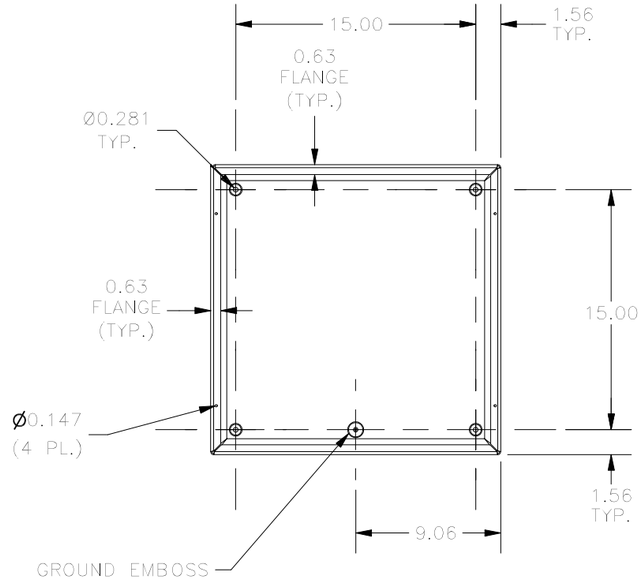


FRONT VIEW LID REMOVED



BOTTOM VIEW

PART#: SC181806NK
(DATA SUBJECT TO CHANGE WITHOUT NOTICE)

THIS DRAWING IS PROPERTY OF HUBBELL INC. WIEGMANN
ALL INFORMATION IS PROPRIETARY AND NOT TO BE DUPLICATED