

TOP VIEW

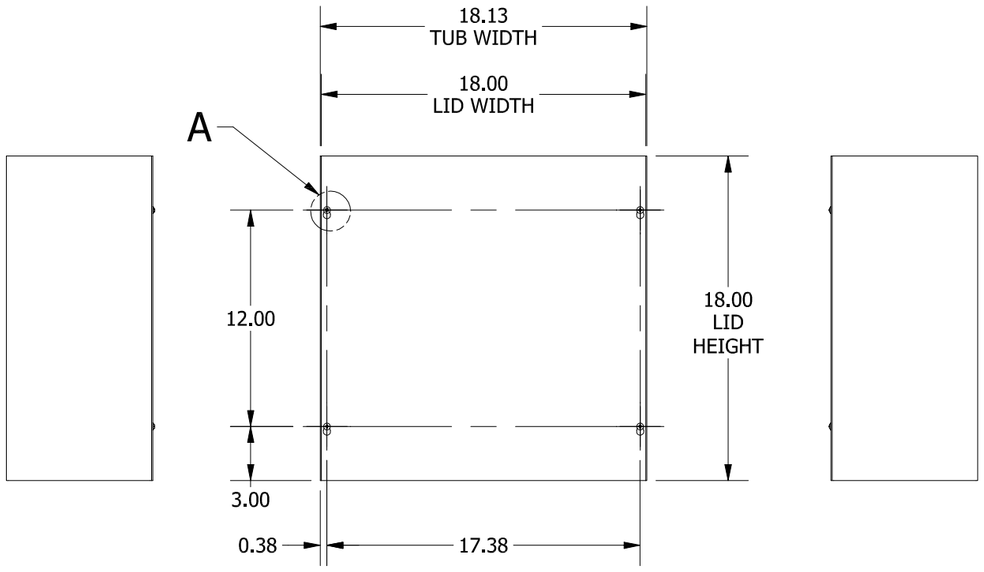

LEFT SIDE VIEW

FRONT VIEW

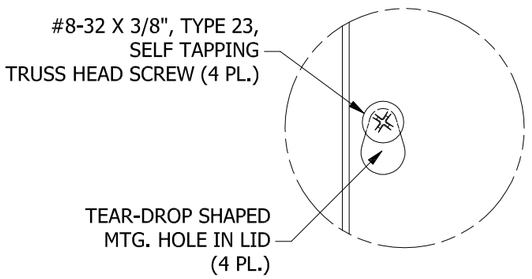

DETAIL A

RIGHT SIDE VIEW

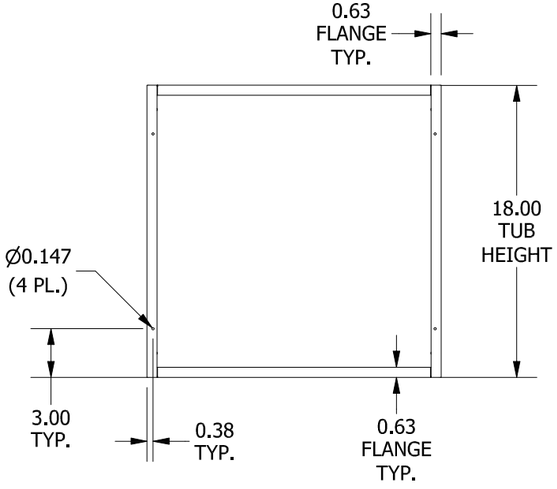

FRONT VIEW LID REMOVED

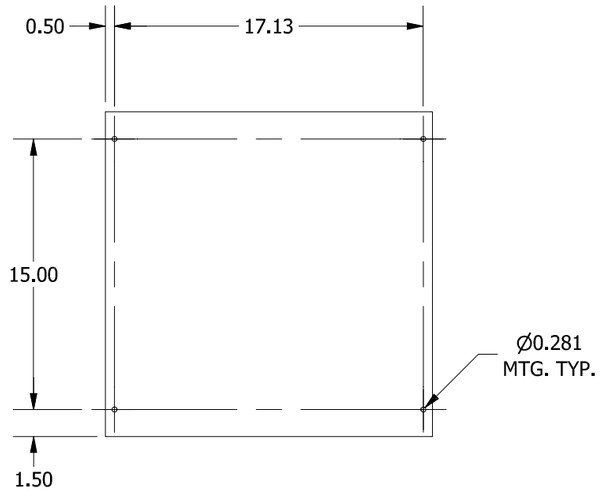

BACK VIEW

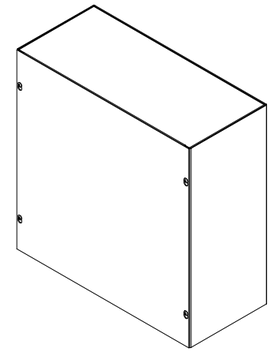



BOTTOM VIEW

PART#: SC181808NK
(DATA SUBJECT TO CHANGE WITHOUT NOTICE)

THIS DRAWING IS PROPERTY OF HUBBELL INC. WIEGMANN
ALL INFORMATION IS PROPRIETARY AND NOT TO BE DUPLICATED