

TOP VIEW

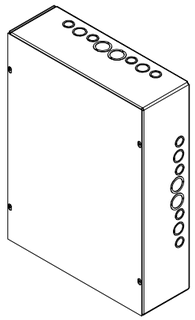

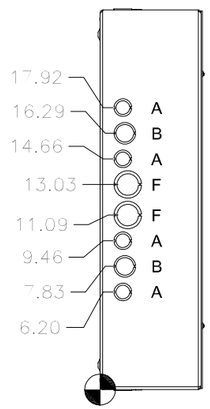

LEFT SIDE VIEW

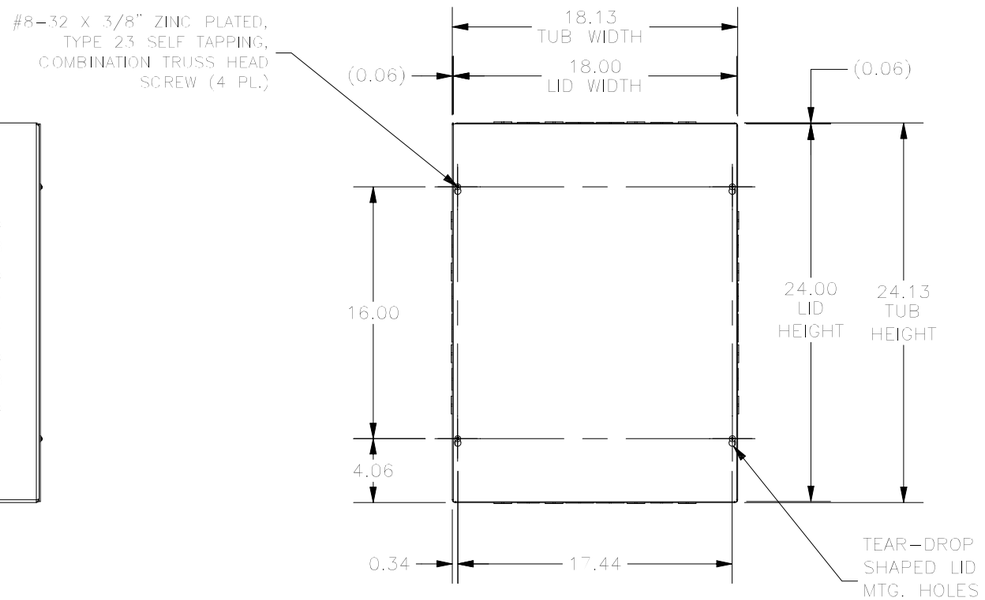

FRONT VIEW

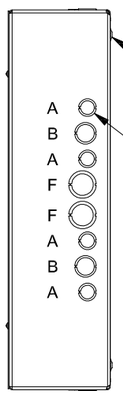

MOUNTING HOLE
EMBOSS (4 PL.)

RIGHT SIDE KO DIMENSIONS
ARE IDENTICAL TO LEFT
SIDE KO DIMENSIONS

RIGHT SIDE VIEW

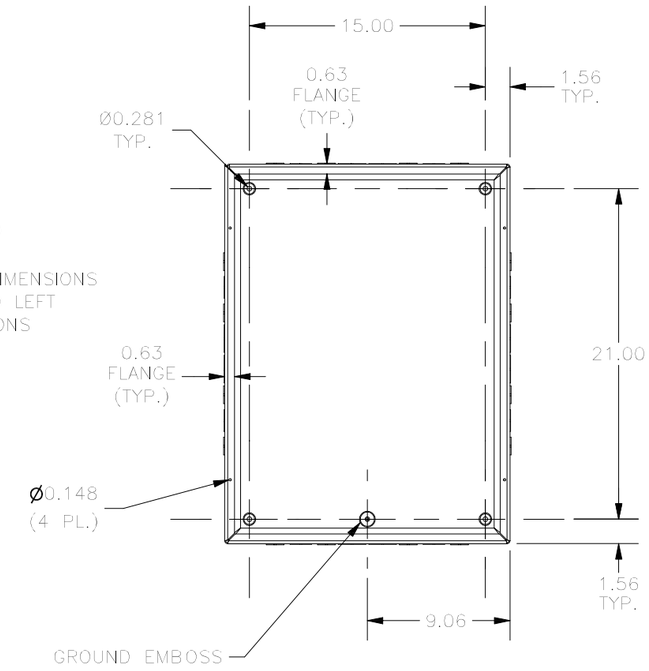

FRONT VIEW LID REMOVED

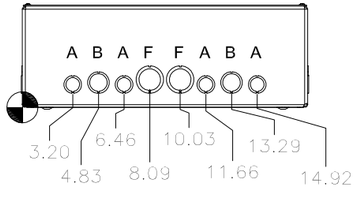

BOTTOM VIEW

PART#: SC182406
(DATA SUBJECT TO CHANGE WITHOUT NOTICE)

THIS DRAWING IS PROPERTY OF HUBBELL INC. WIEGMANN
ALL INFORMATION IS PROPRIETARY AND NOT TO BE DUPLICATED