

TOP VIEW

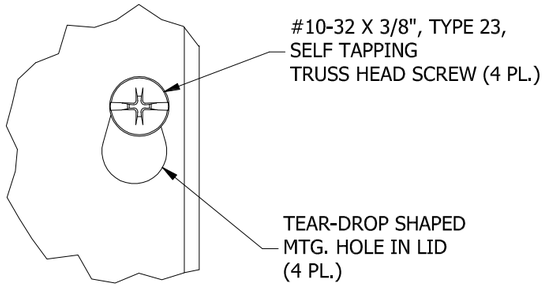

DETAIL C

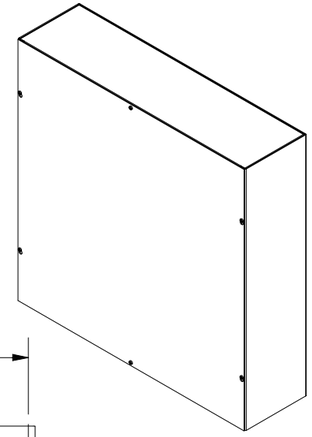

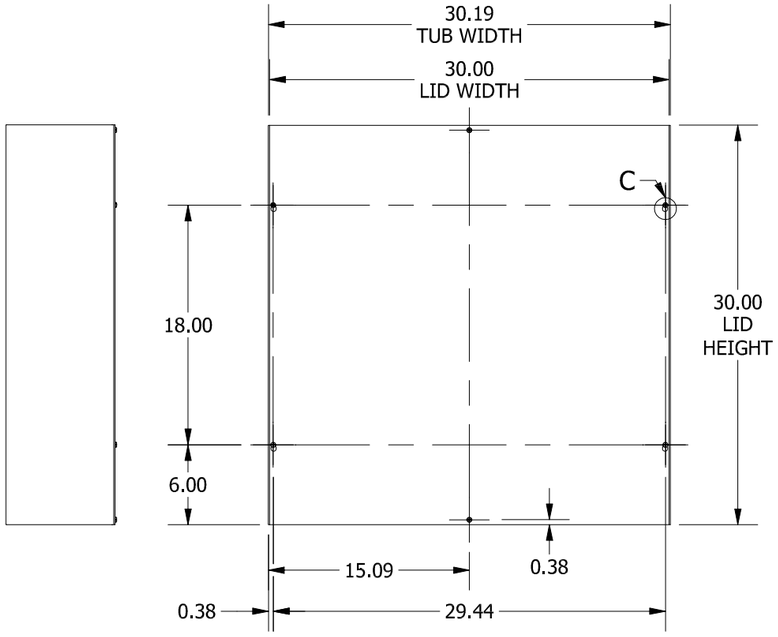

FRONT VIEW

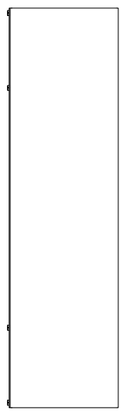

LEFT SIDE VIEW

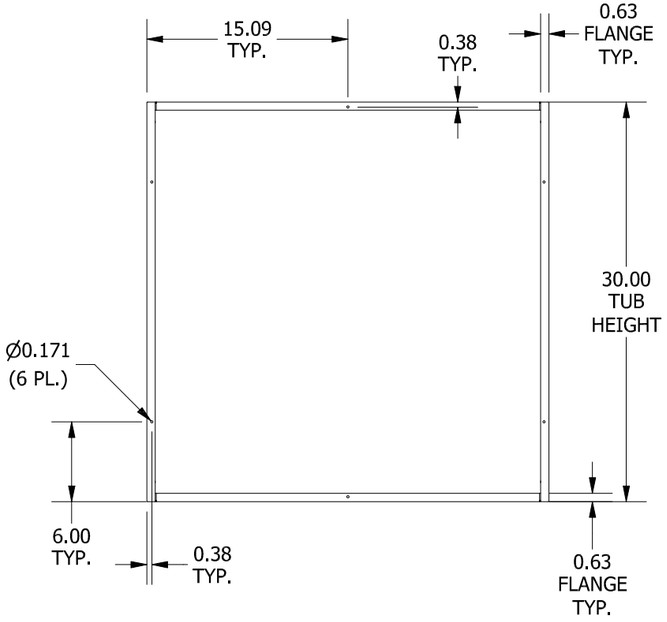

RIGHT SIDE VIEW

FRONT VIEW LID REMOVED

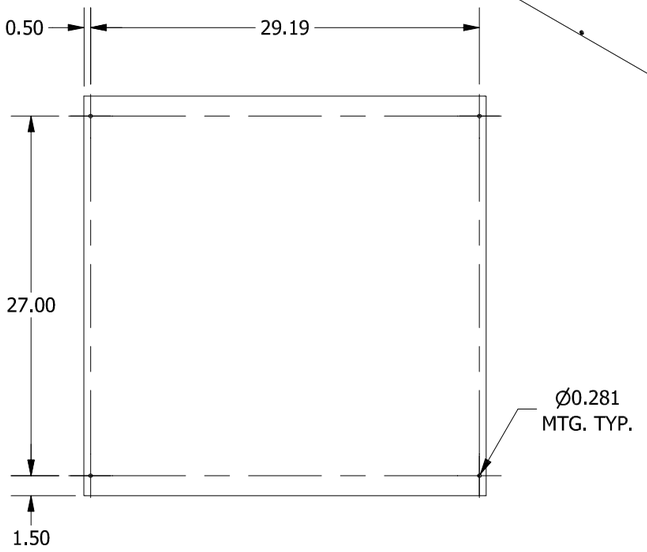

BACK VIEW



BOTTOM VIEW

PART#: SC303008GNK
(DATA SUBJECT TO CHANGE WITHOUT NOTICE)

THIS DRAWING IS PROPERTY OF HUBBELL INC. WIEGMANN
ALL INFORMATION IS PROPRIETARY AND NOT TO BE DUPLICATED