Screw Conveyor Trough Ends Sizes 107-407



Formed Hot Roll Plate Steel

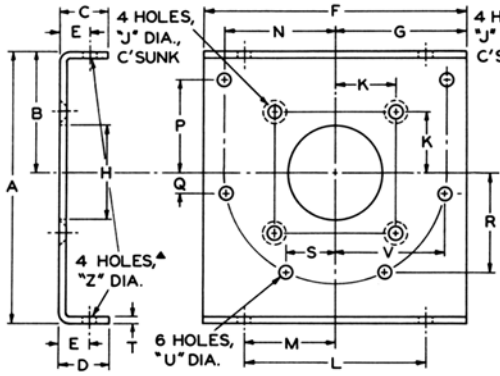

FIG 1 - 6 HOLE TYPE

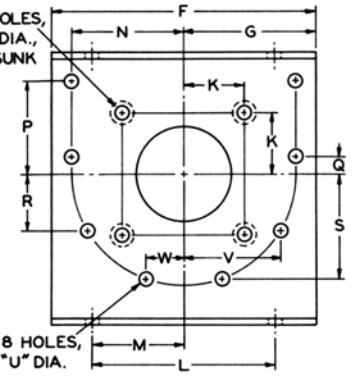

FIG 2 - 8 HOLE TYPE

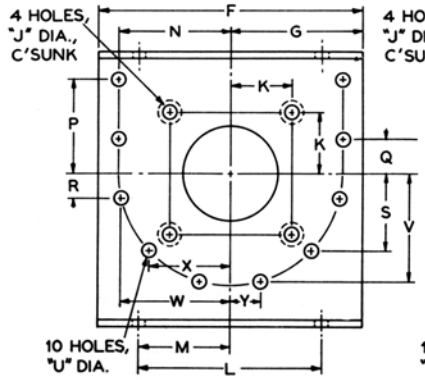

FIG 3 -10 HOLE TYPE

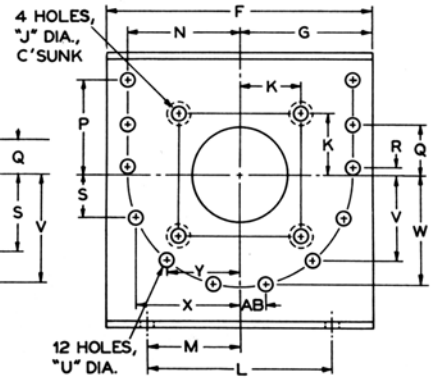

FIG 4 - 12 HOLE TYPE

Specifications

Part No.	Conveyor Screw Dia.	Drive Shaft Dia.	Fig.	Type	Dimensions										
					A	B	C	D	E	F	G	H	J	K	L
SCTE06 x 1 1/2"	6"	1 1/2"	1	6-Hole	10 1/8"	4 1/2"	1 1/2"	1 3/4"	1"	9 3/4"	4 7/8"	1 3/4"	9/16"	2"	8 1/8"
SCTE09 x 1 1/2	9	1 1/2	2	8-Hole	14	6 1/8	1 5/8	2 5/8	1 1/2	13 3/4	6 7/8	1 3/4	9/16	2	9 3/8
SCTE09 x 2	9	2	2	8-Hole	14	6 1/8	1 5/8	2 5/8	1 1/2	13 3/4	6 7/8	2 1/4	11/16	2 9/16	9 3/8
SCTE10 x 1 1/2	10	1 1/2	2	8-Hole	15 1/4	6 3/8	2 3/8	2 7/8	1 3/4	14 3/4	7 3/8	1 3/4	9/16	2	9 1/2
SCTE10 x 2	10	2	2	8-Hole	15 1/4	6 3/8	2 7/8	2 7/8	1 3/4	14 3/4	7 3/8	2 1/4	11/16	2 9/16	9 1/2
SCTE12 x 2	12	2	2	8-Hole	17 3/8	7 3/4	2	2 3/4	1 5/8	17 1/4	8 5/8	2 1/4	11/16	2 9/16	12 1/4
SCTE12 x 2 7/16	12	2 7/16	2	8-Hole	17 3/8	7 3/4	2	2 3/4	1 5/8	17 1/4	8 5/8	2 11/16	11/16	2 13/16	12 1/4
SCTE12 x 3	12	3	2	8-Hole	17 3/8	7 3/4	2	2 3/4	1 5/8	17 1/4	8 5/8	3 1/4	13/16	3	12 1/4
SCTE14 x 2 7/16	14	2 7/16	2	8-Hole	20 1/8	9 1/4	2	2 7/8	1 5/8	19 1/4	9 5/8	2 11/16	11/16	2 13/16	13 1/2
SCTE14 x 3	14	3	2	8-Hole	20 1/8	9 1/4	2	2 7/8	1 5/8	19 1/4	9 5/8	3 1/4	13/16	3	13 1/2
SCTE16 x 3	16	3	2	8-Hole	22 5/8	10 5/8	2 1/2	3 1/4	2	21 1/4	10 5/8	3 1/4	13/16	3	14 7/8
SCTE18 x 3	18	3	3	10-Hole	25 1/2	12 1/8	2 1/2	3 1/4	2	24 1/4	12 1/8	3 1/4	13/16	3	16
SCTE18 x 3 7/16	18	3 7/16	3	10-Hole	25 1/2	12 1/8	2 1/2	3 1/4	2	24 1/4	12 1/8	3 11/16	13/16	3 3/8	16
SCTE20 x 3	20	3	3	10-Hole	28 1/2	13 1/2	2 1/2	3 3/4	2 1/4	26 1/4	13 1/8	3 1/4	13/16	3	19 1/4
SCTE20 x 3 7/16	20	3 7/16	3	10-Hole	28 1/2	13 1/2	2 1/2	3 3/4	2 1/4	26 1/4	13 1/8	3 11/16	13/16	3 3/8	19 1/4
SCTE24 x 3 7/16	24	3 7/16	4	12-Hole	34 5/8	16 1/2	2 1/2	4 1/8	2 1/2	30 1/4	15 1/8	3 11/16	13/16	3 3/8	20

Part No.	Dimensions														Wt. Lbs.
	M	N	P	Q	R	S	T	U	V	W	X	Y	Z	AB	
SCTE06 x 1 1/2"	4 1/16"	4 7/16"	3 15/32"	5/8"	3 15/16"	2 1/32"	3/16"	7/16"	4 25/64"	-	-	-	7/16"	-	6.7
SCTE09 x 1 1/2	4 11/16	6 1/4	4 15/16	13/16	3 13/64	5 45/64	1/4	7/16	5 23/64	2 9/16"	-	-	9/16	-	17.8
SCTE09 x 2	4 11/16	6 1/4	4 15/16	13/16	3 13/64	5 45/64	1/4	7/16	5 23/64	2 9/16	-	-	9/16	-	17.7
SCTE10 x 1 1/2	4 3/4	6 5/8	4 1/8	5/8	3 3/8	6 1/8	1/4	7/16	5 45/64	2 17/32	-	-	9/16	-	20.6
SCTE10 x 2	4 3/4	6 5/8	4 1/8	5/8	3 3/8	6 1/8	1/4	7/16	5 45/64	2 17/32	-	-	9/16	-	20.5
SCTE12 x 2	6 1/8	7 15/16	6 1/4	15/16	4 7/64	6 59/64	5/16	9/16	6 51/64	3 7/8	-	-	11/16	-	33.8
SCTE12 x 2 7/16	6 1/8	7 15/16	6 1/4	15/16	4 7/64	6 59/64	5/16	9/16	6 51/64	3 7/8	-	-	11/16	-	33.5
SCTE12 x 3	6 1/8	7 15/16	6 1/4	15/16	4 7/64	6 59/64	5/16	9/16	6 51/64	3 7/8	-	-	11/16	-	33.3
SCTE14 x 2 7/16	6 3/4	8 15/16	6 23/32	1 3/32	4 11/16	8 27/64	5/16	9/16	7 39/64	3	-	-	11/16	-	42.4
SCTE14 x 3	6 3/4	8 15/16	6 23/32	1 3/32	4 11/16	8 27/64	5/16	9/16	7 39/64	3	-	-	11/16	-	42.2
SCTE16 x 3	7 7/16	10	8	1 5/8	4 57/64	9 17/64	5/16	11/16	8 23/32	3 3/4	-	-	11/16	-	51.1
SCTE18 x 3	8	11	9 1/2	3 9/16	2 25/64	7 37/64	5/16	11/16	10 19/32	10 47/64	7 63/64"	2 15/16"	11/16	-	67.9
SCTE18 x 3 7/16	8	11	9 1/2	3 9/16	2 25/64	7 37/64	5/16	11/16	10 19/32	10 47/64	7 63/64	2 15/16	11/16	-	67.7
SCTE20 x 3	9 5/8	12 3/16	10 23/32	4 15/32	2 13/64	8 3/16	3/8	11/16	11 23/32	11 63/64	9 1/32	3 11/32	13/16	-	96.9
SCTE20 x 3 7/16	9 5/8	12 3/16	10 23/32	4 15/32	2 13/64	8 3/16	3/8	11/16	11 23/32	11 63/64	9 1/32	3 11/32	13/16	-	96.7
SCTE24 x 3 7/16	10	14 1/4	13 23/32	7 19/32	31/32	5 33/64	3/8	11/16	10 7/8	13 55/64	13 1/8	9 7/32	13/16 ▲	3 5/16"	133.0

Notes: Browning trough ends are drilled to fit CEMA Standard Troughs. The center holes are drilled to fit Browning screw conveyor drives.
▲2 "Z" holes in bottom flange only; no holes in top flange.