

TOP VIEW

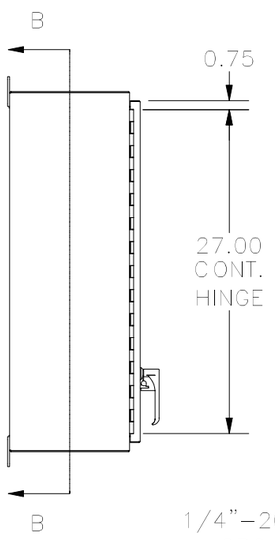

LEFT VIEW

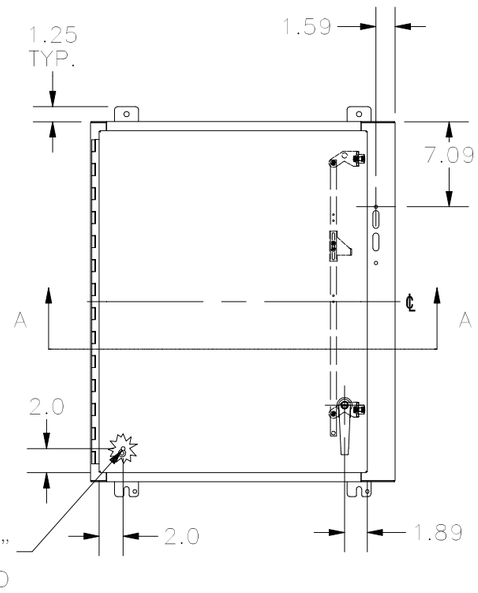

FRONT VIEW

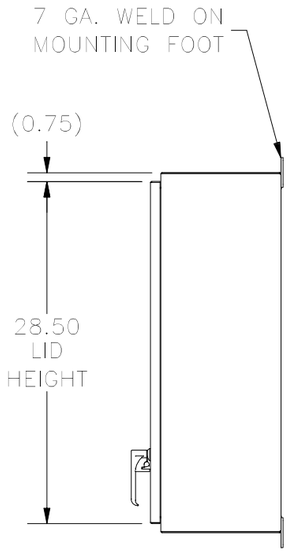

RIGHT VIEW

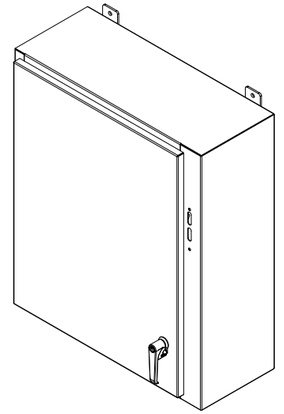

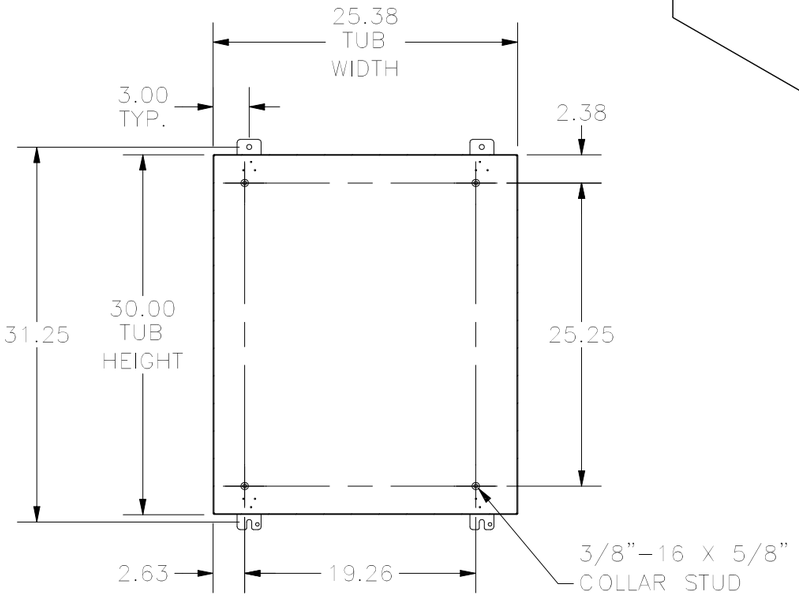

SECTION B-B
(INSIDE BACK OF ENCLOSURE)

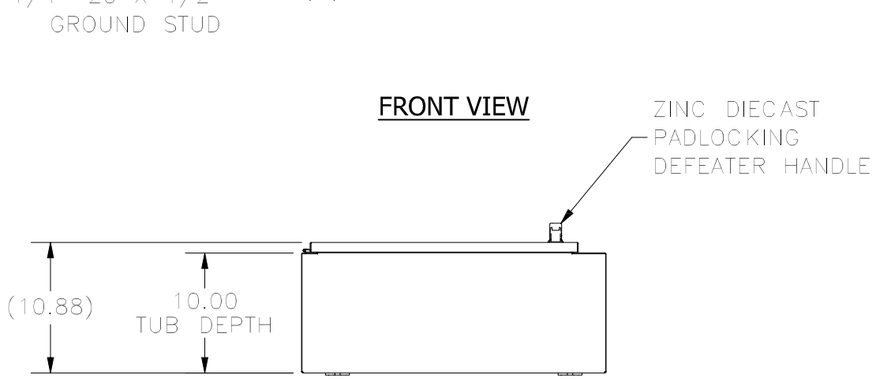

BOTTOM VIEW

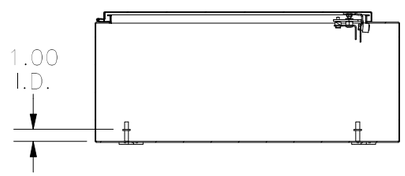

SECTION A-A
(INSIDE TOP OF ENCLOSURE)

PART#: SDN12302510PL
(DATA SUBJECT TO CHANGE WITHOUT NOTICE)

THIS DRAWING IS PROPERTY OF HUBBELL INC. WIEGMANN
ALL INFORMATION IS PROPRIETARY AND NOT TO BE DUPLICATED