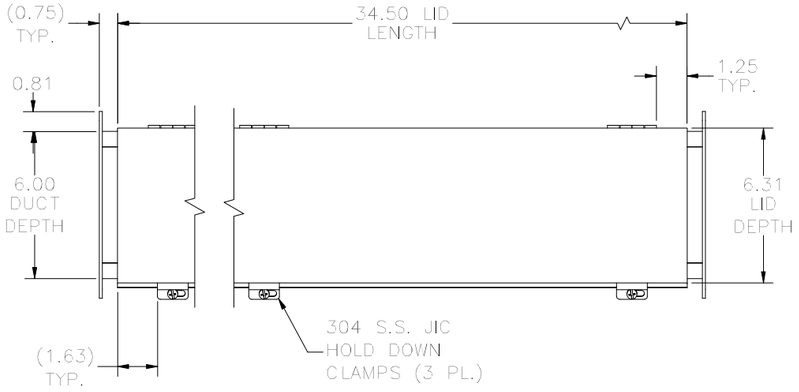


TOP VIEW

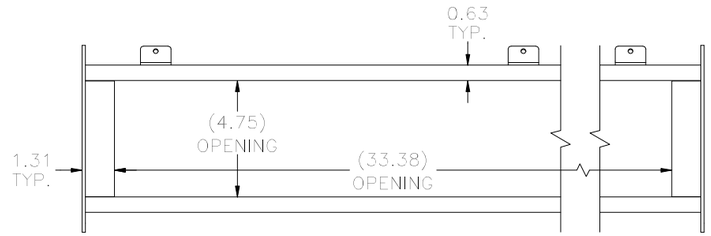


TOP VIEW (LID ASSM. NOT SHOWN)

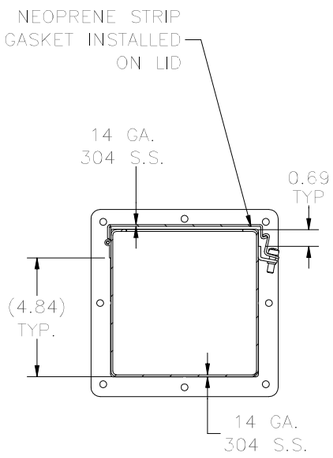


SECTION A-A VIEW

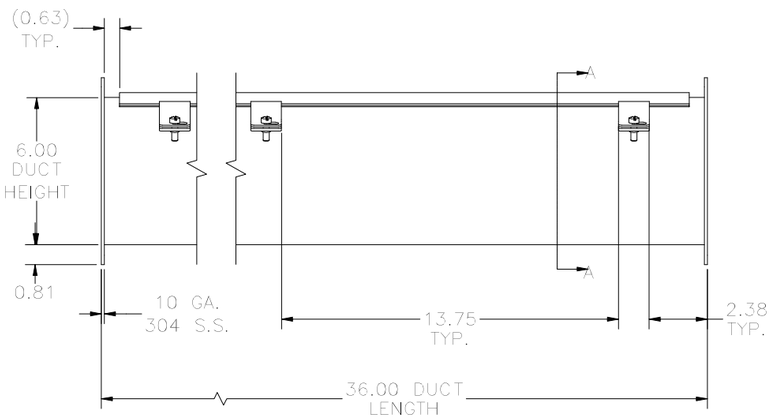


FRONT VIEW

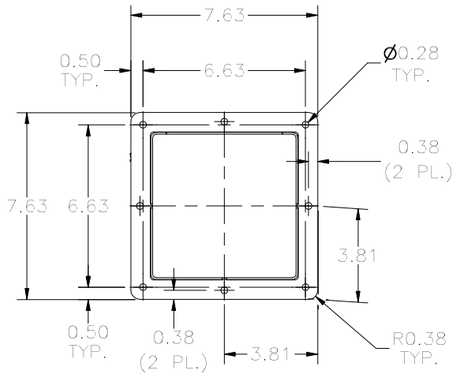


RIGHT SIDE VIEW

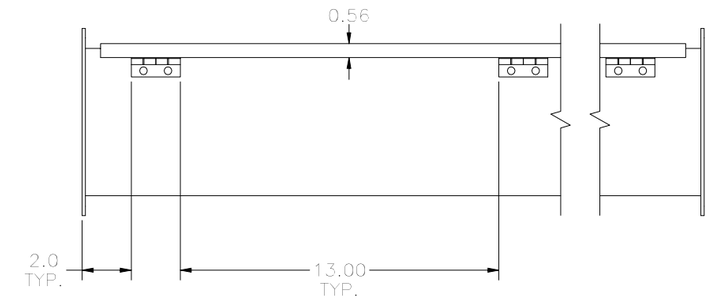


REAR VIEW



BOTTOM VIEW

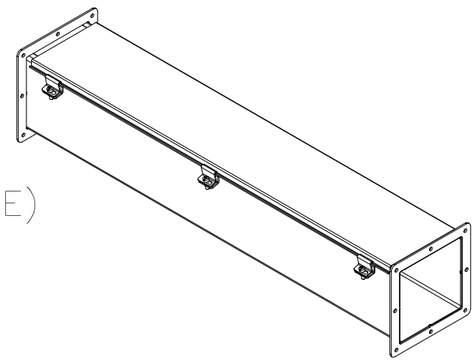

PART#: SSJW63
(DATA SUBJECT TO CHANGE WITHOUT NOTICE)

THIS DRAWING IS PROPERTY OF hUBBELL INC. WEIGMANN
ALL INFORMATION IS PROPRIETARY AND NOT TO BE DUPLICATED