


TOP VIEW

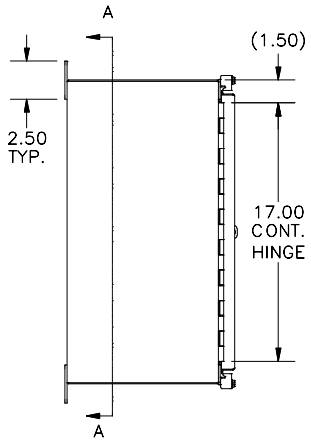


LEFT SIDE VIEW

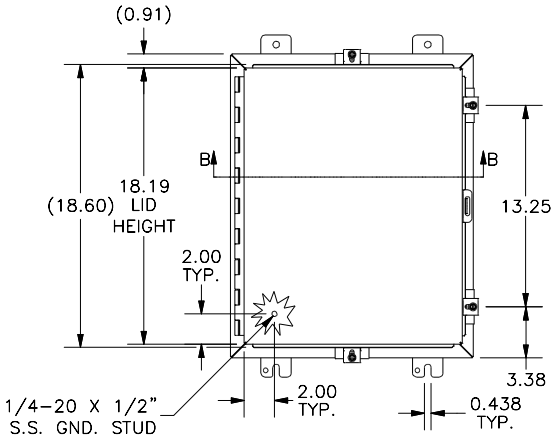


FRONT VIEW

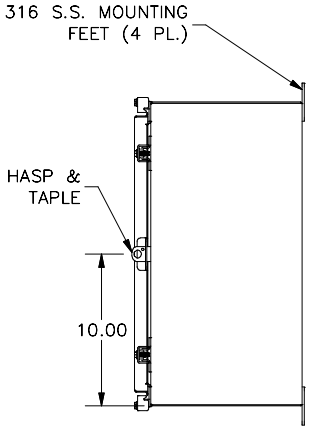


RIGHT SIDE VIEW

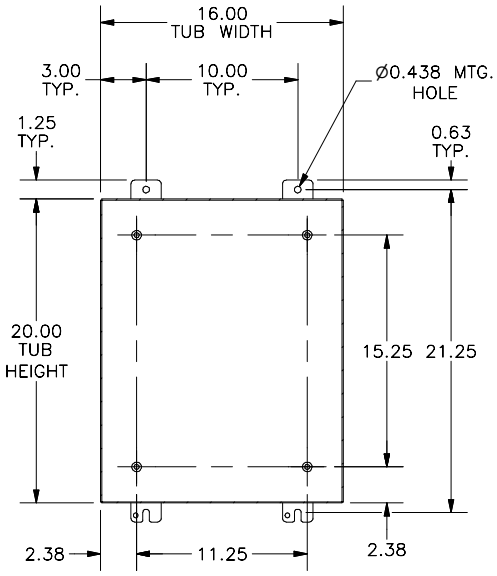


SECTION A-A
(INSIDE BACK OF ENCL.)

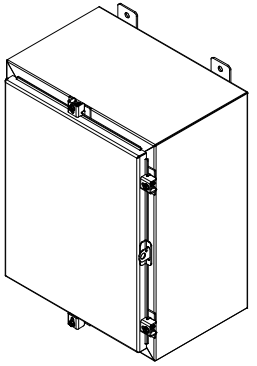

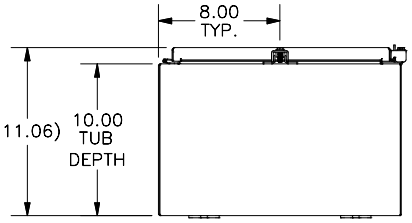


BOTTOM VIEW

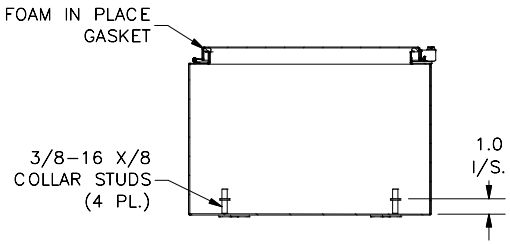


SECTION B-B
(INSIDE TOP OF ENCL.)

PART#: HWDSSN4201610A
(DATA SUBJECT TO CHANGE WITHOUT NOTICE)

THIS DRAWING IS PROPERTY OF HUBBELL INC. WIEGMANN
ALL INFORMATION IS PROPRIETARY AND NOT TO BE DUPLICATED