


TOP VIEW

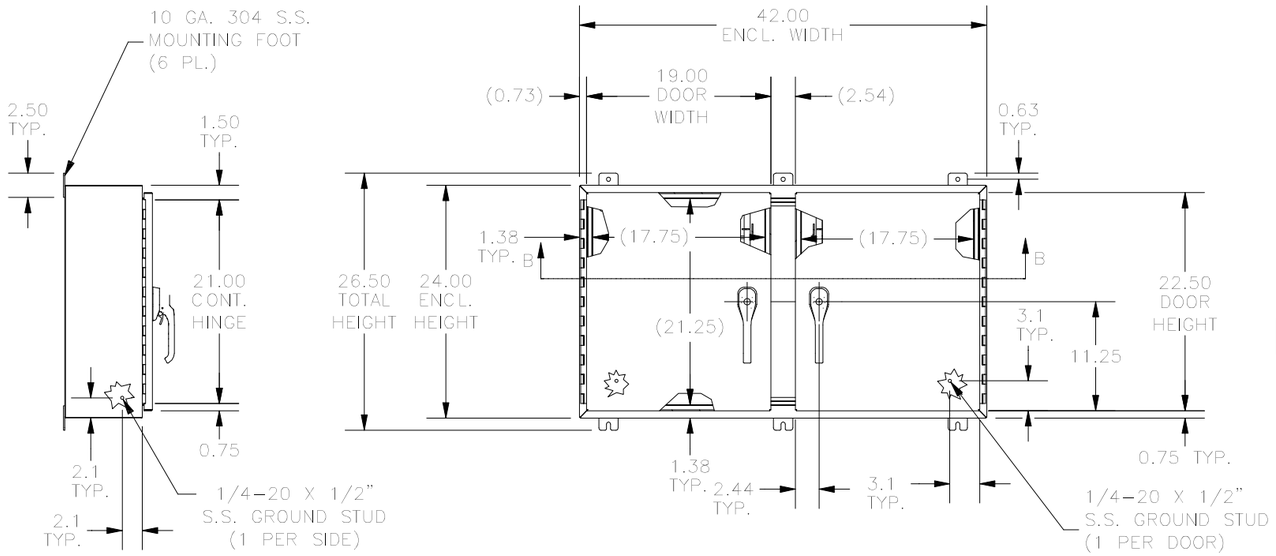


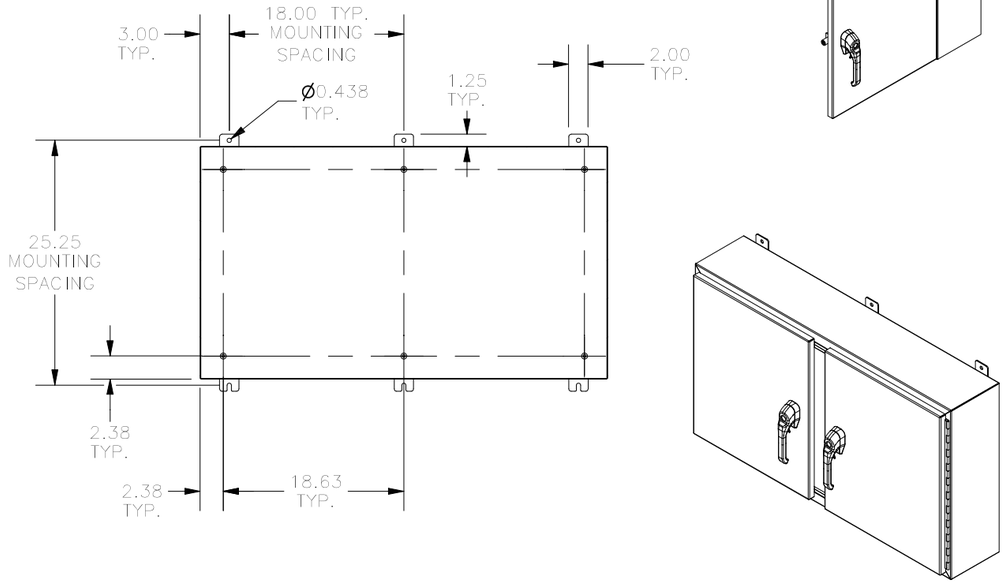


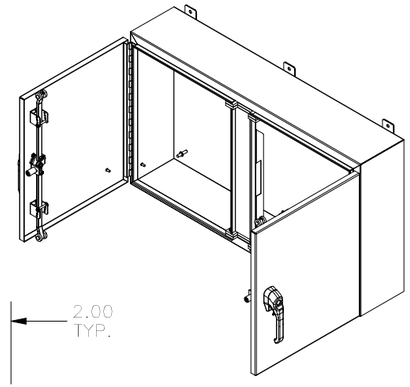



LEFT SIDE VIEW

RIGHT SIDE VIEW

FRONT VIEW

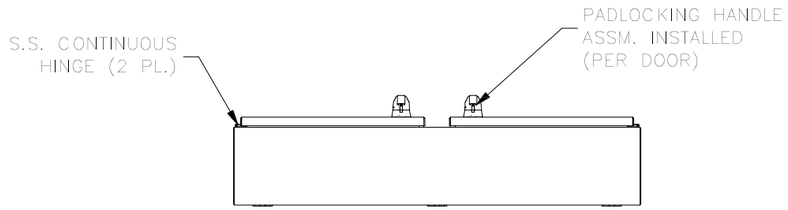


BOTTOM VIEW

SECTION A-A
(INSIDE BACK VIEW OF ENCL.)

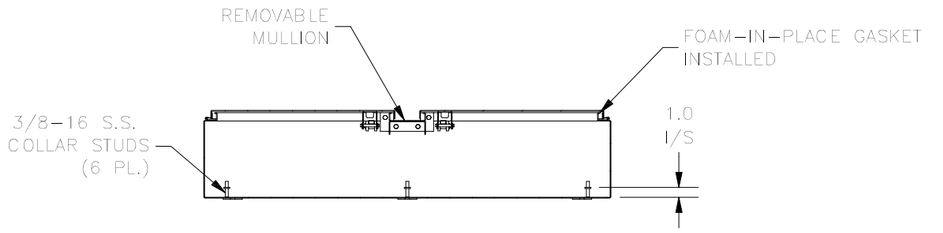


SECTION B-B
(INSIDE VIEW OF TOP)

PART#: SSN4244208WF3PT
(DATA SUBJECT TO CHANGE WITHOUT NOTICE)

THIS DRAWING IS PROPERTY OF HUBBELL INC. WIEGMANN
ALL INFORMATION IS PROPRIETARY AND NOT TO BE DUPLICATED