PART#: SSN4D7460123PTA
(DATA SUBJECT TO CHANGE WITHOUT NOTICE)

THIS DRAWING IS PROPERTY OF HUBBELL INC. WIEGMANN
ALL INFORMATION IS PROPRIETARY AND NOT TO BE DUPLICATED

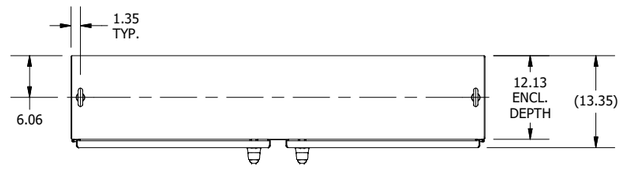

TOP VIEW

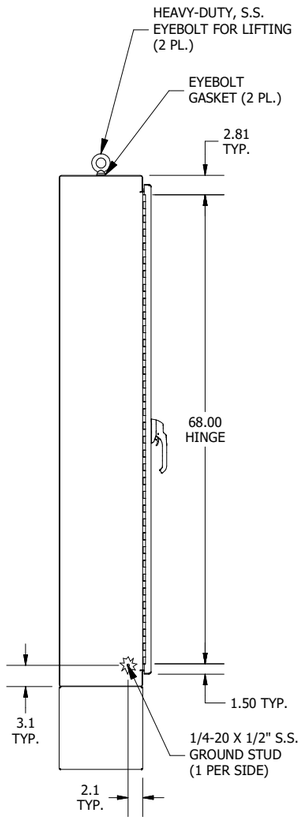

LEFT SIDE VIEW

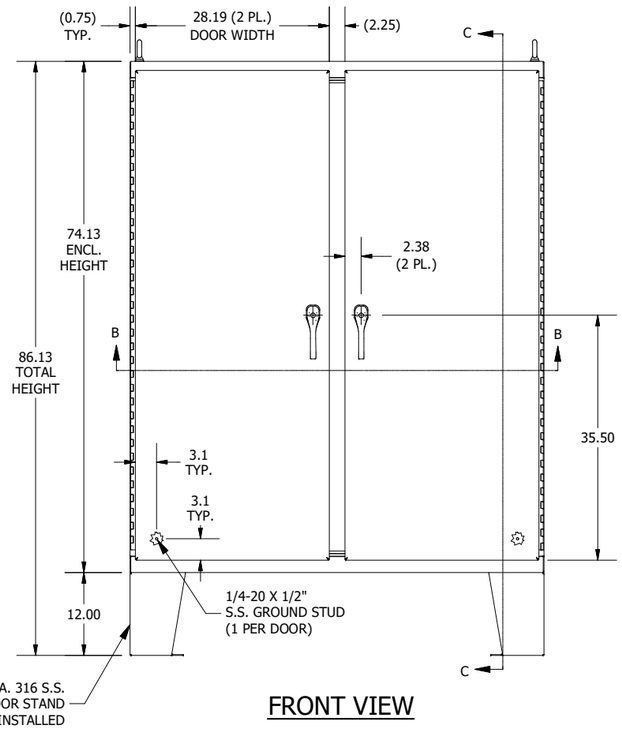

FRONT VIEW

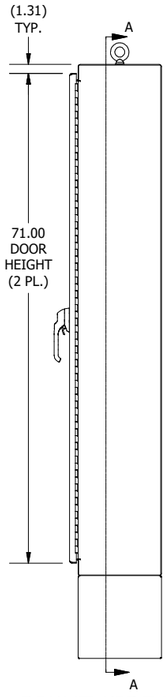

RIGHT SIDE VIEW

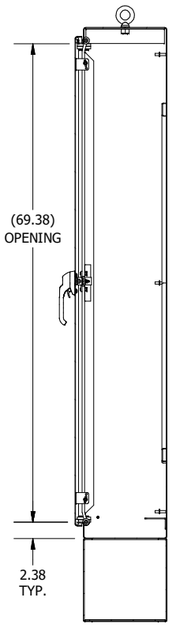

SECTION C-C
(INSIDE LEFT OF ENCL.)

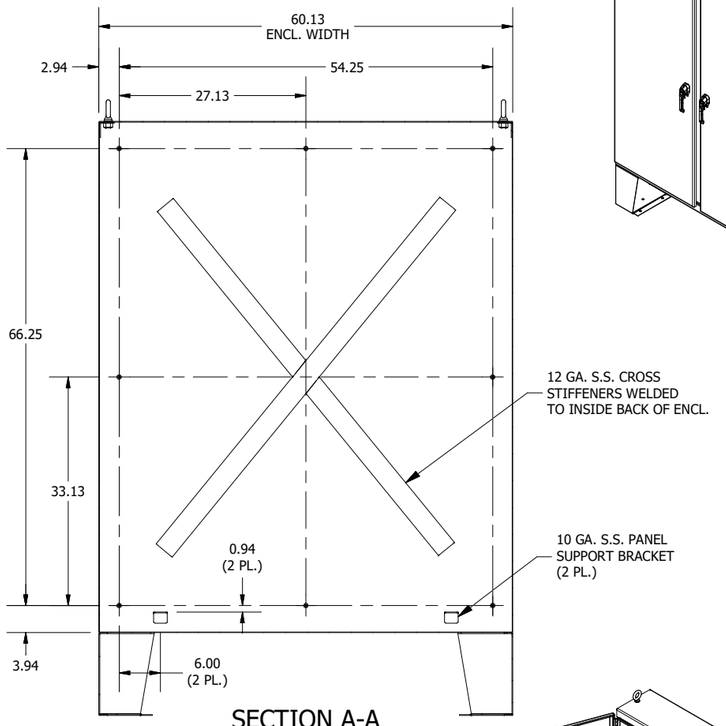

SECTION A-A
(INSIDE LEFT OF ENCL.)

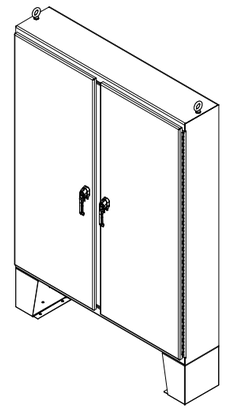

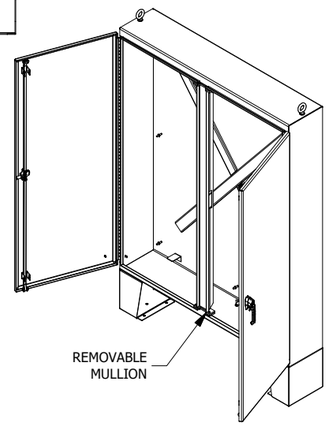

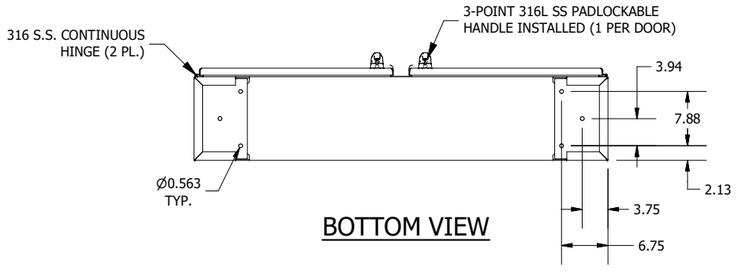

BOTTOM VIEW

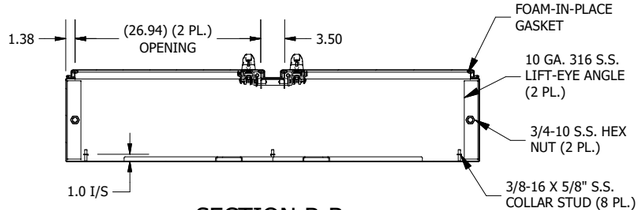

SECTION B-B
(INSIDE TOP OF ENCL.)