• CUSTOMER SERVICE • INNOVATION • MANUFACTURING • QUALITY • TECHNICAL EXPERTISE • EXCELLENCE • DESIGN •



DIXON

The Right Connection®

Hygienic Products

Customer Service: **+44 (0)1772 323529**

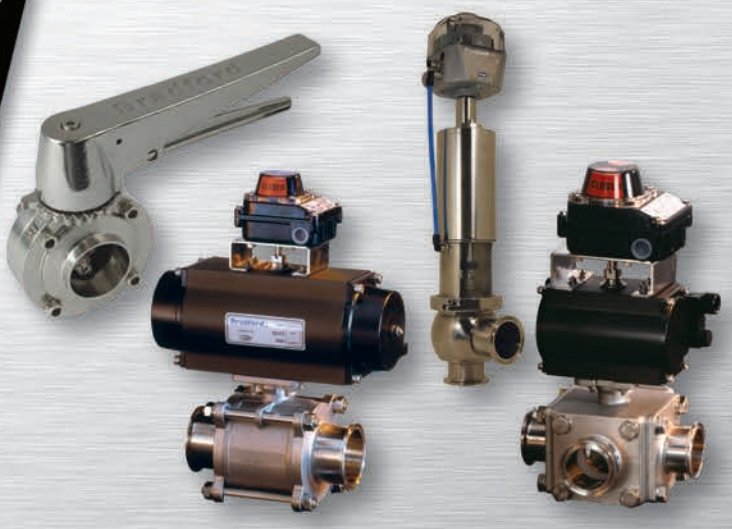

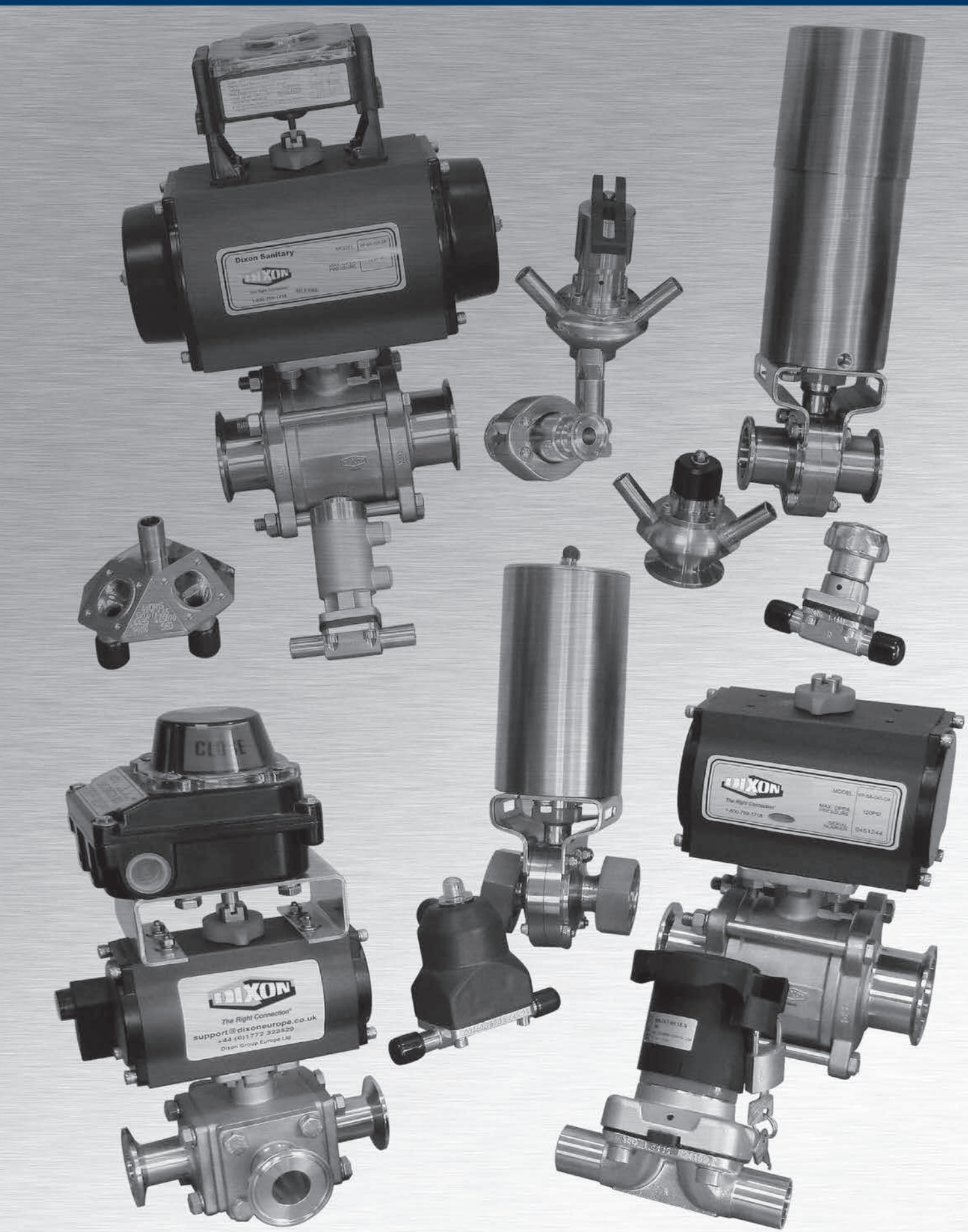

Telephone: +44 (0)1772 323529
Fax: +44 (0)1772 314664

Contents

Introduction 4

Hygienic Unions 6

Quick release fittings 36

Butt weld fittings 41

Hose assembly, fittings and accessories 52

Diaphragm Valves 60

Hygienic Accessories 95

Check Valves 100

Ball Valves 105

Butterfly Valves 113

Valve Automation Introduction 120

Dixon Seat Valves 141

Mixed Proof Valves 175

Pumps and Pump Cart 183

Filters and Strainers 185

Sample Valves 191

Fabrication and Tubing 205

Technical Information and Glossary 207

Hygienic, Fittings, Valves & Hose Assemblies

A

We are pleased to offer our customers one of the most extensive ranges for Food, Beverage, Pharmaceutical and Fine Chemical applications.

- Fittings & Clamps
- Gauges
- Valves
- Actuation
- Custom Fabrication
- Hose Assemblies
- Pumps



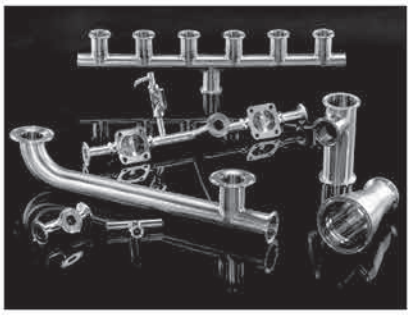







The Dixon range compliments the Holedall Hygienic and Sanbrew/Sanfood Hose range enabling us to offer a complete package of Fittings and Hose assemblies.

Whatever your requirement please call for the latest availability. Many items are available from stock or are made to order on very short lead times.

If you have special product or delivery requirements we have extensive design and manufacturing facilities which can be used to satisfy your requirements.

ELASTOMER AND THERMOPLASTIC CHARACTERISTICS

MATERIAL	BUNA	EPDM	VITON®	PTFE	SILICONE
Temperature	-50°C to 120°C	-48°C to 135°C	-30°C to 200°C	-35°C to 140°C	-35°C to 230°C
Acid	Good	Good to Excellent	Good to Excellent	Good to Excellent	Poor to Good
Alkali	Fair to Good	Good to Excellent	Poor to Good	Excellent	Poor to Fair
Fats/Oils	Good to Excellent	Poor*	Good to Excellent	Excellent	Poor to Good
Taste	Good	Good	Good	Excellent	Good
Odour	Good	Good	Good	Excellent	Good
Abrasion Resistance	Excellent	Good	Good	Fair	Good
Compression Set	Good	Fair	Good to Excellent	Cold Flows	Good to Excellent

Telephone: **+44 (0)1772 323529** Email: **sales@dixoneurope.co.uk**

Product Specifications

Size Range: 1/2" to 12" O.D.

Materials: G-304 Stainless Steel.
R-316L Stainless Steel.

Finish: 3A and UK Dairy as standard.
Other finishes available.

Note: all non-wetted parts are in 304. Example hex nuts, clamps, pipe hangers, actuator castings.

FINISH DESIGNATIONS FOR TUBING AND FITTINGS	
Finish Number	**Finish Conditions**
1	Mill Finish (bright annealed, pickled, sand blasted or tumbled).
3	w 180 grit inside diameter (ID) only.
5	Polished 150 grit outside diameter (OD) only. UK Dairy Standard.
7	Polished 180 grit outside / inside diameter (OD/ID).
3A	Polished 150 grit outside diameter (OD),180 grit inside diameter (ID).

FINISH SPECIFICATIONS			
Process	**RA micro inches**	**RA microns**	**ISO Designation**
150 grit	30 –35	0.720 – 0.875	N4
150 grit & Electropolish	12 - 20	0.300 – 0.500	
180 grit	20 – 25	0.500– 0.625	
180 grit & Electropolish	10 - 16	0.250 – 0.400	
240 grit	15 – 20	0.375 – 0.500	N5
240 grit & Electropolish	8 - 12	0.200 – 0.300	
340 grit	8 – 12	0.200 – 0.300	N6
340 grit & Electropolish	6 - 12	0.150 – 0.300	

Note: Additional Improvements to the surface finish require buffing and further electropolishing.
The effect is to improve the existing surface by about 50%.

Ordering Information and Part Numbers.

Please refer to the specific product page.

Specify quantity, Size (1/2" to 12 inch, equates 50 to 1200 in our part number system.)

Specify Material either 304 **(G)** or 316L **(R)** Stainless Steel.

Examples: 5 off, RJT **1 inch** Hex Nuts in 304 Stainless Steel: Part number 13H-**G100**RJT.
10 off, IDF **3 inch** Weld Liner in 316 Stainless Steel: Part number 14A-**R300**IDF.

European Connections

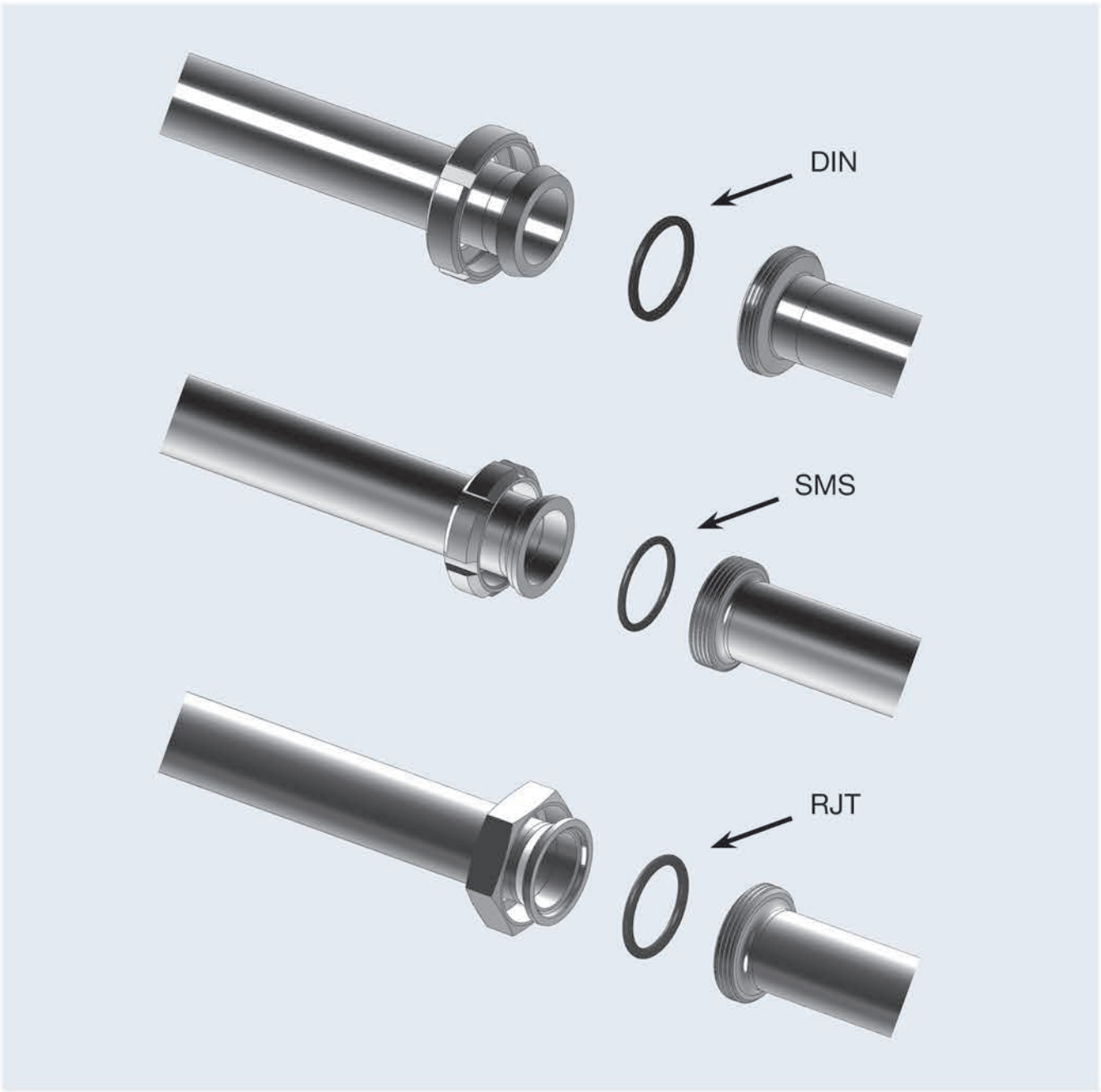

Product Specifications

Size range:
- 1" - 4" OD

Materials:
- G = 304 stainless steel
- R = 316 stainless steel

Finish:
- 3A sanitary finish ID and OD

Telephone: **+44 (0)1772 323529** Email: **sales@dixoneurope.co.uk**

RJT BS:4825



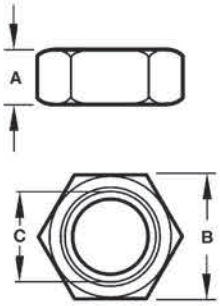

RJT HEX NUT RJT-13H				
PART NO.	SIZE	A (mm)	B (mm)	C (mm)
13H-G100RJT	1"	22.20	50.8	42.6* 8T
13H-G150RJT	1 1/2"	22.20	65.0	55.3* 6T
13H-G200RJT	2"	22.20	79.3	68.3* 6T
13H-G250RJT	2 1/2"	22.20	92.0	80.9* 6T
13H-G300RJT	3"	22.20	104.7	93.6* 6T
13H-G400RJT	4"	22.20	130.0	119.1* 6T

B

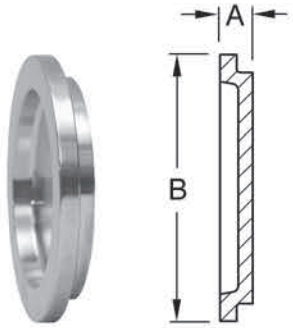

RJT BLANK CAP - 13RBN	
PART NO.	SIZE
13RBN-G100RJT	1"
13RBN-G150RJT	1 1/2"
13RBN-G200RJT	2"
13RBN-G250RJT	2 1/2"
13RBN-G300RJT	3"
13RBN-G400RJT	4"

Please note: Blanks can only be used with a matching nut



RJT HEX BLANK NUT WITH CHAIN -13HBN	
PART NO.	SIZE
13HBN-G100RJT	1"
13HBN-G150RJT	1 1/2"
13HBN-G200RJT	2"
13HBN-G250RJT	2 1/2"
13HBN-G300RJT	3"
13HBN-G400RJT	4"



EXCLUSIVE

RJT DOUBLE ENDED SPANNER				
PART NO.	SIZE	A	B	C
RJT-150100SP	1½" x 1"	305	65	50.8
RJT-200150SP	2" x 1½"	356	79.3	65
RJT-250200SP	2½" x 2"	419	92	79.3

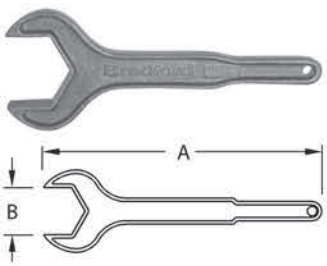

RJT SPANNER			
PART NO.	SIZE	A	B
RJT-1SP	1"	10.5	2.00
RJT-1.5SP	1½"	12.0	2.56
RJT-2SP	2"	14.0	3.12
RJT-2.5SP	2½"	16.3	3.62
RJT-3SP	3"	18.5	4.12
RJT-4SP	4"	19.5	5.12



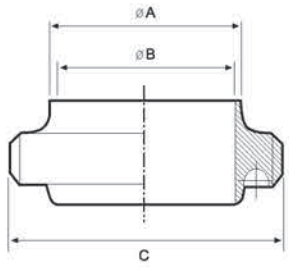

RJT WELDING MALE RJT-15

PART NO.	SIZE	A (mm)	B (mm)	C (mm)
15A-R100RJT	1"	25.65	22.20	45.72
15A-R150RJT	1 1/2"	38.35	34.90	58.42
15A-R200RJT	2"	51.05	47.60	72.72
15A-R250RJT	2 1/2"	63.75	60.30	85.42
15A-R300RJT	3"	76.45	73.00	98.12
15A-R400RJT	4"	101.85	97.60	123.52



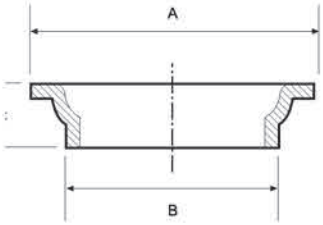

RJT PRESSED LINER

PART NO.	SIZE	A (mm)	B (mm)	C (mm)
H1RJTL	1"	41.3	32.5	12.7
H1.5RJTL	1 1/2"	54.0	45.2	12.7
H2RJTL	2"	66.7	58.0	12.7
H2.5RJTL	2 1/2"	79.4	70.6	12.7
H3RJTL	3"	92.1	83.5	12.7
H4RJTL	4"	117.5	108.3	12.7



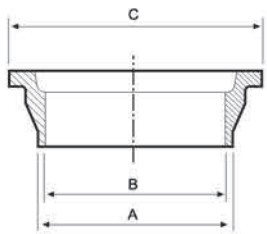

RJT WELDING LINER RJT-14

PART NO.	SIZE	A (mm)	B (mm)	C (mm)
14A-R100RJT	1"	25.65	22.20	41.30
14A-R150RJT	1 1/2"	38.35	34.90	54.00
14A-R200RJT	2"	51.05	47.60	66.70
14A-R250RJT	2 1/2"	63.75	60.30	79.40
14A-R300RJT	3"	76.45	73.00	92.10
14A-R400RJT	4"	101.85	97.60	117.50



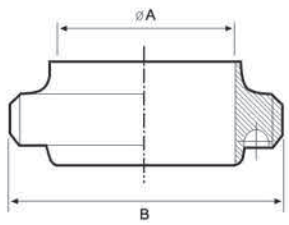

RJT EXPANDING MALE 15R

PART NO.	SIZE	A (mm)	B (mm)
15R-R100RJT	1"	22.20	45.72 * 8TPI
15R-R150RJT	1 1/2"	34.90	58.42 * 8TPI
15R-R200RJT	2"	47.60	78.72 * 6TPI
15R-R250RJT	2 1/2"	60.30	85.42 * 6TPI
15R-R250RJT	3"	73.00	98.12 * 6TPI
15R-R400RJT	4"	97.60	123.52 * 6TPI



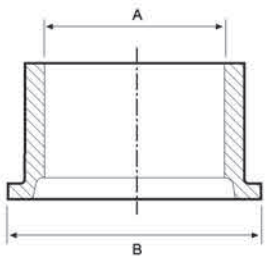

RJT EXPANDING LINER 14R

PART NO.	SIZE	A (mm)	B (mm)
14R-R100RJT	1"	22.20	41.30
14R-R150RJT	1 1/2"	34.90	54.00
14R-R200RJT	2"	47.60	66.70
14R-R250RJT	2 1/2"	60.30	79.40
14R-R300RJT	3"	73.00	92.10
14R-R400RJT	4"	97.60	117.50

Telephone: **+44 (0)1772 323529**

Email: **sales@dixoneurope.co.uk**

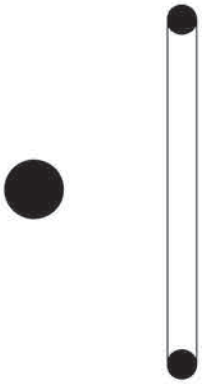

RJT O-RING / SILICONE			
PART NO.	SIZE	ID	OD
40MP-XW100RJT	1"	30	33.30
40MP-XW150RJT	1 1/2"	39.40	46.00
40MP-XW200RJT	2"	55.50	62.10
40MP-XW250RJT	2 1/2"	68.10	74.70
40MP-XW300RJT	3"	80.80	78.40
40MP-XW400RJT	4"	97.20	103.80

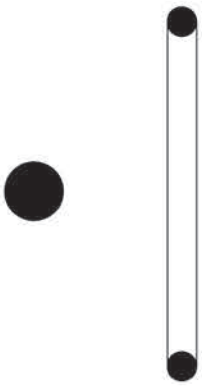

RJT O-RING / EPDM			
PART NO.	SIZE	ID	OD
40MP-E100RJT	1"	30	33.30
40MP-E150RJT	1 1/2"	39.40	46.00
40MP-E200RJT	2"	55.50	62.10
40MP-E250RJT	2 1/2"	68.10	74.70
40MP-E300RJT	3"	80.80	78.40
40MP-E400RJT	4"	97.20	103.80

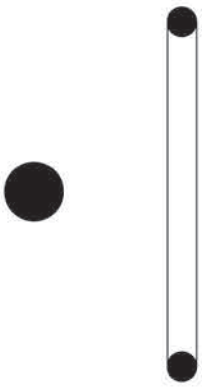

RJT O-RING / VITON®			
PART NO.	SIZE	ID	OD
40MP-SFY100RJT	1"	30	33.30
40MP-SFY150RJT	1 1/2"	39.40	46.00
40MP-SFY200RJT	2"	55.50	62.10
40MP-SFY250RJT	2 1/2"	68.10	74.70
40MP-SFY300RJT	3"	80.80	78.40
40MP-SFY400RJT	4"	97.20	103.80

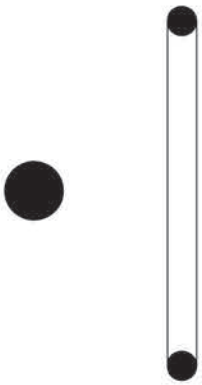

RJT O-RING / BUNA			
PART NO.	SIZE	ID	OD
40MP-U100RJT	1"	30	33.30
40MP-U150RJT	1 1/2"	39.40	46.00
40MP-U200RJT	2"	55.50	62.10
40MP-U250RJT	2 1/2"	68.10	74.70
40MP-U300RJT	3"	80.80	78.40
40MP-U400RJT	4"	97.20	103.80

PLEASE CALL FOR ALL YOUR OTHER RJT REQUIREMENTS. MANY OTHER PARTS AVAILABLE.

DIN 11851/11887, Couplings and Gaskets



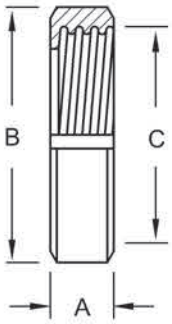

DIN ROUND NUT 11851 4 SLOTS				
PART NO.	SIZE	A (mm)	B (mm)	C (mm)
13R-G375DIN	DN10	18	38	28 x 1/8
13R-G050DIN	DN15	18	44	34 x 1/8
13R-G075DIN	DN20	20	54	44 x 1/6
13R-G100DIN	DN25	21	63	52 x 1/6
13R-G125DIN	DN32	21	70	58 x 1/6
13R-G150DIN	DN40	21	78	65 x 1/6
13R-G200DIN	DN50	22	92	78 x 1/6
13R-G250DIN	DN65	25	112	95 x 1/6
13R-G300DIN	DN80	30	127	110 x 1/4
13R-G400DIN	DN100	31	148	130 x 1/4

Please note: for sizes of 2.5" and over this nut has 6 slots



DIN BLANK	
PART NO.	SIZE
16AMP-R375DIN	DN10
16AMP-R050DIN	DN15
16AMP-R075DIN	DN20
16AMP-R100DIN	DN25
16AMP-R125DIN	DN32
16AMP-R150DIN	DN40
16AMP-R200DIN	DN50
16AMP-R250DIN	DN65
16AMP-R300DIN	DN80
16AMP-R400DIN	DN100

Please note: Blanks can only be used with a matching nut.



DIN BLANK NUT WITH CHAIN	
PART NO.	SIZE
13RBN-G375DIN	DN10
13RBN-G050DIN	DN15
13RBN-G075DIN	DN20
13RBN-G100DIN	DN25
13RBN-G125DIN	DN32
13RBN-G150DIN	DN40
13RBN-G200DIN	DN50
13RBN-G250DIN	DN65
13RBN-G300DIN	DN80
13RBN-G400DIN	DN100

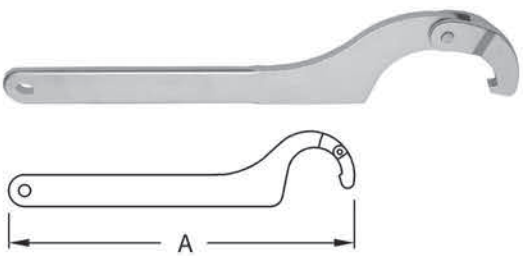

DIN SPANNER		
PART NO.	SIZE	A
DIN-SMS-60/90SP	1"- 1 1/2"	11.00
DIN-SMS-90/155SP	2"- 4"	13.00

For use on DIN or SMS Rounded Nuts.

Telephone: **+44 (0)1772 323529** Email: **sales@dixoneurope.co.uk**



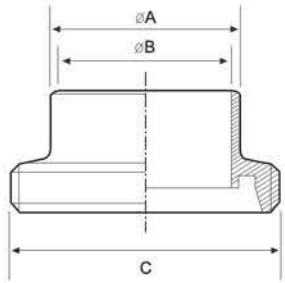

DIN WELD IMPERIAL

PART NO.	SIZE	A (mm)	B (mm)	C (mm)
15A-R375DIN	DN10	9.5	7.1	28 x 1/8
15A-R050DIN	DN15	12.7	10.3	34 x 1/8
15A-R075DIN	DN20	19	15.7	44 x 1/6
15A-R100DIN	DN25	25.4	22.1	52 x 1/6
15A-R125DIN	DN32	32	28.7	58 x 1/6
15A-R150DIN	DN40	38.1	34.8	65 x 1/6
15A-R200DIN	DN50	50.8	47.5	78 x 1/6
15A-R250DIN	DN65	63.5	60.2	95 x 1/6
15A-R300DIN	DN80	76.2	72.9	110 x 1/4
15A-R400DIN	DN100	101.6	97.6	130 x 1/4



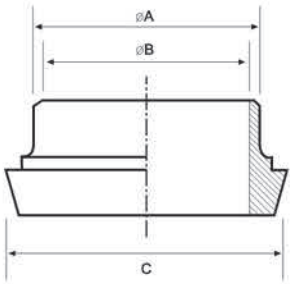

DIN WELD LINER IMPERIAL

PART NO.	SIZE	A (mm)	B (mm)	C (mm)
14A-R375DIN	DN10	9.5	7.1	22.5
14A-R050DIN	DN15	12.7	10.3	28.5
14A-R075DIN	DN20	19	15.7	36.5
14A-R100DIN	DN25	25.4	22.1	44
14A-R125DIN	DN32	32	28.7	50
14A-R150DIN	DN40	38.1	34.8	56
14A-R200DIN	DN50	50.8	47.5	68
14A-R250DIN	DN65	63.5	60.2	86
14A-R300DIN	DN80	76.2	72.9	100
14A-R400DIN	DN100	101.6	97.6	121



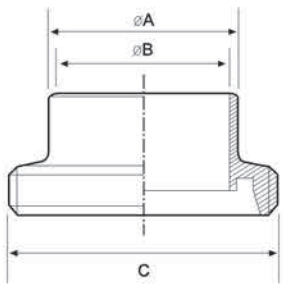

DIN WELD MALE METRIC

PART NO.	SIZE	A (mm)	B (mm)	C (mm)
15A-R375DINM	DN10	13	10	28 x 1/8
15A-R050DINM	DN15	19	16	34 x 1/8
15A-R075DINM	DN20	23	20	44 x 1/6
15A-R100DINM	DN25	29	26	52 x 1/6
15A-R125DINM	DN32	35	32	58 x 1/6
15A-R150DINM	DN40	41	38	65 x 1/6
15A-R200DINM	DN50	53	50	78 x 1/6
15A-R250DINM	DN65	70	66	95 x 1/6
15A-R300DINM	DN80	85	81	110 x 1/4
15A-R400DINM	DN100	104	100	130 x 1/4



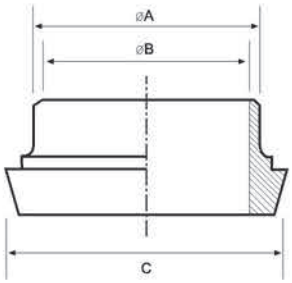

DIN WELD LINER METRIC

PART NO.	SIZE	A (mm)	B (mm)	C (mm)
14A-R375DINM	DN10	13	10	22.5
14A-R050DINM	DN15	19	16	28.5
14A-R075DINM	DN20	26	20	36.5
14A-R100DINM	DN25	29	26	44
14A-R125DINM	DN32	35	32	50
14A-R150DINM	DN40	41	38	56
14A-R200DINM	DN50	53	50	68
14A-R250DINM	DN65	70	66	86
14A-R300DINM	DN80	85	81	100
14A-R400DINM	DN100	104	100	121

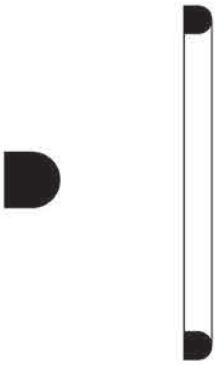

GASKET FOR DIN / SILICONE			
PART NO.	SIZE	ID	OD
40MP-S20MDIN	DN20	23	33
40MP-S25MDIN	DN25	30	40
40MP-S32MDIN	DN32	36	46
40MP-S40MDIN	DN40	42	52
40MP-S50MDIN	DN50	54	64
40MP-S65MDIN	DN65	71	81
40MP-S80MDIN	DN80	85	95
40MP-S100MDIN	DN100	104	114

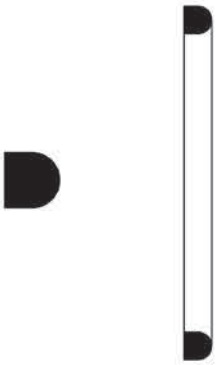

GASKET FOR DIN / EPDM			
PART NO.	SIZE	ID	OD
40MP-E10MDIN	DN10	12	20
40MP-E15MDIN	DN15	18	26
40MP-E20MDIN	DN20	23	33
40MP-E25MDIN	DN25	30	40
40MP-E32MDIN	DN32	36	46
40MP-E40MDIN	DN40	42	52
40MP-E50MDIN	DN50	54	64
40MP-E65MDIN	DN65	71	81
40MP-E80MDIN	DN80	85	95
40MP-E100MDIN	DN100	104	114

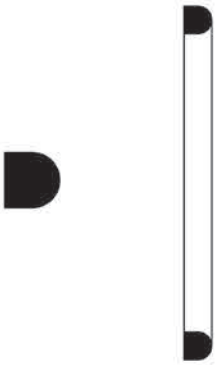

GASKET FOR DIN / VITON®			
PART NO.	SIZE	ID	OD
40MP-V20MDIN	DN20	23	33
40MP-V25MDIN	DN25	30	40
40MP-V32MDIN	DN32	36	46
40MP-V40MDIN	DN40	42	52
40MP-V50MDIN	DN50	54	64
40MP-V65MDIN	DN65	71	81
40MP-V80MDIN	DN80	85	95
40MP-V100MDIN	DN100	104	114

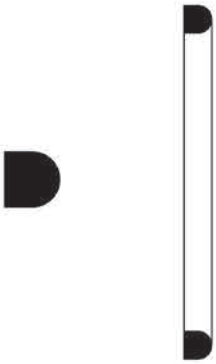

GASKET FOR DIN / BUNA			
PART NO.	SIZE	ID	OD
40MP-U20MDIN	DN20	23	33
40MP-U25MDIN	DN25	30	40
40MP-U32MDIN	DN32	36	46
40MP-U40MDIN	DN40	42	52
40MP-U50MDIN	DN50	54	64
40MP-U65MDIN	DN65	71	81
40MP-U80MDIN	DN80	85	95
40MP-U100MDIN	DN100	104	114

PLEASE CALL FOR ALL YOUR OTHER DIN REQUIREMENTS. MANY OTHER PARTS AVAILABLE.

Telephone: **+44 (0)1772 323529** Email: **sales@dixoneurope.co.uk**

IDF BS:4825 Part 4 Couplings and Gaskets



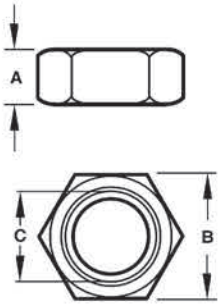

IDF HEX NUT				
PART NO.	SIZE	A (mm)	B (mm)	C (mm)
13H-G100IDF	1"	30	46	34.34 x 8T ACME
13H-G150IDF	1 1/2"	30	60	47.86 X 8T ACME
13H-G200IDF	2"	30	75	61.37 X 8T ACME
13H-G250IDF	2 1/2"	30	90	74.88 X 8T ACME
13H-G300IDF	3"	30	105	88.40 X 8T ACME
13H-G400IDF	4"	34.9	133	122.05 X 6T ACME



IDF BLANK CAP	
PART NO.	SIZE
16AMP-R100IDF	1"
16AMP-R150IDF	1 1/2"
16AMP-R200IDF	2"
16AMP-R250IDF	2 1/2"
16AMP-R300IDF	3"
16AMP-R400IDF	4"

Please note: Blanks can only be used with a matching nut.



IDF BLANK NUT WITH CHAIN	
PART NO.	SIZE
13HBN-G100IDF	1"
13HBN-G150IDF	1 1/2"
13HBN-G200IDF	2"
13HBN-G250IDF	2 1/2"
13HBN-G300IDF	3"
13HBN-G400IDF	4"



IDF SPANNER	
PART NO.	SIZE
IDF-1SP	1"
IDF-2SP	1 1/2"
IDF-2SP	2"
IDF2.5SP	2 1/2"
IDF-3SP	3"
IDF-4SP	4"



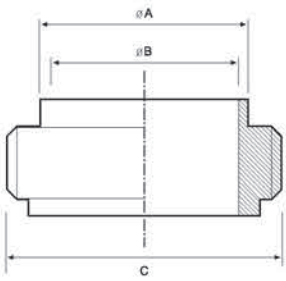

IDF WELD MALE

PART NO.	SIZE	A (mm)	B (mm)	C (mm)
15A-R100IDF	1"	25.4	22.1	37.13 x 8T
15A-R150IDF	1 1/2"	38.1	34.8	50.65 x 8T
15A-R200IDF	2"	50.8	47.5	64.16 x 8T
15A-R250IDF	2 1/2"	63.5	60.2	77.67 x 8T
15A-R300IDF	3"	76.2	72.9	91.19 x 8T
15A-R400IDF	4"	101.6	97.6	125.9 x 6T



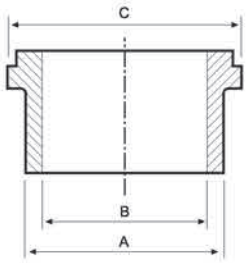

IDF WELD LINER

PART NO.	SIZE	A (mm)	B (mm)	C (mm)
14A-R100IDF	1"	25.4	22.1	33.80
14A-R150IDF	1 1/2"	38.1	34.8	47.00
14A-R200IDF	2"	50.8	47.5	60.50
14A-R250IDF	2 1/2"	63.5	60.2	74.00
14A-R300IDF	3"	76.2	72.9	87.50
14A-R400IDF	4"	101.6	97.6	120.60



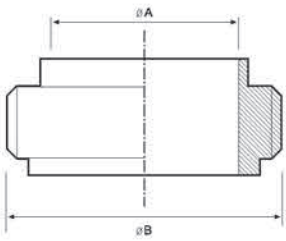

IDF EXPANDING MALE

PART NO.	SIZE	A (mm)	B (mm)
15R-R100IDF	1"	22.20	37.13 x 8T
15R-R150IDF	1 1/2"	34.90	50.65 x 8T
15R-R200IDF	2"	47.60	64.16 x 8T
15R-R250IDF	2 1/2"	60.30	77.67 x 8T
15R-R300IDF	3"	73.00	91.19 x 8T
15R-R350IDF	4"	97.60	125.9 x 6T



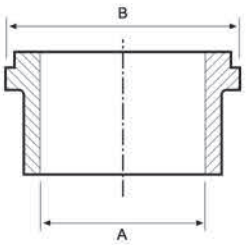

IDF EXPANDING LINER

PART NO.	SIZE	A (mm)	B (mm)
14R-R100IDF	1"	22.30	33.80
14R-R150IDF	1 1/2"	34.90	47.00
14R-R200IDF	2"	47.60	60.50
14R-R250IDF	2 1/2"	60.30	74.00
14R-R300IDF	3"	73.00	87.50
14R-R400IDF	4"	97.60	120.60

Telephone: **+44 (0)1772 323529**

Email: **sales@dixoneurope.co.uk**



SEAL TYPE IDF O-RING EPDM			
PART NO.	SIZE	ID	OD
40MP-E100IDF	1"	23.20	32.50
40MP-E150IDF	1 1/2"	35.90	46.00
40MP-E200IDF	2"	48.60	59.50
40MP-E250IDF	2 1/2"	61.30	73.20
40MP-E300IDF	3"	74.00	86.50
40MP-E400IDF	4"	98.60	119.00



SEAL TYPE IDF O-RING VITON®			
PART NO.	SIZE	ID	OD
40MP-SFY100IDF	1"	23.20	32.50
40MP-SFY150IDF	1 1/2"	35.90	46.00
40MP-SFY200IDF	2"	48.60	59.50
40MP-SFY250IDF	2 1/2"	61.30	73.20
40MP-SFY300IDF	3"	74.00	86.50
40MP-SFY400IDF	4"	98.60	119.00



SEAL TYPE IDF O-RING BUNA (NITRILE)			
PART NO.	SIZE	ID	OD
40MP-U100IDF	1"	23.20	32.50
40MP-U150IDF	1 1/2"	35.90	46.00
40MP-U200IDF	2"	48.60	59.50
40MP-U250IDF	2 1/2"	61.30	73.20
40MP-U300IDF	3"	74.00	86.50
40MP-U400IDF	4"	98.60	119.00



GASKET FOR IDF / SILICONE			
PART NO.	SIZE	ID	OD
40MP-X100IDF	1"	23.20	32.50
40MP-X150IDF	1 1/2"	35.90	46.00
40MP-X200IDF	2"	48.60	59.50
40MP-X250IDF	2 1/2"	61.30	73.20
40MP-X300IDF	3"	74.00	86.50
40MP-X400IDF	4"	98.60	119.00

PLEASE CALL FOR ALL YOUR OTHER IDF REQUIREMENTS. MANY OTHER PARTS AVAILABLE.

SMS Unions, Tools & Gaskets

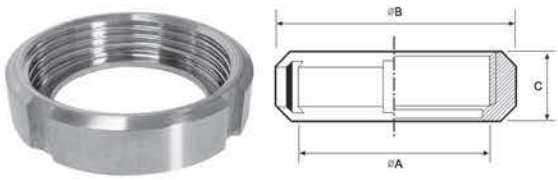

SMS NUT 6 SLOTS				
PART NO.	SIZE	A (mm)	B (mm)	C (mm)
13R-G100SMS	1"	40 x 1/6	51.00	19.00
13R-G150SMS	1 1/2"	60 x 1/6	74.00	23.00
13R-G200SMS	2"	70 x 1/6	84.00	24.00
13R-G250SMS	2 1/2"	85 x 1/6	100.00	28.00
13R-G300SMS	3"	98 x 1/6	114.00	30.00
13R-G400SMS	4"	125 x 1/4	138.00	31.00



SMS BLANK	
PART NO.	SIZE
16AMP-R100SMS	1"
16AMP-R150SMS	1 1/2"
16AMP-R200SMS	2"
16AMP-R250SMS	2 1/2"
16AMP-R300SMS	3"
16AMP-R400SMS	4"

Please note: To be used with a matching nut.



SMS BLANK NUT 6 SLOTS WITH CHAIN	
PART NO.	SIZE
13RBN-G100SMS	1"
13RBN-G150SMS	1 1/2"
13RBN-G200SMS	2"
13RBN-G250SMS	2 1/2"
13RBN-G300SMS	3"
13RBN-G400SMS	4"

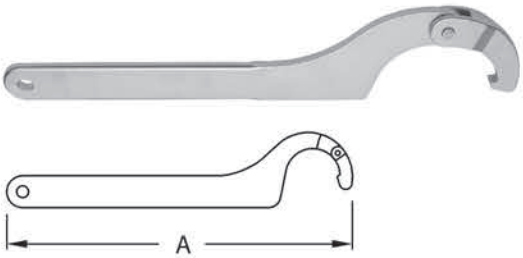

SMS SPANNER		
PART NO.	SIZE	A
DIN-SMS-60/90SP	1"- 1 1/2"	11.00
DIN-SMS-90/155SP	2"- 4"	13.00

For use on DIN or SMS Rounded Nuts.

Telephone: **+44 (0)1772 323529** Email: **sales@dixoneurope.co.uk**



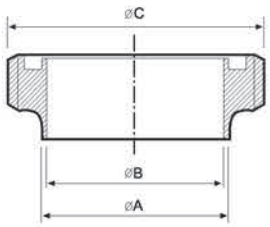

SMS WELD MALE

PART NO.	SIZE	A (mm)	B (mm)	C (mm)
15A-R100SMS	1"	25.4	22.1	40x1/6
15A-R150SMS	1 1/2"	38.1	34.8	60x1/6
15A-R200SMS	2"	50.8	47.5	70x1/6
15A-R250SMS	2 1/2"	63.5	60.2	85x1/6
15A-R300SMS	3"	76.2	72.9	98x1/6
15A-R400SMS	4"	101.6	97.6	125x1/4



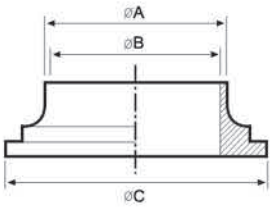

SMS WELD LINER

PART NO.	SIZE	A (mm)	B (mm)	C (mm)
14A-R100SMS	1"	25.4	22.1	35.50
14A-R150SMS	1 1/2"	38.1	34.8	55.00
14A-R200SMS	2"	50.8	47.5	65.00
14A-R250SMS	2 1/2"	63.5	60.2	80.00
14A-R300SMS	3"	76.2	72.9	93.00
14A-R400SMS	4"	101.6	97.6	118.00



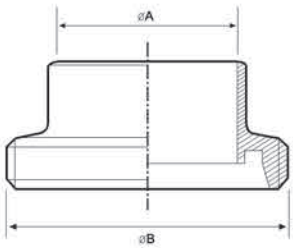

SMS EXPANDING MALE

PART NO.	SIZE	A (mm)	B (mm)
15R-R100SMS	1"	22.20	40x1/6
15R-R150SMS	1 1/2"	34.90	60x1/6
15R-R200SMS	2"	47.60	70x1/6
15R-R250SMS	2 1/2"	60.30	85x1/6
15R-R300SMS	3"	73.00	98x1/6
15R-R400SMS	4"	97.60	125x1/4



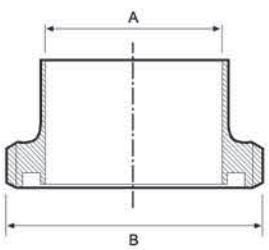

SMS EXPANDING LINER

PART NO.	SIZE	A (mm)	B (mm)
14R-R100SMS	1"	22.20	35.50
14R-R150SMS	1 1/2"	34.90	55.00
14R-R200SMS	2"	47.60	65.00
14R-R250SMS	2 1/2"	60.30	80.00
14R-R300SMS	3"	73.00	93.00
14R-R400SMS	4"	97.60	118.00

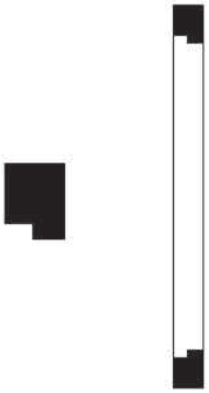

SMS SEAL RING L TYPE SILICONE			
PART NO.	SIZE	ID	OD
40MP-XW100SMS	1"	22.80	31.80
40MP-XW150SMS	1 1/2"	35.80	47.80
40MP-XW200SMS	2"	48.80	60.80
40MP-XW250SMS	2 1/2"	61.00	73.30
40MP-XW300SMS	3"	73.40	85.80
40MP-XW400SMS	4"	98.20	115.70

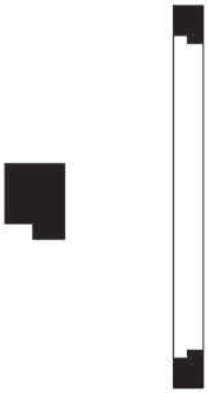

SMS SEAL RING L TYPE EPDM			
PART NO.	SIZE	ID	OD
40MP-E100SMS	1"	22.80	31.80
40MP-E150SMS	1 1/2"	35.80	47.80
40MP-E200SMS	2"	48.80	60.80
40MP-E250SMS	2 1/2"	61.00	73.30
40MP-E300SMS	3"	73.40	85.80
40MP-E400SMS	4"	98.20	115.70

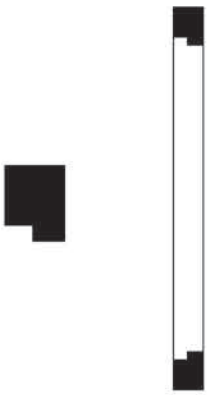

SEAL TYPE SMS O-RING VITON®			
PART NO.	SIZE	ID	OD
40MP-SFY100SMS	1"	22.80	31.80
40MP-SFY150SMS	1 1/2"	35.80	47.80
40MP-SFY200SMS	2"	48.80	60.80
40MP-SFY250SMS	2 1/2"	61.00	73.30
40MP-SFY300SMS	3"	73.40	85.80
40MP-SFY400SMS	4"	98.20	115.70

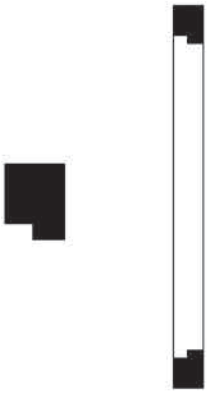

SEAL TYPE SMS O-RING BUNA (NITRILE)			
PART NO.	SIZE	ID	OD
40MP-U100SMS	1"	22.80	31.80
40MP-U150SMS	1 1/2"	35.80	47.80
40MP-U200SMS	2"	48.80	60.80
40MP-U250SMS	2 1/2"	61.00	73.30
40MP-U300SMS	3"	73.40	85.80
40MP-U400SMS	4"	98.20	115.70

PLEASE CALL FOR ALL YOUR OTHER SMS REQUIREMENTS. MANY OTHER PARTS AVAILABLE.

Telephone: **+44 (0)1772 323529** Email: **sales@dixoneurope.co.uk**

CLAMP - FERRULES CROSS REFERENCE TABLE

IMPERIAL US/BS		BPE		CLAMP TYPE		
FERRULE SIZE (Tube O.D.) (Inch & DIN)	A	B	C	DIN	13MHHM	13MHP
½"	9.5	12.7	25.4	-	½"-¾"	-
¾"	15.8	19.0	25.4	-	½"-¾"	-
DN10	10.0	13.0	34.0	DN10-20	-	-
DN15	16.0	19.0	34.0	DN10-20	-	-
DN20	20.0	23.0	34.0	DN10-20	-	-
1"	22.2	25.4	50.5	DN25	1-1½"	1-1½"
DN25	26.0	29.0	50.5	DN25	1-1½"	1-1½"
DN32	32.0	35.0	50.5	DN25	1-1½"	1-1½"
1½"	34.9	38.1	50.5	DN25	1-1½"	1-1½"
DN40	38.0	41.0	50.5	DN25	1-1½"	1-1½"
2"	47.6	50.8	64.0	DN50	2"	2"
DN50	50.0	53.0	64.0	DN50	2"	2"
2 ½"	60.3	63.5	77.5	-	2½"	2½"
DN65	66.0	70.0	91.0	DN65	3"	3"
3"	73.0	76.2	91.0	DN65	3"	3"
DN80	81.0	85.0	106.0	DN80	-	-
3½"	84.7	88.9	106.0	DN80	-	-
4"	97.6	101.6	119.0	DN100	4"	4"
DN100	100.0	104.0	119.0	DN100	4"	4"
DN115	110.3	114.3	130.0	DN115	-	-
4½"	110.3	114.95	130.0	DN115	-	-
5"	123.0	127.0	144.4	-	-	-
DN125	125.0	129.0	155.0	DN125	-	-
5½"	135.76	140.55	155.0	DN125	-	-
6"	146.8	152.5	166.9	-	6"	6"
154mm	150.0	154.0	166.9	-	6"	6"
DN150	150.0	154.0	183.0	DN150	-	-
6.63"	163.1	169.35	183.0	DN150	-	-
8"	197.6	203.2	217.7	-	8"	-
204mm	200.0	204.0	217.7	-	8"	-
DN200	200.0	204.0	233.5	DN200		
8.63"	213.9	220.55	233.5	DN200		
10"	247.2	254.1	268.5	DN250		
254mm	250.1	254.1	268.5	DN250		
10.63"	266.3	273.0	286.1	-		
12"	298.0	304.9	319.3	DN300		
DN300	300.0	304.0	319.3	DN300		
304mm	300.8	304.8	319.3	DN300		

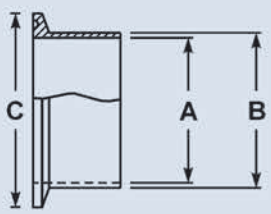

Clamp Type BS:4825 Part 3 Couplings and Gaskets

Service ratings are based on hydrostatic tests using standard-moulded Buna-N material gaskets, with proper installation of ferrules, assembly of joints and absence of shock pressure. Contact Dixon Hygienic for service of other type and material gaskets, and for ratings at higher temperatures. All ratings shown are dependent upon related components within the systems and proper installation. **For temperatures above 121°C /250°F, we recommend using only 13MHP clamps.** This information is only valid if Dixon clamps, ferrules and gaskets are used.

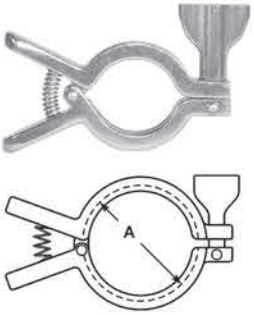

SINGLE PIN SQUEEZE CLAMPS – 13MHHM-Q

PART NO.	TUBE O.D.	SERVICE PRESSURE RATING (PSI/BAR) @ 70°F/21°C	SERVICE PRESSURE RATING (PSI/BAR) @ 250°F/121°C	DIMENSION A
13MHHM-Q75	1/2" - 3/4"	1500/103	1200/82	26.97
13MHHM-Q100-150	1" - 1 1/2"	500/34	300/20	53.90
13MHHM-Q200	2"	450/31	250/17	67.41
13MHHM-Q250	2 1/2"	400/27	200/13	80.91
13MHHM-Q300	3"	350/24	175/12	94.41
13MHHM-Q400	4"	300/20	150/10	122.43

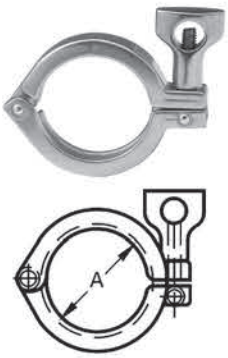

SINGLE PIN HEAVY DUTY CLAMP – 13MHHM

PART NO.	TUBE O.D.	SERVICE PRESSURE RATING (PSI/BAR) @ 70°F/21°C	SERVICE PRESSURE RATING (PSI/BAR) @ 250°F/121°C	DIMENSION A
13MHHM50-75	1/2" - 3/4"	1500/103	1200/82	26.97
13MHHM100-150	1" - 1 1/2"	500/34	300/20	53.90
13MHHM200	2"	450/31	250/17	67.41
13MHHM250	2 1/2"	400/27	200/13	80.91
13MHHM300	3"	350/24	175/12	94.41
13MHHM400	4"	300/20	150/10	122.43
13MHHM600	6"	150/10	75/5	170.05
13MHHM800	8"	100/6	50/3.45	220.85

* Also available in 316 Stainless Steel.



DOUBLE PIN HEAVY DUTY CLAMP – 13MHHM – DP

PART NO.	TUBE O.D.	SERVICE PRESSURE RATING (PSI/BAR) @ 70°F/21°C	SERVICE PRESSURE RATING (PSI/BAR) @ 250°F/121°C	DIMENSION A
13MHHM-DP100-150	1" - 1 1/2"	500/34	300/20	53.90
13MHHM-DP200	2"	450/31	250/17	67.41
13MHHM-DP250	2 1/2"	400/27	200/13	80.91
13MHHM-DP300	3"	350/24	175/12	94.41
13MHHM-DP400	4"	300/20	150/10	122.43
13MHHM-DP1000	10"	100/6	50/3.45	272.80

* Also available in 316 Stainless Steel.

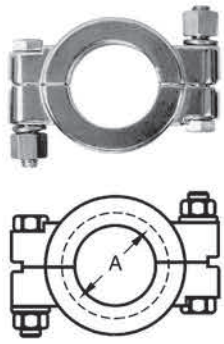

HYGIENIC CLAMPS / BOLTED CLAMP – 13MHP

PART NO.	TUBE O.D.	SERVICE PRESSURE RATING (PSI/BAR) @ 70°F/21°C	SERVICE PRESSURE RATING (PSI/BAR) @ 250°F/121°C	DIMENSION A
13MHP75	1/2" - 3/4"	1500/103	1200/82	26.97
13MHP100-150	1" - 1 1/2"	1500/103	1200/82	53.90
13MHP200	2"	1000/69	800/55	67.41
13MHP250	2 1/2"	1000/69	800/55	80.91
13MHP300	3"	1000/69	800/55	94.41
13MHP400	4"	800/55	600/40	122.43
13MHP600	6"	300/20	200/13	170.05
13MHP800	8"	250/17	150/10	220.85
13MHP1000	10"	200/13	125/8.5	272.80
13MHP1200	12"	150/10	100/6	323.60

Telephone: **+44 (0)1772 323529** Email: **sales@dixoneurope.co.uk**

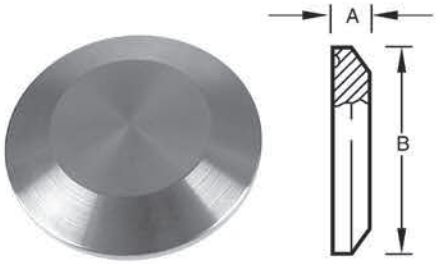

SOLID FERRULE BLANK DISC END CAPS – 16AMP

PART NO.	TUBE O.D.	DIMENSIONS	
		A	B
16AMP-R50-75	1/2" - 3/4"	4.75	25.20
16AMP-R100-150	1" - 1 1/2"	6.35	50.40
16AMP-R200	2"	6.35	63.91
16AMP-R250	2 1/2"	6.35	77.39
16AMP-R300	3"	6.35	90.91
16AMP-R400	4"	7.92	118.92
16AMP-R600	6"	11.10	166.88
16AMP-R800	8"	11.10	217.68
16AMP-R1000	10"	11.10	266.48
16AMP-R1200	12"	11.10	319.28

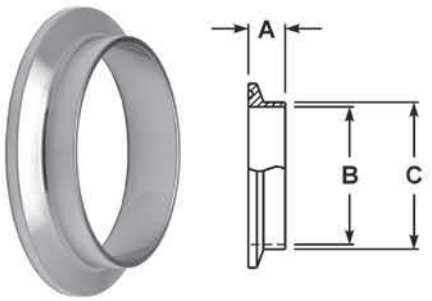

SHORT WELDING FERRULE

PART NO.	TUBE O.D.	DIMENSIONS		
		A	B	C
14WMP-R50	1/2"	12.70	9.40	12.70
14WMP-R75	3/4"	12.70	15.75	19.05
14WMP-R100	1"	12.70	22.10	25.40
14WMP-R150	1 1/2"	12.70	34.80	38.00
14WMP-R200	2"	12.70	47.50	50.80
14WMP-R250	2 1/2"	12.70	60.20	63.50
14WMP-R300	3"	12.70	72.90	76.20
14WMP-R400	4"	15.86	97.60	101.60
14WMP-R600	6"	22.23	146.86	152.40
14WMP-R800	8"	22.23	197.66	203.20
14WMP-R1000	10"	22.23	248.46	254.00
14WMP-R1200	12"	22.23	298.70	304.80

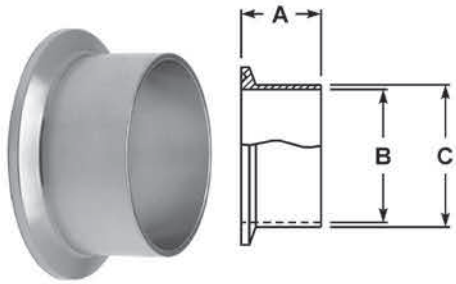

UK CLAMP FERRULES

PART NO.	TUBE O.D.	DIMENSIONS		
		A	B	C
S14AM7-R50	1/2"	21	9.40	12.70
S14AM7-R75	3/4"	21	15.75	19.05
S14AM7-R100	1"	21	22.10	25.40
S14AM7-R150	1 1/2"	21	34.80	38.00
S14AM7-R200	2"	21	47.50	50.80
S14AM7-R250	2 1/2"	21	60.20	63.50
S14AM7-R300	3"	21	72.90	76.20
S14AM7-R400	4"	21	97.60	101.60
S14AM7-R600	6"	21	146.86	152.40
S14AM7-R800	8"	21	197.66	203.20
S14AM7-R1000	10"	21	248.46	254.00
S14AM7-R1200	12"	21	298.70	304.80

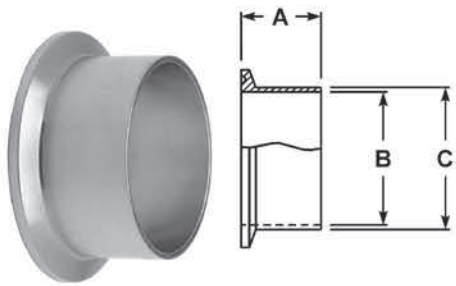

LONG BUTT WELD FERRULES

PART NO.	TUBE O.D.	DIMENSIONS		
		A	B	C
L14AM7-R50	1/2"	28.56	9.40	12.70
L14AM7-R75	3/4"	28.56	15.75	19.05
L14AM7-R100	1"	28.56	22.10	25.40
L14AM7-R150	1 1/2"	28.56	34.80	38.00
L14AM7-R200	2"	28.56	47.50	50.80
L14AM7-R250	2 1/2"	28.56	60.20	63.50
L14AM7-R300	3"	28.56	72.90	76.20
L14AM7-R400	4"	28.56	97.60	101.60
L14AM7-R600	6"	38.10	146.86	152.40
L14AM7-R800	8"	38.10	197.66	203.20
L14AM7-R1000	10"	44.45	248.46	254.00
L14AM7-R1200	12"	44.45	298.70	304.80



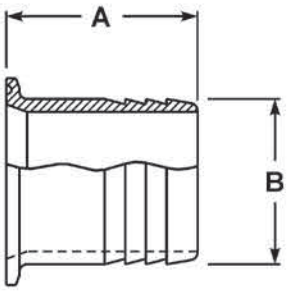

CLAMP HOSE TAIL

PART NO.	TUBE O.D.	DIMENSIONS	
		A	B
14MPHR-R50125	½" x 1/8"	31.75	3.18
14MPHR-R5025	½" x ¼"	38.10	6.35
14MPHR-R50375	½" x 3/8"	38.10	9.53
14MPHR-R50	½" x ½"	38.10	12.07
14MPHR-R5075	½" x ¾"	38.10	19.05
14MPHR-R75125	¾" x 1/8"	38.10	3.18
14MPHR-R7525	¾" x ¼"	38.10	6.35
14MPHR-R75375	¾" x 3/8"	38.10	9.53
14MPHR-R7550	¾" x ½"	38.10	12.07
14MPHR-R75	¾" x ¾"	38.10	19.05
14MPHR-R100	1" x 1"	42.88	25.4
14MPHR-R100375	1" x 3/8"	38.10	9.53
14MPHR-R10050	1" x ½"	38.10	12.7
14MPHR-R10075	1" x ¾"	42.88	19.05
14MPHR-R15025	1½" x ¼"	38.10	6.35
14MPHR-R150375	1½" x 3/8"	38.10	9.53
14MPHR-R15050	1½" x ½"	38.10	12.7
14MPHR-R150625	1½" x 5/8"	38.10	15.88
14MPHR-R15075	1½" x ¾"	38.10	19.05
14MPHR-R150100	1½" x 1"	42.88	25.4
14MPHR-R150125	1½" x 1¼"	42.88	31.75
14MPHR-R150	1½" x 1½"	42.88	38.1
14MPHR-R200	2" x 2"	58.72	50.8
14MPHR-R200150	2" x 1½"	58.72	38.1
14MPHR-R250	2½" x 2½"	58.72	63.5
14MPHR-R300	3" x 3"	78.59	76.2
14MPHR-R400	4" x 4"	86.51	101.6
14MPHR-R600	6" x 6"	86.51	152.4
14MPHR-R800	8" x 8"	86.51	203.2

Please note: All stems are manufactured to suit inch bore hoses (not metric hose bores).



Type 1 - Standard ½" - ¾" | Type 1 - Standard 1" and larger

BUNA-N BLACK -40°C TO 107°C

PART NO.	SIZE
42MP-U50	1/2"
42MP-U75	3/4"
40MP-U100	1"
40MP-U150	1 1/2"
40MP-U200	2"
40MP-U250	2 1/2"
40MP-U300	3"
40MP-U400	4"
40MP-U600	6"



Type 1 - Standard ½" - ¾" | Type 1 - Standard 1" and larger

VITON® BLACK –29°C TO 204°C

PART NO.	SIZE
42MP-SFY50	1/2"
42MP-SFY75	3/4"
40MP-SFY100	1"
40MP-SFY150	1 1/2"
40MP-SFY200	2"
40MP-SFY250	2 1/2"
40MP-SFY300	3"
40MP-SFY400	4"

Telephone: **+44 (0)1772 323529** Email: **sales@dixoneurope.co.uk**



Type 1 - Standard ½" - ¾"

Type 1 - Standard 1" and larger

BUNA-N WHITE -40°C TO 107°C	
PART NO.	**SIZE**
42MP-UW50	1/2"
42MP-UW75	3/4"
40MP-UW100	1"
40MP-UW150	1 1/2"
40MP-UW200	2"
40MP-UW250	2 1/2"
40MP-UW300	3"
40MP-UW400	4"



Type 1 - Standard ½" - ¾"

Type 1 - Standard 1" and larger

PTFE (SOLID) WHITE -73°C TO 204°C	
PART NO.	**SIZE**
42MP-G50	1/2"
42MP-G75	3/4"
40MP-G100	1"
40MP-G150	1 1/2"
40MP-G200	2"
40MP-G250	2 1/2"
40MP-G300	3"
40MP-G400	4"



Type 1 - Standard ½" - ¾"

Type 1 - Standard 1" and larger

EPDM BLACK –60°C TO 135°C	
PART NO.	**SIZE**
42MP-E50	1/2"
42MP-E75	3/4"
40MP-E100	1"
40MP-E150	1 1/2"
40MP-E200	2"
40MP-E250	2 1/2"
40MP-E300	3"
40MP-E400	4"

Also Available Type 2 as flanged gasket

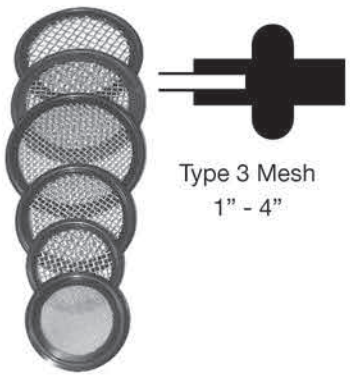

Type 3 Mesh 1" - 4"

- Colour code: one white dot, one yellow dot
- 10 mesh standard. Other mesh sizes available.
- Peroxide cured
- Meets 21CFR 177.2600
- Pharmaceutical class VI approved
- Please contact us for compatibility information
- Additional mesh sizes available, please contact us for details

EPDM - MESH SCREEN, 316	
PART NO.	**SIZE**
40MPS-E100	1"
40MPS-E150	1 1/2"
40MPS-E200	2"
40MPS-E250	2 1/2"
40MPS-E300	3"
40MPS-E400	4"

Please note: Mesh Screen Gaskets are also available in Silicone, Buna and Viton®. 10 Mesh standard.

Metal Detectable Clamp Gaskets

Metal detectable gaskets are impregnated with stainless steel particles. The addition of stainless steel allows a gasket or gasket pieces to be found with metal detection equipment.



Type 1 - Standard
½" - ¾"



Type 1 - Standard
1" and larger

Features:

- minimum temperature -29°C (-20°F)
- maximum temperature 100°C (212°F)
- good general use where temperature extremes do not exist

BUNA-N - METAL DETECTABLE CLAMP GASKETS

PART NO.	SIZE
40MP-UZ100	1"
40MP-UZ150	1½"
40MP-UZ200	2"
40MP-UZ250	2½"
40MP-UZ300	3"
40MP-UZ400	4"

Features:

- minimum temp -57°C (-70°F)
- maximum temp 154°C (310°F)
- resistant to steam, water and base solutions

EPDM - METAL DETECTABLE CLAMP GASKETS

PART NO.	SIZE
40MP-EZ100	1"
40MP-EZ150	1½"
40MP-EZ200	2"
40MP-EZ250	2½"
40MP-EZ300	3"
40MP-EZ400	4"

Features:

- minimum temp -29°C (-20°F)
- maximum temp 210°C (410°F)
- resistant to steam, heat and high acid solutions

FKM - METAL DETECTABLE CLAMP GASKETS

PART NO.	SIZE
40MP-SFYZ100	1"
40MP-SFYZ150	1½"
40MP-SFYZ200	2"
40MP-SFYZ250	2½"
40MP-SFYZ300	3"
40MP-SFYZ400	4"

Telephone: **+44 (0)1772 323529**

Email: **sales@dixoneurope.co.uk**

Clamp Flanged Gaskets



Type 2 - Flanged
1" and larger

- Colour code: red dot
- Meets 21CFR 177.2600
- Refer to the technical section for compatibility information
- Not recommended for use withbolted clamps

BUNA-N - BLACK, FLANGED	
PART NO.	SIZE
40MPF-U100	1"
40MPF-U150	1½"
40MPF-U200	2"
40MPF-U250	2½"
40MPF-U300	3"
40MPF-U400	4"
40MPF-U600	6"
40MPF-U800	8"
40MPF-U1000	10"
40MPF-U1200	12"



Type 2 - Flanged
1" and larger

- Colour code: red dot
- Meets 21CFR 177.2600
- Refer to the technical section for compatibility information
- Not recommended for use with bolted clamps

BUNA-N - WHITE, FLANGED	
PART NO.	SIZE
40MPF-UW100	1"
40MPF-UW150	1½"
40MPF-UW200	2"
40MPF-UW250	2½"
40MPF-UW300	3"
40MPF-UW400	4"
40MPF-UW600	6"
40MPF-UW800	8"



Type 2 - Flanged
1" and larger

- Colour code: three green dots
- Peroxide cured
- Meets 21CFR 177.2600
- Passed U.S.P. Class VI Cytotoxicity testing
- Refer to the technical section forcompatibility information
- Not recommended for use with bolted clamps

EPDM - FLANGED	
PART NO.	SIZE
40MPF-E100	1"
40MPF-E150	1½"
40MPF-E200	2"
40MPF-E250	2½"
40MPF-E300	3"
40MPF-E400	4"
40MPF-E600	6"
40MPF-E800	8"
40MPF-E1000	10"
40MPF-E1200	12"



Type 2 - Flanged
1" and larger

- Colour code: one white dot, one yellow dot
- Meets 21CFR 177.2600
- Passed U.S.P. Class VI Cytotoxicity testing
- Refer to the technical section for compatibility information
- Not recommended for use with bolted clamps

FKM (VITON®) - FLANGED	
PART NO.	**SIZE**
40MPF-SFY100	1"
40MPF-SFY150	1½"
40MPF-SFY200	2"
40MPF-SFY250	2½"
40MPF-SFY300	3"
40MPF-SFY400	4"
40MPF-SFY600	6"
40MPF-SFY800	8"
40MPF-SFY1000	10"
40MPF-SFY1200	12"



Type 2 - Flanged
1" and larger

- Colour code: pink dot
- Peroxide cured
- Meets 21CFR 177.2600
- Passed U.S.P. Class VI Cytotoxicity testing
- Refer to the technical section for compatibility information
- Not recommended for use with bolted clamps

SILICONE - WHITE, FLANGED	
PART NO.	**SIZE**
40MPF-XW100	1"
40MPF-XW150	1½"
40MPF-XW200	2"
40MPF-XW250	2½"
40MPF-XW300	3"
40MPF-XW400	4"
40MPF-XW600	6"
40MPF-XW800	8"
40MPF-XW1000	10"
40MPF-XW1200	12"



Type 2 - Flanged
1" and larger

- Colour code: no dot
- Platinum cured
- Meets 21CFR 177.2600
- Passed U.S.P. Class VI Cytotoxicity testing
- Refer to the technical section for compatibility information
- Not recommended for use with bolted clamps

SILICONE - CLEAR, FLANGED	
PART NO.	**SIZE**
40MPF-XC100	1"
40MPF-XC150	1½"
40MPF-XC200	2"
40MPF-XC250	2½"
40MPF-XC300	3"
40MPF-XC400	4"
40MPF-XC600	6"
40MPF-XC800	8"

Telephone: **+44 (0)1772 323529**

Email: **sales@dixoneurope.co.uk**

Clamp Envelope Gaskets

CAUTION

PTFE is a material subject to plastic flow. When cycled through heat and then cooled down in process lines, PTFE gaskets will not return to the original configuration and it will continue to compress as the cycling continues.

This plastic flow will allow leakage if clamp torques are not maintained.

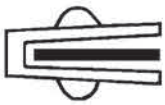

- Colour code: usually not marked
- Peroxide cured
- Meets 21CFR 177.1550
- Refer to the technical section for compatibility information

PTFE ENVELOPE WITH EPDM FILLER	
PART NO.	SIZE
42MP-GRE50	½"
42MP-GRE75	¾"
40MP-GRE100	1"
40MP-GRE150	1½"
40MP-GRE200	2"
40MP-GRE250	2½"
40MP-GRE300	3"
40MP-GRE400	4"

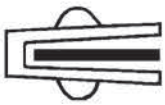

- Colour code: usually not marked
- Meets 21CFR 177.1550
- Refer to the technical section for compatibility information

PTFE ENVELOPE WITH FKM (VITON®) FILLER	
PART NO.	SIZE
42MP-GR50	½"
42MP-GR75	¾"
40MP-GR100	1"
40MP-GR150	1½"
40MP-GR200	2"
40MP-GR250	2½"
40MP-GR300	3"
40MP-GR400	4"
40MP-GR600	6"
40MP-GR800	8"

APC Clamp Gaskets



- Colour code: no dot
- Meets 21CFR 177.2600
- Refer to the technical section for compatibility information

BUNA APC - GREY	
PART NO.	SIZE
101-H100	1"
101-H150	1½"
101-H200	2"
101-H250	2½"
101-H300	3"
101-H400	4"



- Colour code: no dot
- Meets 21CFR 177.2600
- Refer to the technical section for compatibility information

BUNA APC - BLACK	
PART NO.	SIZE
101-HX100	1"
101-HX150	1½"
101-HX200	2"
101-HX250	2½"
101-HX300	3"
101-HX400	4"

Clamp Gasket Sizing Guide *(continued overleaf)*

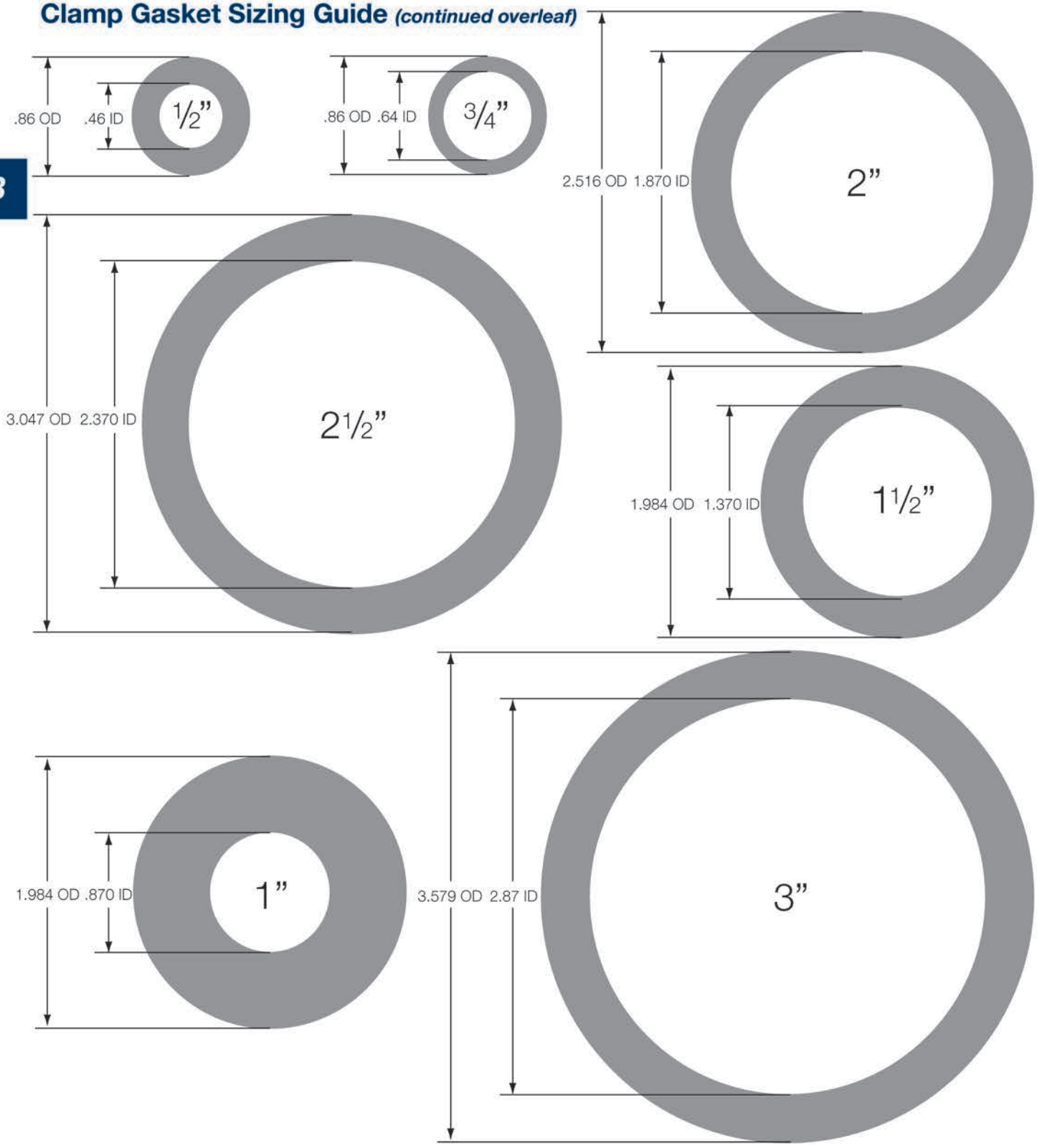

HYGIENIC SIZE	OD of CLAMP END	ID of FITTING	HYGIENIC SIZE	OD of CLAMP END	ID of FITTING
½”	0.992	0.370	3”	3.579	2.870
¾”	0.992	0.620	4”	4.682	3.834
1”	1.984	0.870	6”	6.562	5.782
1½”	1.984	1.370	8”	8.602	7.782
2”	2.516	1.870	10”	10.570	9.782
2½”	3.047	2.370	12”	12.570	11.760

Telephone: **+44 (0)1772 323529**

Email: **sales@dixoneurope.co.uk**

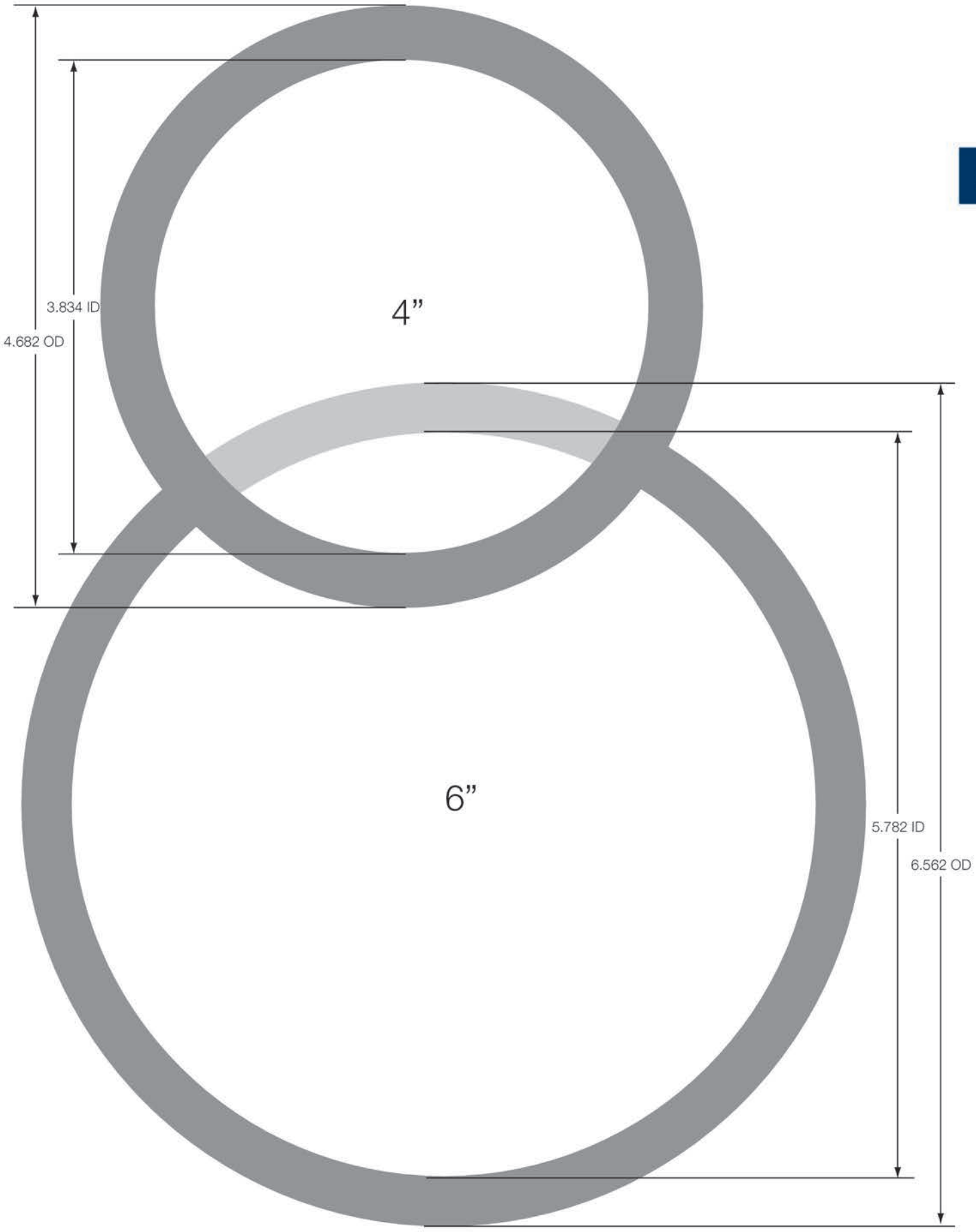
3.834 ID
4.682 OD
4”
6”
5.782 ID
6.562 OD

CLAMP 32676

Introduction

DIN32676 clamp unions are made to suit all same standard clamp fittings. Although similar in sizes to imperial 3A fittings sizes, they do differ on some and weld dimensions are metric tubing. All fittings are from 316L (1.4404) with an internal polish of 0.8Ra micron or better.



32676 SINGLE PIN HEAVY DUTY CLAMP – 13MHHM				
PART NO.	TUBE O.D.	SERVICE PRESSURE RATING (PSI/BAR) @ 70°F/21°C	SERVICE PRESSURE RATING (PSI/BAR) @ 250°F/121°C	DIMENSION A
13MHHM - DN10	DN10 - DN15 - DN20	500/34	300/20	27.2
13MHHM - DN100-150	DN25 - DN32 - DN40	500/34	300/20	53.9
13MHHM - DN200	DN50	450/31	250/17	67.5
13MHHM - DN65	DN65	400/27	200/13	95
13MHHM - DN80	DN80	350/24	175/12	110
13MHHM - DN100	DN100	300/20	150/10	122.43

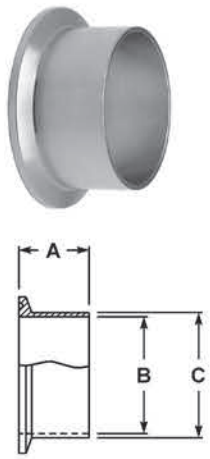

32676 CLAMP FERRULES				
PART NO.	TUBE O.D.	DIMENSION		
		A	B	C
14WMP-R0375DINM	DN10	21.5	12	9
14WMP-R050DINM	DN15	21.5	18	15
14WMP-R075DINM	DN20	21.5	22	19
14WMP-R100DINM	DN25	21.5	28	25
14WMP-R125DINM	DN32	21.5	34	31
14WMP-R150DINM	DN40	21.5	40	37
14WMP-R200DINM	DN50	21.5	52	49
14WMP-R250DINM	DN65	21.5	70	66
14WMP-R300DINM	DN80	21.5	85	81
1WMP-R400DINM	DN100	21.5	101.6	97.6



Type 1 - Standard
½" - ¾"



Type 1 - Standard
1" and larger

32676 EPDM BLACK –60°C TO 135°C	
PART NO.	SIZE
40MP-E375DINM	DN10
40MP-E050DINM	DN15
40MP-E075DINM	DN20
40MP-E100DINM	DN25
40MP-E125DINM	DN32
40MP-E150DINM	DN40
40MP-E200DINM	DN50
40MP-E250DINM	DN65
40MP-E300DINM	DN80
40MP-E400DINM	DN100

Also Available Type 2 as flanged gasket

Telephone: **+44 (0)1772 323529** Email: **sales@dixoneurope.co.uk**

Dixon Bevel Seat Fittings

A3 63-03 621

A Complete Bevel Seat Connection

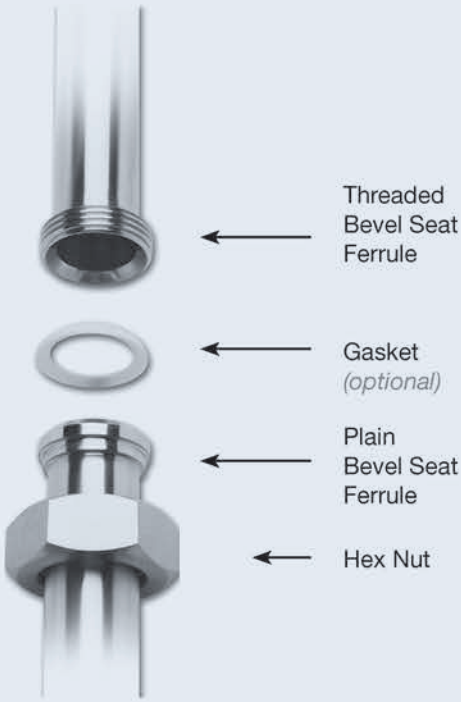

Product Specifications

Size range:
- 1" - 4" OD tube

Materials:
- G = 304 stainless steel
- R = 316L stainless steel
- other alloys are available

Finish:
- 3A sanitary finish ID and OD

Dimensions of stainless steel tube given in inches

Tube OD	Nominal Wall Thickness (inches)	Gage Number
1"	.065	16
1½"	.065	16
2"	.065	16
2½"	.065	16
3"	.065	16
4"	.083	14

Bevel Seat Nuts

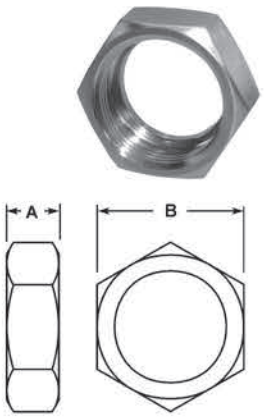

UNION HEX NUTS - 13H			
304 STAINLESS STEEL (CF8) PART NO.	TUBE O.D.	DIMENSION A	DIMENSION B
13H-G100	1"	.906	1.812
13H-G150	1½"	.968	2.406
13H-G200	2"	1.062	3.000
13H-G250	2½"	1.187	3.594
13H-G300	3"	1.281	4.188
13H-G400	4"	1.500	5.438

Feature:
- 400 PSI maximum

Bevel Seat Wrenches

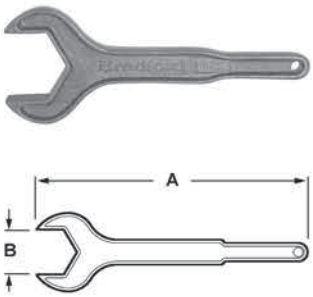

SINGLE SIDE HEX WRENCHES - 25H				
ALUMINUM PART NO.	TUBE O.D.	DIMENSION		WEIGHT LBS.
		A	B	
13H-G100	1"	10.500	1.812	.64
13H-G150	1½"	12.000	2.406	.86
13H-G200	2"	14.000	3.000	1.76
13H-G250	2½"	16.250	3.594	2.40
13H-G300	3"	18.500	4.188	3.04
13H-G400	4"	19.500	5.438	3.62

Bevel Seat Ferrules

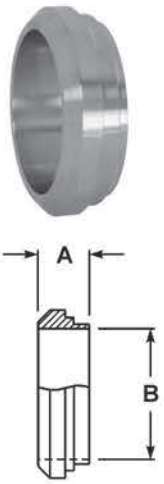

SHORT PLAIN BEVEL SEAT WELD FERRULES - 14PRF				
304 STAINLESS STEEL PART NO.	316L STAINLESS STEEL PART NO.	TUBE O.D.	DIMENSION	
			A	B
14PRF-G100	14PRF-R100	1"	.718	.870
14PRF-G150	14PRF-R150	1½"	.718	1.370
14PRF-G200	14PRF-R200	2"	.750	1.870
14PRF-G250	14PRF-R250	2½"	.875	2.370
14PRF-G300	14PRF-R300	3"	.906	2.870
14PRF-G400	14PRF-R400	4"	1.031	3.834

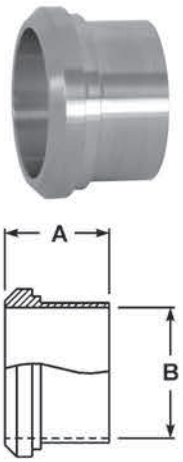

LONG PLAIN BEVEL SEAT WELD FERRULES - 14A				
304 STAINLESS STEEL PART NO.	316L STAINLESS STEEL PART NO.	TUBE O.D.	DIMENSION	
			A	B
14A-G100	14A-R100	1"	1.375	.870
14A-G150	14A-R150	1½"	1.500	1.370
14A-G200	14A-R200	2"	1.500	1.870
14A-G250	14A-R250	2½"	1.750	2.370
14A-G300	14A-R300	3"	1.750	2.870
14A-G400	14A-R400	4"	1.750	3.834

Telephone: **+44 (0)1772 323529** Email: **sales@dixoneurope.co.uk**

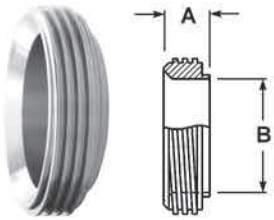

SHORT THREADED BEVEL SEAT WELD FERRULES - 15TRF				
304 STAINLESS STEEL PART NO.	316L STAINLESS STEEL PART NO.	TUBE O.D.	DIMENSION A	DIMENSION B
15TRF-G100	15TRF-R100	1"	.718	.870
15TRF-G150	15TRF-R150	1½"	.718	1.370
15TRF-G200	15TRF-R200	2"	.750	1.870
15TRF-G250	15TRF-R250	2½"	.875	2.370
15TRF-G300	15TRF-R300	3"	.906	2.870
15TRF-G400	15TRF-R400	4"	1.031	3.834

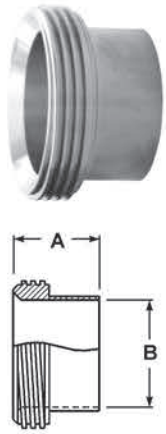

LONG THREADED BEVEL SEAT WELD FERRULES - 15A				
304 STAINLESS STEEL PART NO.	316L STAINLESS STEEL PART NO.	TUBE O.D.	DIMENSION A	DIMENSION B
15A-G100	15A-R100	1"	1.375	.870
15A-G150	15A-R150	1½"	1.500	1.370
15A-G200	15A-R200	2"	1.500	1.870
15A-G250	15A-R250	2½"	1.750	2.370
15A-G300	15A-R300	3"	1.750	2.870
15A-G400	15A-R400	4"	1.750	3.834

Bevel Seat End Caps



PLAIN BEVEL SEAT SOLID END CAPS - 16A			
304 STAINLESS STEEL PART NO.	316L STAINLESS STEEL PART NO.	TUBE O.D.	DIMENSION A
16A-G100	16A-R100	1"	1.312
16A-G150	16A-R150	1½"	1.843
16A-G200	16A-R200	2"	2.375
16A-G250	16A-R250	2½"	2.906
16A-G300	16A-R300	3"	3.437
16A-G400	16A-R400	4"	4.500

Other types of bevel seat adapters are available call Dixon for information


15AHR


21


22


14-18

Bevel Seat Gaskets



Features:
- color code: red dot
- meets 21CFR 177.2600

BUNA-N BEVEL SEAT GASKETS - BLACK	
PART NO.	SIZE
40BS-O100	1”
40BS-O150	1½”
40BS-O200	2”
40BS-O250	2½”
40BS-O300	3”
40BS-O400	4”



Features:
- color code: three green dots
- peroxide cured
- meets 21CFR 177.2600
- passed U.S.P. Class VI Cytotoxicity testing

EPDM BEVEL SEAT GASKETS - BLACK	
PART NO.	SIZE
40BS-O100	1”
40BS-O150	1½”
40BS-O200	2”
40BS-O250	2½”
40BS-O300	3”
40BS-O400	4”



Features:
- color code: one white dot and one yellow dot
- peroxide cured
- meets 21CFR 177.2600
- passed U.S.P. Class VI Cytotoxicity testing

FKM BEVEL SEAT GASKETS - BLACK	
PART NO.	SIZE
40BS-Y100	1”
40BS-Y150	1½”
40BS-Y200	2”
40BS-Y250	2½”
40BS-Y300	3”
40BS-Y400	4”



Features:
- color code: no dot
- peroxide cured
- meets 21CFR 177.2600
- passed U.S.P. Class VI Cytotoxicity testing

SILICONE BEVEL SEAT GASKETS - WHITE	
PART NO.	SIZE
40BS-X100	1”
40BS-X150	1½”
40BS-X200	2”
40BS-X250	2½”
40BS-X300	3”
40BS-X400	4”



Features:

- color code: no dot
- meets 21CFR 177.1550
- passed U.S.P. Class VI Cytotoxicity testing

PTFE BEVEL SEAT GASKETS - WHITE	
PART NO.	**SIZE**
40BS-S100	1"
40BS-S150	1½"
40BS-S200	2"
40BS-S250	2½"
40BS-S300	3"
40BS-S400	4"

CAUTION

PTFE is a material subject to plastic flow. When cycled through heat and then cooled down in process lines, PTFE gaskets will not return to the original configuration and it will continue to compress as the cycling continues. This plastic flow will allow leakage if clamp torques are not maintained.

High Pressure Quick Disconnect Fittings



Product Specifications

Size Range:
- 1/8" - 1 1/2"

Materials:
- brass
- 303 stainless steel
- 316 stainless steel
- steel

C

H-Series Hydraulic Couplings

Materials:

- Machined components are manufactured using solid steel, brass, 303 stainless steel or 316 stainless steel bar stock
- Stainless steel balls, retaining rings, and springs maximise corrosion resistance and extend service life.

Interchange Data:

- Interchangeable to ISO7241 Series 'B'
- Parker 60-Series, Snap-Tite 72-Series, Hansen HK-Series, Faster Series 'HNV' Aeroquip/Eaton FD45, Stucchi Series IRB/IRBO/IRBX.

Seal Components:

- Nitrile, FKM FDA FKM, PTFE and other materials available.
- 1/8" to 1" steel and stainless couplers have a PTFE anti-extrusion ring.
- 1/8" to 2-1/2" brass couplers have a redundant O-ring sealing system (dual O-rings/no PTFE back-up ring)
- 1-1/4" to 2-1/2" steel and stainless couplers have a redundant O-ring sealing system (dual O-rings/no PTFE back-up ring)
- Valve seals are crimped in place to maintain integrity during excessive flow conditions and pressurized connection.

RATED PRESSURE CHART H-SERIES ISO-B INTERCHANGE (CONNECTED)

BODY SIZE	STEEL COUPLER/PLUG				303 STAINLESS COUPLER/PLUG				316 STAINLESS COUPLER/PLUG			
	MAXIMUM WORKING		BURST		MAXIMUM WORKING		BURST		MAXIMUM WORKING		BURST	
	PSI	BAR	PSI	BAR	PSI	BAR	PSI	BAR	PSI	BAR	PSI	BAR
1/8"	4,000	275	14,500	1,000	3,500	240	29,500	2,000	3,500	240	29,500	2,000
1/4"	5,000	345	22,500	1,550	3,500	240	31,500	2,150	3,500	240	33,000	2,200
3/8"	4,000	275	16,500	1,150	3,500	240	26,500	1,800	3,500	240	28,000	1,900
1/2"	4,000	275	16,000	1,100	3,500	240	27,500	1,900	3,500	240	22,000	1,500
3/4"	4,000	275	16,500	1,150	2,000	138	15,000	1,000	2,000	138	15,000	1,000
1"	4,000	275	16,000	1,100	2,000	138	10,000	700	1,000	70	8,500	580
1 1/2"	2,500	170	12,500	850	1,500	100	8,500	580	1,000	70	7,000	480

Dixon Quick Release Couplings are not approved to any hygienic standard. It is the responsibility of the user to ensure the fittings are fit for purpose. Stainless Steel, VITON and PTFE are EDA approved materials.

Telephone: **+44 (0)1772 323529** Email: **sales@dixoneurope.co.uk**

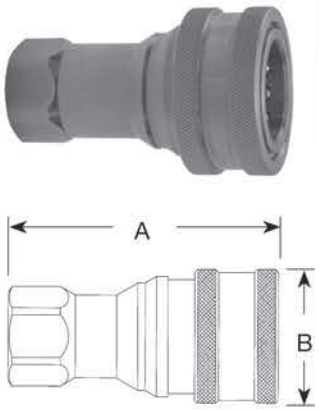

ISO-B SERIES - COUPLERS

BRASS PART NUMBER	303 STAINLESS STEEL PART NUMBER	316 STAINLESS STEEL PART NUMBER	SIZE	A	B
1HBF1	1HBF1-S	---	1/8"	48.3 mm	23.6 mm
2HBF2	2HBF2-S	2HBF2-SS	1/4"	57.4 mm	28.5 mm
3HBF3	3HBF3-S	3HBF3-SS	3/8"	63.8 mm	36.1 mm
4HBF4	4HBF4-S	4HBF4-SS	1/2"	72.6 mm	47.2 mm
6HBF6	6HBF6-S	6HBF6-SS	3/4"	90.2 mm	56.4 mm
8HBF8	8HBF8-S	8HBF8-SS	1"	104.9 mm	63.3 mm
10HBF10	10HBF10-S	10HBF10-SS	1-1/4"	114.3 mm	66.0 mm
12HBF12	12HBF12-S	12HBF12-SS	1-1/2"	122.2 mm	76.2 mm

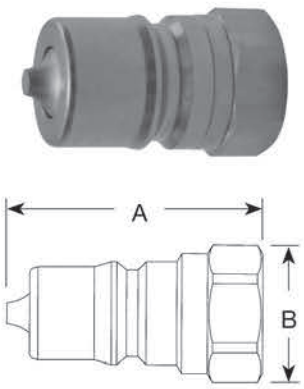

ISO-B SERIES - NIPPLES

BRASS PART NUMBER	303 STAINLESS STEEL PART NUMBER	316 STAINLESS STEEL PART NUMBER	SIZE	A	B
H1BF1	H1BF1-S	---	1/8"	32.5 mm	16.5 mm
H2BF2	H2BF2-S	H2BF2-SS	1/4"	39.4 mm	22.9 mm
H3BF3	H3BF3-S	H3BF3-SS	3/8"	43.2 mm	24.6 mm
H4BF4	H4BF4-S	H4BF4-SS	1/2"	49.3 mm	29.7 mm
H6BF6	H6BF6-S	H6BF6-SS	3/4"	61.2 mm	36.6 mm
H8BFB	H8BF8-S	H8BF8-SS	1"	72.9 mm	45.5 mm
H10BF10	H10BF10-S	H10BF10-SS	1-1/4"	108.0 mm	66.0 mm
H12BF12	H12BF12-S	H12BF12-SS	1-1/2"	120.9 mm	73.2 mm



ISO-B FOOD GRADE SERIES - COUPLERS

303 STAINLESS STEEL WITH NYLON BOOT PART NUMBER	303 STAINLESS STEEL WITH SILICONE BOOT PART NUMBER	316 STAINLESS STEEL WITH NYLON BOOT PART NUMBER	316 STAINLESS STEEL WITH SILICONE BOOT PART NUMBER	SIZE
D-4HF4-S-FNS	D-4HF4-S-FSB	D-4HF4-SS-FNS	D-4HF4-SS-FSB	1/2"



ISO-B FOOD GRADE SERIES - NIPPLES

STEEL PART NUMBER	303 STAINLESS STEEL PART NUMBER	316 STAINLESS STEEL PART NUMBER	SIZE
D-H4F4-SV-8	D-4HF4-S-FSB	D-H4F4-SS	1/2"

Dixon Quick Release Couplings are not approved to any hygienic standard. It is the responsibility of the user to ensure the fittings are fit for purpose. Stainless Steel, VITON and PTFE are EDA approved materials.

HT-Series Hydraulic Couplings

Materials:

- Machined components are manufactured using 316 stainless steel bar stock.
- Stainless steel balls, retaining rings, and springs maximise corrosion resistance and extend service life.

C

Interchange Data:

- Interchangeable to ISO16028
- Parker FEM-Series, Snap-Tite 74-Series, Hansen FF, Aeroquip/Eaton FD89, Stucchi FIRG/Series 'A', Faster FFN/FFI/2FFN/2FFI, Safeway FF49-Series

Seal Components:

- ¼" to ¾" nipples have moulded Polyurethane valve seals,with a temperature range of -54°C to +100°C (-65°F to +212°F).
- 1" nipples have Nitrile-Energized PTFE valve seals, with a temperature range of -40°C to +121°C (-40°F to +250°F).
- Nitrile and other seals are available.
- Couplers have a polyurethane valve stem O-Ring, with a temperature range of -54°C to +100°C (-65°F to +212°F).
- Ancillary coupler and nipple seals are Nitrile (Buna-N), temperature range of -40°C to +121°C (-40°F to +250°F).
- PTFE Anti-Extrusion ring protects main coupling valve seal from dynamic impulse pressure damage.

RATED PRESSURE CHART - HT-SERIES ISO16028 FLUSHFACE

BODY SIZE	STEEL COUPLER/PLUG COUPLED				316SS COUPLER/PLUG COUPLED				STEEL COUPLER UNCOUPLED				STEEL PLUG UNCOUPLED			
	MAX. WORKING		BURST		MAX. WORKING		BURST		MAX. WORKING		BURST		MAX. WORKING		BURST	
	PSI	BAR	PSI	BAR	PSI	BAR	PSI	BAR	PSI	BAR	PSI	BAR	PSI	BAR	PSI	BAR
1/4"	5000	345	20,000	1,379	-	-	-	-	5000	345	20,000	1379	5000	345	20,000	1,379
3/8"	5000	345	20,000	1,379	3500	241	17,500	1,207	5000	345	20,000	1379	5000	345	20,000	1,379
1/2"	5000	345	20,000	1,379	3400	234	17,000	1,172	5000	345	20,000	1379	5000	345	20,000	1,379
5/8"	5000	345	20,000	1,379	2920	201	14,600	1,007	5000	345	20,000	1379	5000	345	20,000	1,379
3/4"	5000	345	20,000	1,379	2920	201	14,600	1,007	5000	345	20,000	1379	5000	345	20,000	1,379
1"	5000	345	20,000	1,379	2920	201	14,600	1,007	5000	345	20,000	1379	5000	345	20,000	1,379
1 1/2"	3000	207	12,000	828	-	-	-	-	3000	207	12,000	828	3000	207	12,000	828
2"	3000	207	12,000	828	-	-	-	-	3000	207	12,000	828	3000	207	12,000	828

Dixon Quick Release Couplings are not approved to any hygienic standard. It is the responsibility of the user to ensure the fittings are fit for purpose. Stainless Steel, VITON and PTFE are EDA approved materials.

Telephone: **+44 (0)1772 323529** Email: **sales@dixoneurope.co.uk**

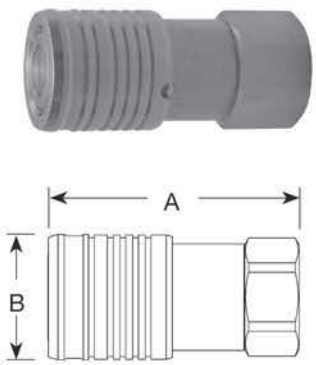

ISO FLUSHFACE SERIES - COUPLERS					
STEEL PART NUMBER	316 STAINLESS STEEL PART NUMBER	SIZE	NPTF	A	B
3HTBF3	3HTBF3-SS	3/8"	3/8"	63.3 mm	31.2 mm
3HTBF4	3HTBF4-SS	3/8"	1/2"	66.0 mm	31.2 mm
4HTBF4	4HTBF4-SS	1/2"	1/2"	82.0 mm	39.1 mm
4HTBF6	4HTBF6-SS	1/2"	3/4"	86.1 mm	39.1 mm
5HTBF6	5HTBF6-SS	5/8"	3/4"	89.9 mm	42.2 mm
6HTBF6	6HTBF6-SS	3/4"	3/4"	90.9 mm	47.0 mm
6HTBF8	6HTBF8-SS	3/4"	1"	90.9 mm	47.0 mm
8HTBF8	8HTBF8-SS	1"	1"	111.8 mm	58.2 mm
8HTBF10	8HTBF10-SS	1"	1-1/4"	111.8 mm	58.2 mm

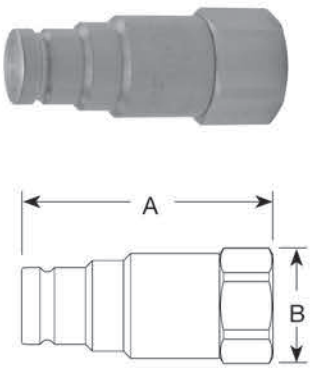

ISO FLUSHFACE SERIES - NIPPLES					
STEEL PART NUMBER	316 STAINLESS STEEL PART NUMBER	SIZE	NPTF	A	B
HT3F3	HT3BF3-SS	3/8"	3/8"	62.2 mm	31.2 mm
HT3F4	HT3BF4-SS	3/8"	1/2"	65.0 mm	31.2 mm
HT4F4	HT4BF4-SS	1/2"	1/2"	79.0 mm	38.6 mm
HT4F6	HT4BF6-SS	1/2"	3/4"	82.8 mm	38.6 mm
HT5F6	HT5BF6-SS	5/8"	3/4"	86.1 mm	42.2 mm
HT6F6	HT6TF6-SS	3/4"	3/4"	87.6 mm	47.0 mm
HT6F8	HT6TF8-SS	3/4"	1"	87.6 mm	47.0 mm
HT8F8	HT8TF8-SS	1"	1"	101.6 mm	58.2 mm
HT8F10	HT8TF10-SS	1"	1-1/4"	101.6 mm	60.0 mm

Dixon Quick Release Couplings are not approved to any hygienic standard. It is the responsibility of the user to ensure the fittings are fit for purpose. Stainless Steel, VITON and PTFE are EDA approved materials.

ST-Series Hydraulic Couplings

Materials:

- Machined components are manufactured using 316 stainless bar stock.
- Stainless steel balls, retaining rings, and springs maximise corrosion resistance and extend service life.

C

Interchange Data:

- Interchangeable to ISO16028
- Parker FEM-Series, Snap-Tite 74-Series, Hansen FF, Aeroquip/Eaton FD89, Stucchi FIRG/Series 'A', Faster FFN/FFI/2FFN/2FFI, Safeway FF49-Series

Seal Components:

- Nitrile (Buna-N) seals are standard, providing a temperature range of -40°C to +121°C (-40°F to +250°F).
- All couplers and nipples incorporate PTFE anti-extrusion rings to protect the seal components from dynamic impulse damage.
- Other seal materials are available.

316 STAINLESS COUPLER / PLUG COUPLED				
BODY SIZE	MAXIMUM WORKING		BURST	
	PSI	BAR	PSI	BAR
1/4"	5,000	345	28,000	1,900
3/8"	5,000	345	28,000	1,900
1/2"	5,000	345	25,000	1,700
3/4"	5,000	345	22,800	1,550
1"	4,000	275	18,500	1,250
2"	3,000	200	10,000	700

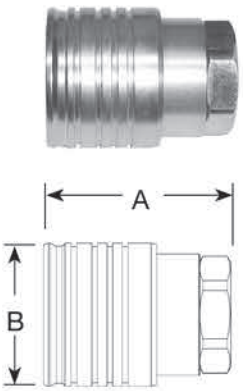

SNAP-TITE '71' INTERCHANGE ST SERIES - COUPLERS				
316 STAINLESS STEEL PART NUMBER	SIZE	NPTF	A	B
2STBF2-SS	1/4"	1/4"	49.8 mm	31.2 mm
3STBF3-SS	3/8"	3/8"	59.9 mm	40.6 mm
3STBF4-SS	3/8"	1/2"	59.9 mm	40.6 mm
4STBF4-SS	1/2"	1/2"	70.4 mm	50.3 mm
6STBF6-SS	3/4"	3/4"	77.0 mm	59.7 mm
8STBF8-SS	1"	1"	84.6 mm	69.3 mm
8STBF10-SS	1"	1-1/4"	93.2 mm	69.3 mm

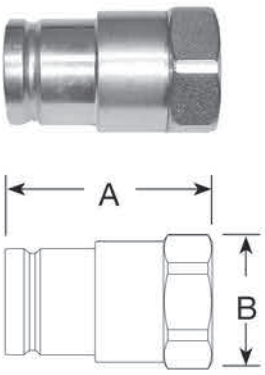

SNAP-TITE '71' INTERCHANGE ST SERIES - NIPPLES				
316 STAINLESS STEEL PART NUMBER	SIZE	NPTF	A	B
ST2BF2-SS	1/4"	1/4"	46.7 mm	22.9 mm
ST3BF3-SS	3/8"	3/8"	58.9 mm	37.6 mm
ST3BF4-SS	3/8"	1/2"	58.9 mm	37.6 mm
ST4BF4-SS	1/2"	1/2"	60.2 mm	41.9 mm
ST6BF6-SS	3/4"	3/4"	75.2 mm	48.8 mm
ST8BF8-SS	1"	1"	81.8 mm	53.3 mm
ST8BF10-SS	1"	1-1/4"	88.4 mm	55.9 mm

Dixon Quick Release Couplings are not approved to any hygienic standard. It is the responsibility of the user to ensure the fittings are fit for purpose. Stainless Steel, VITON and PTFE are EDA approved materials.

Telephone: **+44 (0)1772 323529** Email: **sales@dixoneurope.co.uk**

Polished Bends, Tee's & Reducers

High Quality Hygienic Weld Fittings - 3A Standard

All Dixon polished fittings have a surface finish equitant to 150 grit or better OD, and 180 grit or better ID. A maximum of Ra 32 microinch (0.8 micron) is indicated.

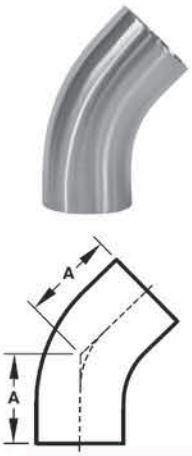

45° POLISHED ELBOWS - BUTT WELD B2KS			
PART NO.	TUBE O.D.	DIMENSION A	NOMINAL WALL
B2KS-R50P	½"	2.250	0.065
B2KS-R75P	¾"	2.250	0.065
B2KS-R100P	1"	1.188	0.065
B2KS-R150P	1½"	1.625	0.065
B2KS-R200P	2"	2.312	0.065
B2KS-R250P	2½"	3.000	0.065
B2KS-R300P	3"	3.688	0.065
B2KS-R400P	4"	4.812	0.083

Polished 316L Stainless Steel.



POLISHED ELBOWS LESS TANGENT – B2WK				
PART NO.	TUBE O.D.	DIMENSION		NOMINAL WALL
		A	R	
B2WK-R50P	½"	.466	1.125	0.065
B2WK-R75P	¾"	.466	1.125	0.065
B2WK-R100P	1"	.625	1.500	0.065
B2WK-R150P	1½"	.937	2.250	0.065
B2WK-R200P	2"	1.250	3.000	0.065
B2WK-R250P	2½"	1.562	3.750	0.065
B2WK-R300P	3"	1.875	4.500	0.065
B2WK-R400P	4"	2.500	6.000	0.083
B2WK-R600P	6"	3.750	9.000	0.109
B2WK-R800P	8"	5.000	12.000	0.120
B2WK-R1000P	10"	6.250	15.000	0.109
B2WK-R1200P	12"	7.500	18.000	0.120

Polished 316L Stainless Steel.

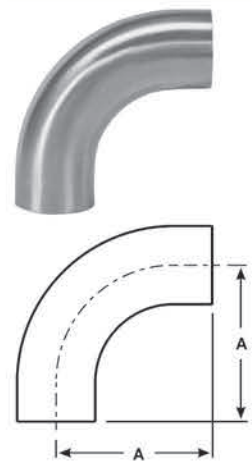

90° POLISHED ELBOWS – BUTT WELD ELBOWS WITH TANGENT – B2S			
PART NO.	TUBE O.D.	DIMENSION A	NOMINAL WALL
B2S-R50P	½"	3.000	0.065
B2S-R75P	¾"	3.000	0.065
B2S-R100P	1"	2.062	0.065
B2S-R150P	1½"	2.937	0.065
B2S-R200P	2"	4.062	0.065
B2S-R250P	2½"	5.187	0.065
B2S-R300P	3"	6.312	0.065
B2S-R400P	4"	8.312	0.083

Polished 316L Stainless Steel.



HOLEDALL® WELD END EXTERNAL CRIMP STEM

PART NO.	SIZE
HA0833	1"
HA0835	1½"
HA0837	2"
HA0839	2½"
HA0841	3"
HA0843	4"

Please note: All stems are manufactured to suit inch bore hoses (not metric hose bores).
1/2" & 3/4" available on request.

D



90° POLISHED ELBOWS – BUTT WELD ELBOWS LESS TANGENT – B2WCL

PART NO.	TUBE O.D.	DIMENSION A	NOMINAL WALL
B2WCL-R50P	½"	1.125	0.065
B2WCL-R75P	¾"	1.125	0.065
B2WCL-R100P	1"	1.500	0.065
B2WCL-R150P	1½"	2.250	0.065
B2WCL-R200P	1½"	3.000	0.065
B2WCL-R250P	2½"	3.750	0.065
B2WCL-R300P	3"	4.500	0.065
B2WCL-R400P	4"	6.000	0.083
B2WCL-R600P	6"	9.000	0.109
B2WCL-R800P	8"	12.000	0.120
B2WCL-R1000P	10"	15.000	0.109

Polished 316L Stainless Steel.

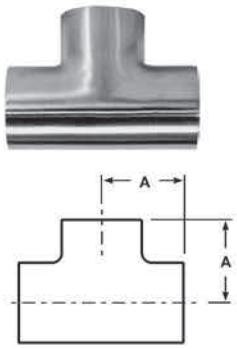

POLISHED TEES – BUTT WELD / SHORT TEE-B7WWW

PART NO.	TUBE O.D.	DIMENSION A	NOMINAL WALL
B7WWW-R100P	1"	1.125	0.065
B7WWW-R150P	1½"	1.656	0.065
B7WWW-R200P	2"	2.062	0.065
B7WWW-R250P	2½"	2.344	0.065
B7WWW-R300P	3"	2.594	0.065
B7WWW-R400P	4"	3.438	0.083

Polished 316L Stainless Steel.

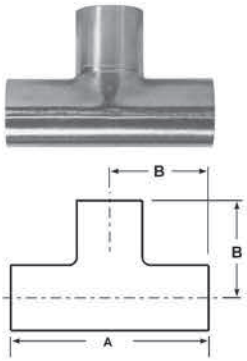

POLISHED TEES – BUTT WELD / LONG TEE – B7W

PART NO.	TUBE O.D.	DIMENSION A	DIMENSION B	NOMINAL WALL
B7W-R50P	½"	3.750	1.875	0.065
B7W-R75P	¾"	4.000	2.000	0.065
B7W-R100P	1"	3.750	1.875	0.065
B7W-R150P	1½"	4.500	2.250	0.065
B7W-R200P	2"	6.000	3.000	0.065
B7W-R250P	2½"	6.000	3.000	0.065
B7W-R300P	3"	6.500	3.250	0.065
B7W-R400P	4"	7.750	3.875	0.083
B7W-R800P	8"	14.000	7.000	0.120

Polished 316L Stainless Steel.



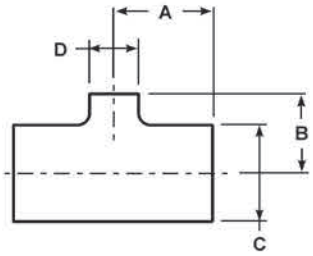

POLISHED TEES – BUTT WELD / REDUCING TEE – B7RWWW

PART NO.	TUBE O.D.	DIMENSION				NOMINAL WALL
		A	B	C	D	
B7RWWW-R7550P	¾" x ½"	2.000	2.000	0.7500	0.500	0.065
B7RWWW-R10050P	1" x ½"	2.125	2.125	1.000	0.500	0.065
B7RWWW-R10075P	1" x ¾"	2.125	2.125	1.000	0.750	0.065
B7RWWW-R15050P	1½" x ½"	2.375	2.375	1.500	0.500	0.065
B7RWWW-R15075P	1½" x ¾"	2.375	2.375	1.500	0.750	0.065
B7RWWW-R150100P	1½" x 1"	1.656	1.656	1.500	1.000	0.065
B7RWWW-R20050P	2" x ½"	2.875	2.875	2.000	1.500	0.065
B7RWWW-R20075P	2" x ¾"	2.875	2.875	2.000	1.500	0.065
B7RWWW-R200100P	2" x 1"	2.062	2.062	2.000	2.000	0.065
B7RWWW-R200150P	2" x 1½"	2.062	2.062	2.000	1.500	0.065
B7RWWW-R250150P	2½" x 1½"	2.344	2.344	2.500	2.000	0.065
B7RWWW-R250200P	2½" x 2"	2.344	2.344	2.500	2.500	0.065
B7RWWW-R300150P	3" x 1½"	2.594	2.594	3.000	1.500	0.065
B7RWWW-R300200P	3" x 2"	2.594	2.594	3.000	2.000	0.065
B7RWWW-R300250P	3" x 2½"	2.594	2.594	3.000	2.500	0.083
B7RWWW-R400150P	4" x 1½"	3.438	3.438	4.000	3.000	0.083
B7RWWW-R400200P	4" x 2"	3.438	3.438	4.000	2.000	0.083
B7RWWW-R400250P	4" x 2½"	3.438	3.438	4.000	3.000	0.083
B7RWWW-R400300P	4" x 3"	3.438	3.438	4.000	4.000	0.083
B7RWWW-R600200P	6" x 2"	5.625	5.625	6.000	-	0.109
B7RWWW-R600300P	6" x 3"	5.625	5.625	6.000	-	0.109
B7RWWW-R600400P	6" x 4"	5.625	5.625	6.000	-	0.109

Polished 316L Stainless Steel.



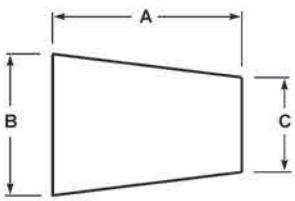

POLISHED REDUCERS – BUTT WELD CONCENTRIC REDUCER – B31W

PART NO.	TUBE O.D.	DIMENSION			NOMINAL WALL
		A	B	C	
B31W-R7550P	¾" x ½"	1.000	0.750	0.500	0.065
B31W-R10050P	1" x ½"	2.000	1.000	0.500	0.065
B31W-R10075P	1" x ¾"	1.000	1.000	0.750	0.065
B31W-R15050P	1½" x ½"	4.000	1.500	0.500	0.065
B31W-R15075P	1½" x ¾"	3.000	1.500	0.750	0.065
B31W-R150100P	1½" x 1"	2.000	1.500	1.000	0.065
B31W-R20050P	2" x ½"	6.000	2.000	0.500	0.065
B31W-R20075P	2" x ¾"	5.000	2.000	0.750	0.065
B31W-R200100P	2" x 1"	4.000	2.000	1.000	0.065
B31W-R200150P	2" x 1½"	2.000	2.000	1.500	0.065
B31W-R250150P	2½" x 1½"	4.000	2.500	1.500	0.065
B31W-R250200P	2½" x 2"	2.000	2.500	2.000	0.065
B31W-R300100P	3" x 1"	8.000	3.000	1.000	0.065
B31W-R300150P	3" x 1½"	6.000	3.000	1.500	0.065
B31W-R300200P	3" x 2"	4.000	3.000	2.000	0.065
B31W-R300250P	3" x 2½"	2.000	3.000	2.500	0.065
B31W-R400150P	4" x 1½"	10.000	4.000	1.500	0.083
B31W-R400200P	4" x 2"	8.000	4.000	2.000	0.083
B31W-R400250P	4" x 2½"	6.000	4.000	2.500	0.083
B31W-R400300P	4" x 3"	4.000	4.000	3.000	0.083
B31W-R600200P	6" x 2"	5.500	6.000	2.000	0.109
B31W-R800400P	8" x 4"	6.000	8.000	4.000	0.120
B31W-R800600P	8" x 6"	6.000	8.000	6.000	0.120

Polished 316L Stainless Steel.



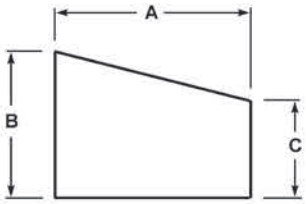

POLISHED REDUCERS – BUTT WELD ECCENTRIC REDUCER – B32W

PART NO.	TUBE O.D.	DIMENSION			NOMINAL WALL
		A	B	C	
B32W-R7550P	¾" x ½"	1.000	0.750	0.500	0.065
B32W-R10050P	1" x ½"	2.000	1.000	0.500	0.065
B32W-R10075P	1" x ¾"	1.000	1.000	0.750	0.065
B32W-R15050P	1½" x ½"	4.000	1.500	0.500	0.065
B32W-R15075P	1½" x ¾"	3.000	1.500	0.750	0.065
B32W-R150100P	1½" x 1"	2.000	1.500	1.000	0.065
B32W-R20050P	2" x ½"	6.000	2.000	0.500	0.065
B32W-R20075P	2" x ¾"	5.000	2.000	0.750	0.065
B32W-R200100P	2" x 1"	4.000	2.000	1.000	0.065
B32W-R200150P	2" x 1½"	2.000	2.000	1.500	0.065
B32W-R250150P	2½" x 1½"	4.000	2.500	1.500	0.065
B32W-R250200P	2½" x 2"	2.000	2.500	2.000	0.065
B32W-R300150P	3" x 1½"	6.000	3.000	1.500	0.065
B32W-R300200P	3" x 2"	4.000	3.000	2.000	0.065
B32W-R300250P	3" x 2½"	2.000	3.000	2.500	0.065
B32W-R400150P	4" x 1½"	10.000	4.000	1.500	0.083
B32W-R400200P	4" x 2"	8.000	4.000	2.000	0.083
B32W-R400250P	4" x 2½"	6.000	4.000	2.500	0.083
B32W-R400300P	4" x 3"	4.000	4.000	3.000	0.083

Polished 316L Stainless Steel.



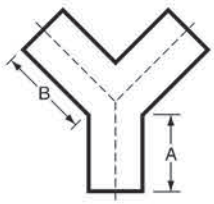

POLISHED TRUE (EQUAL) BUTT WELD "Y"

PART NO.	TUBE O.D.	DIMENSION		NOMINAL WALL
		A	B	
B28W-R100P	1"	2.000	2.438	0.065
B28W-R150P	1½"	2.000	2.438	0.065
B28W-R200P	2"	2.625	3.250	0.065
B28W-R250P	2½"	3.370	4.125	0.065
B28W-R300P	3"	4.000	4.875	0.065
B28W-R400P	4"	5.375	5.375	0.083

Polished 316L Stainless Steel.



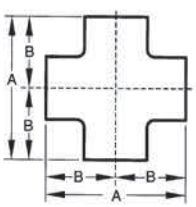

POLISHED (EQUAL) BUTT WELD "X"

PART NO.	TUBE O.D.	DIMENSION		NOMINAL WALL
		A	B	
B9WWWW-R100P	1"	2.250	1.125	0.065
B9WWWW-R150P	1½"	3.312	1.656	0.065
B9WWWW-R200P	2"	4.125	2.062	0.065
B9WWWW-R250P	2½"	4.687	2.343	0.065
B9WWWW-R300P	3"	5.187	2.593	0.065
B9WWWW-R400P	4"	6.875	3.437	0.083

Polished 316L Stainless Steel.

Telephone: **+44 (0)1772 323529** Email: **sales@dixoneurope.co.uk**

UK Dairy Standard Fittings. Polished OD, bright anealed or tumbled ID

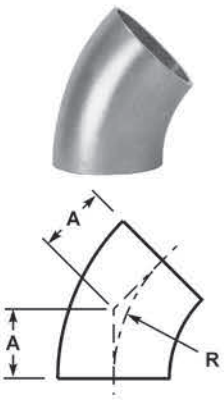

UK DAIRY ELBOWS LESS TANGENT – B2WK

PART NO.	TUBE O.D.	DIMENSION A	DIMENSION R	NOMINAL WALL
B2WK-R1005	1"	15.8	38.1	1.6
B2WK-R1505	1½"	23.7	57.2	1.6
B2WK-R2005	2"	31.6	76.2	1.6
B2WK-R2505	2½"	39.5	95.5	1.6
B2WK-R3005	3"	47.3	114.3	1.6
B2WK-R4005	4"	63.1	152.4	2

OD polished only 316 stainless steel

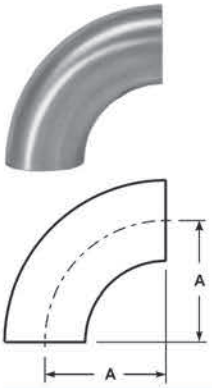

90° UK DAIRY ELBOWS – BUTT WELD ELBOWS LESS TANGENT – B2WCL

PART NO.	TUBE O.D.	DIMENSION A	NOMINAL WALL
B2WCL-R505	½"	19.1	1.6
B2WCL-R755	¾"	28.6	1.6
B2WCL-R1005	1"	38.1	1.6
B2WCL-R1505	1½"	57.2	1.6
B2WCL-R2005	2"	76.2	1.6
B2WCL-R2505	2½"	95.3	1.6
B2WCL-R3005	3"	114.3	1.6
B2WCL-R4005	4"	152.4	2

OD polished only 316 stainless steel

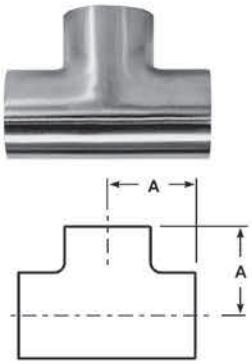

UK DAIRY TEES – BUTT WELD / SHORT TEE-B7WWW

PART NO.	TUBE O.D.	DIMENSION A	NOMINAL WALL
B7WWW-R505	½"	19.1	1.6
B7WWW-R755	¾"	28.6	1.6
B7WWW-R1005	1"	44	1.6
B7WWW-R1505	1½"	64	1.6
B7WWW-R2005	2"	89	1.6
B7WWW-R2505	2½"	114	1.6
B7WWW-R3005	3"	134	1.6
B7WWW-R4005	4"	195	2

OD polished only 316 stainless steel

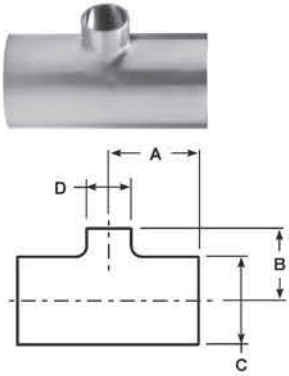

UK DAIRY TEES – BUTT WELD / REDUCING TEE – B7RWWW

PART NO.	TUBE O.D.	DIMENSION A	DIMENSION B	DIMENSION C	DIMENSION D	NOMINAL WALL
B7RWWW-R100505	1" x ½"	50	27	25.4	12.7	1.6
B7RWWW-R1501005	1½" x 1"	75	21.6	38.1	25.4	1.6
B7RWWW-R150505	1½" x ½"	75	27	30.1	12.7	1.6
B7RWWW-R2001005	2" x 1"	89	28.9	50.8	25.4	1.6
B7RWWW-R2502005	2½" x 2"	95	35	63.5	50.8	1.6
B7RWWW-R4002005	4" x 2"	127	107	101.6	50.8	2

OD polished only 316 stainless steel

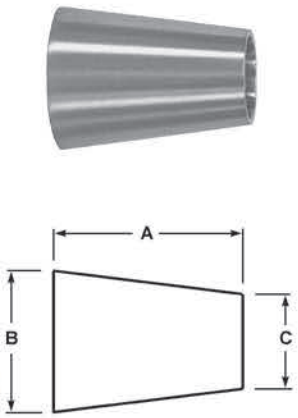

UK DAIRY REDUCERS – BUTT WELD CONCENTRIC REDUCER – B31W

PART NO.	TUBE O.D.	DIMENSION			NOMINAL WALL
		A	B	C	
B31W-R75505	¾" x ½"	19.1	19.1	12.7	1.6
B31W-R100505	1" x ½"	19.1	25.4	12.7	1.6
B31W-R100755	1" x ¾"	16	25.4	19.1	1.6
B31W-R150755	1½" x ¾"	31	38.1	19.1	1.6
B31W-R1501005	1½" x 1"	28	38.1	25.4	1.6
B31W-R2001505	2" x 1½"	31	50.8	38.1	1.6
B31W-R2001005	2" x 1"	49	50.8	25.4	1.6
B31W-R2502005	2½" x 2"	41	63.5	50.8	1.6
B31W-R2501505	2½" x 1½"	48	63.5	38.1	1.6
B31W-R2501005	2½" x 1"	76	63.5	25.4	1.6
B31W-R3002505	3" x 2½"	40	76.1	63.5	1.6
B31W-R3002005	3" x 2"	50	76.1	50.8	1.6
B31W-R3001505	3" x 1½"	74	76.1	38.1	1.6
B31W-R4003005	4" x 3"	51	101.6	76.1	2
B31W-R4002005	4" x 2"	100	101.6	50.8	2

OD polished only 316 stainless steel

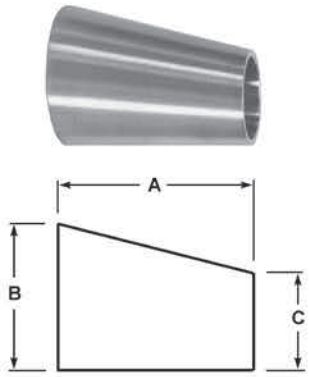

UK DAIRY REDUCERS – BUTT WELD ECCENTRIC REDUCER – B32W

PART NO.	TUBE O.D.	DIMENSION			NOMINAL WALL
		A	B	C	
B32W-R1501005	1½" x 1"	29	38.1	25.4	1.6
B32W-R2001005	2" x 1"	48	50.8	25.4	1.6
B32W-R2502005	2½" x 2"	44	63.5	50.8	1.6
B32W-R3002005	3" x 2"	46	76.1	50.8	1.6
B32W-R4002005	4" x 2"	91	101.6	50.8	2

OD polished only 316 stainless steel

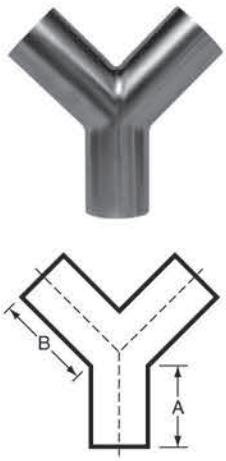

UK DAIRY (EQUAL) BUTT WELD "Y"

PART NO.	TUBE O.D.	DIMENSION		NOMINAL WALL
		A	B	
B28W-R1005	1"	76.2	76.2	1.6
B28W-R1505	1½"	76.2	76.2	1.6
B28W-R2005	2"	101.6	101.6	1.6
B28W-R2505	2½"	127	127	1.6
B28W-R3005	3"	152.4	152.4	1.6
B28W-R4005	4"	203.2	203.2	2

OD polished only 316 stainless steel

Telephone: **+44 (0)1772 323529** Email: **sales@dixoneurope.co.uk**

DIN 11852 Metric Weld Fittings. Polished OD, bright anealed or tumbled ID

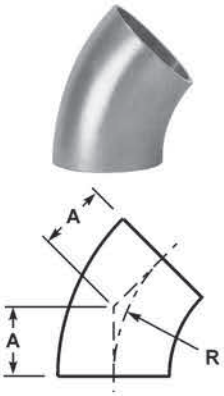

DIN 11852 ELBOWS LESS TANGENT – B2WK

PART NO.	SIZE	DIMENSION		NOMINAL WALL	TUBE OD
		A	R		
B2WK-R100PDIN	DN25	60.7	50.0	1.5	29
B2WK-R150PDIN	DN40	64.9	60.0	1.5	41
B2WK-R200PDIN	DN50	69.0	70.0	1.5	53
B2WK-R250PDIN	DN65	73.0	80.0	2.0	70
B2WK-R300PDIN	DN80	92.3	90.0	2.0	85
B2WK-R400PDIN	DN100	96.4	100.0	2	104

OD polished only 316 stainless steel

D

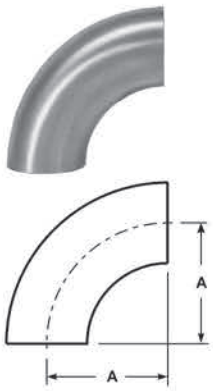

90° DIN 11852 ELBOWS – BUTT WELD ELBOWS LESS TANGENT – B2S

PART NO.	SIZE	DIMENSION A	NOMINAL WALL	TUBE OD
B2S-R50PDIN	DN15	35.0	1.5	19
B2S-R75PDIN	DN20	40.0	1.5	23
B2S-R100PDIN	DN25	50.0	1.5	29
B2S-R150PDIN	DN40	60.0	1.5	41
B2S-R200PDIN	DN50	70.0	1.5	53
B2S-R250PDIN	DN65	80.0	2.0	70
B2S-R300PDIN	DN80	90.0	2.0	85
B2S-R400PDIN	DN100	100.0	2	104

OD polished only 316 stainless steel

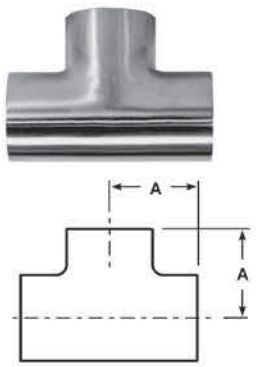

DIN 11852 TEES – BUTT WELD / SHORT TEE-B7WWW

PART NO.	SIZE	DIMENSION A	NOMINAL WALL	TUBE OD
7WWW-R50PDIN	DN15	35.0	1.5	19
B7WWW-R75PDIN	DN20	40.0	1.5	23
B7WWW-R100PDIN	DN25	50	1.5	29
B7WWW-R150PDIN	DN40	60	1.5	41
B7WWW-R200PDIN	DN50	70	1.5	53
B7WWW-R250PDIN	DN65	80	2.0	70
B7WWW-R300PDIN	DN80	90	2.0	85
B7WWW-R400PDIN	DN100	100	2	104

OD polished only 316 stainless steel

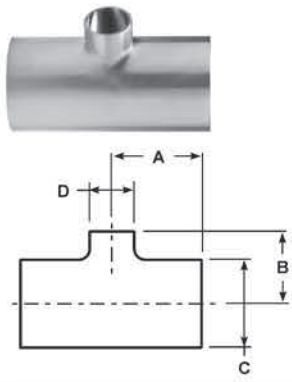

DIN 11852 TEES – BUTT WELD / REDUCING TEE – B7RWWW

PART NO.	SIZE	DIMENSION				NOMINAL WALL	TUBE OD
		A	B	C	D		
B7RWWW-R10050PDIN	DN25 x 15	50	50	29	19.0	1.5	29
B7RWWW-R150100PDIN	DN40 x 25	60	60	41	29.0	1.5	41
B7RWWW-R15050PDIN	DN40 x 15	60	60	41	19.0	1.5	53
B7RWWW-R200100PDIN	DN50 x 40	70	70	53	29.0	1.5	70
B7RWWW-R250200PDIN	DN65 x 50	80	80	70	53.0	2	85
B7RWWW-R400200PDIN	DN100 x 50	100	100	104	53.0	2	104

OD polished only 316 stainless steel

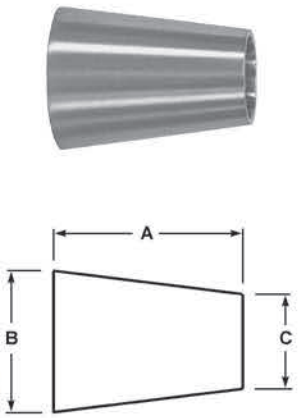

DIN 11852 REDUCERS – BUTT WELD CONCENTRIC REDUCER – B31W

PART NO.	SIZE	DIMENSION			NOMINAL WALL
		A	B	C	
B31W-R7550PDIN	DN20 x 15	7	23	19	1.5
B31W-R10050PDIN	DN25 x 15	18	29	19.0	1.5
B31W-R10075PDIN	DN25 x 20	11	29	23	1.5
B31W-R15075PDIN	DN40 x 20	33	41	23.0	1.5
B31W-R150100PDIN	DN40 x 25	22	41	29	1.5
B31W-R200150PDIN	DN50 x 40	22	53	41	1.5
B31W-R200100PDIN	DN50 x 25	44	53	29	1.5
B31W-R250200PDIN	DN65 x 50	29	70	53	2
B31W-R250150PDIN	DN65 x 40	51	70	41	2
B31W-R250100PDIN	DN65 x 25	29	70	29	2
B31W-R300250PDIN	DN80 x 65	27	85	70	2
B31W-R300200PDIN	DN80 x 50	56	85	53	2
B31W-R300150PDIN	DN80 x 40	78	85	41	2
B31W-R400300PDIN	DN100 x 80	34	104	85	2
B31W-R400200PDIN	DN100 x 50	90	104	53	2

OD polished only 316 stainless steel

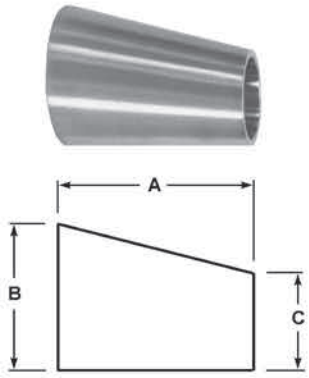

DIN 11852 REDUCERS – BUTT WELD ECCENTRIC REDUCER – B32W

PART NO.	SIZE	DIMENSION			NOMINAL WALL
		A	B	C	
B32W-R150100PDIN	DN40 x 25	33	41	29	1.5
B32W-R200100PDIN	DN50 x 25	66	53	29	1.5
B32W-R250200PDIN	DN65 x 50	44	70	53	2
B32W-R300200PDIN	DN80 x 50	85	85	53	2
B32W-R400200PDIN	DN100 x 50	137.5	104	53	2

OD polished only 316 stainless steel

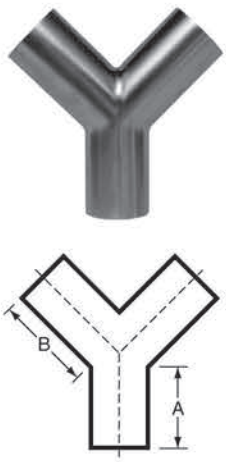

DIN 11852 (EQUAL) BUTT WELD "Y"

PART NO.	SIZE	DIMENSION		NOMINAL WALL
		A	B	
B28W-R100PDIN	DN25	22	44	1.5
B28W-R150PDIN	DN40	31	64	1.5
B28W-R200PDIN	DN50	44	89	1.5
B28W-R250PDIN	DN65	58	114	2
B28W-R300PDIN	DN80	67	134	2.0
B28W-R400PDIN	DN100	85	174	2.0

OD polished only 316 stainless steel

Telephone: **+44 (0)1772 323529** Email: **sales@dixoneurope.co.uk**

Dixon High Purity BioPharm Fittings

Dixon Group Europe's range of high purity BioPharm fittings comply with ASME BPE-2009-Table DT-5-1.



BPE Table #DT-7

90° ELBOWS			
PL FINISH - SF1	PM FINISH - SF4	SIZE	A
T2S-050PL	T2S-050PM	½"	3.00
T2S-075PL	T2S-075PM	¾"	3.00
T2S-100PL	T2S-100PM	1"	3.00
T2S-150PL	T2S-150PM	1½"	3.75
T2S-200PL	T2S-200PM	2"	4.75

Also offered clamp end.

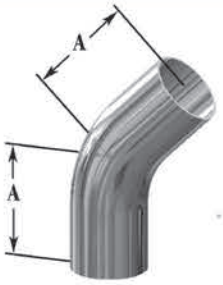

BPE Table #DT-8

45° ELBOWS			
PL FINISH - SF1	PM FINISH - SF4	SIZE	A
T2KS-050PL	T2KS-050PM	½"	2.250
T2KS-075PL	T2KS-075PM	¾"	2.250
T2KS-100PL	T2KS-100PM	1"	2.250
T2KS-150PL	T2KS-150PM	1½"	2.500
T2KS-200PL	T2KS-200PM	2"	3.000

Also offered clamp end.

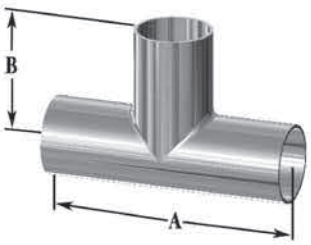

BPE Table #DT-9

TEES				
PL FINISH - SF1	PM FINISH - SF4	SIZE	A	B
T7WWW-050PL	T7WWW-050PM	½"	3.750	1.875
T7WWW-075PL	T7WWW-075PM	¾"	4.000	2.000
T7WWW-100PL	T7WWW-100PM	1"	4.250	2.125
T7WWW-150PL	T7WWW-150PM	1½"	4.750	2.375
T7WWW-200PL	T7WWW-200PM	2"	5.750	2.875

Also offered clamp end.

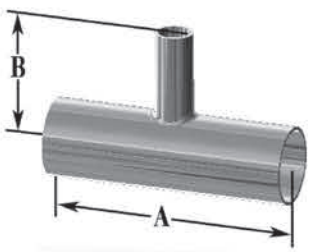

BPE Table #DT-10

REDUCING TEES				
PL FINISH - SF1	PM FINISH - SF4	SIZE	A	B
T7RWWW-075050PL	T7RWWW-075050PM	¾" x ½"	4.000	2.000
T7RWWW-100050PL	T7RWWW-100050PM	1" x ½"	4.250	2.125
T7RWWW-100075PL	T7RWWW-100075PM	1" x ¾"	4.250	2.125
T7RWWW-150050PL	T7RWWW-150050PM	1½" x ½"	4.750	2.375
T7RWWW-150075PL	T7RWWW-150075PM	1½" x ¾"	4.750	2.375
T7RWWW-150100PL	T7RWWW-150100PM	1½" x 1"	4.750	2.375
T7RWWW-200050PL	T7RWWW-200050PM	2" x ½"	5.750	2.625
T7RWWW-200075PL	T7RWWW-200075PM	2" x ¾"	5.750	2.625
T7RWWW-200100PL	T7RWWW-200100PM	2" x 1"	5.750	2.625
T7RWWW-200150PL	T7RWWW-200150PM	2" x 1½"	5.750	2.625

Also offered clamp end.

PL Finish – SF1

OD = 32Ra (0.8Ra micron) Mechanically Polished
ID = 20Ra Mechanically Polished

PM Finish – SF4

OD = 32Ra (0.8Ra micron) Mechanically Polished
ID = 15Ra Mechanically Polished and Electropolished

Dixon Group Europe's range of high purity BioPharm fittings comply with ASME BPE-2009-Table DT-5-1.



BPE Table #DT-11

CONCENTRIC REDUCERS

PL Finish - SF1	PM Finish - SF4	Size	A
T31W-075050PL	T31W-075050PM	¾" x ½"	4.00
T31W-100050PL	T31W-100050PM	1" x ½"	4.50
T31W-100075PL	T31W-100075PM	1" x ¾"	4.00
T31W-150050PL	T31W-150050PM	1½" x ½"	5.50
T31W-150075PL	T31W-150075PM	1½" x ¾"	5.00
T31W-150100PL	T31W-150100PM	1½" x 1"	5.00
T31W-200050PL	T31W-200050PM	2" x ½"	7.75
T31W-200075PL	T31W-200075PM	2" x ¾"	7.25
T31W-200100PL	T31W-200100PM	2" x 1"	7.25
T31W-200150PL	T31W-200150PM	2" x 1½"	5.25

Also offered clamp end.

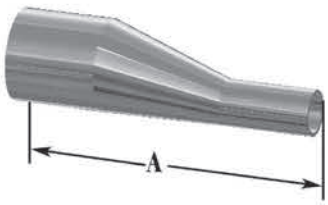

BPE Table #DT-11

ECCENTRIC REDUCERS

PL Finish - SF1	PM Finish - SF4	Size	A
T32W-075050PL	T32W-075050PM	¾" x ½"	4.00
T32W-100050PL	T32W-100050PM	1" x ½"	4.50
T32W-100075PL	T32W-100075PM	1" x ¾"	4.00
T32W-150050PL	T32W-150050PM	1½" x ½"	5.50
T32W-150075PL	T32W-150075PM	1½" x ¾"	5.00
T32W-150100PL	T32W-150100PM	1½" x 1"	5.00
T32W-200050PL	T32W-200050PM	2" x ½"	7.75
T32W-200075PL	T32W-200075PM	2" x ¾"	7.25
T32W-200100PL	T32W-200100PM	2" x 1"	7.25
T32W-200150PL	T32W-200150PM	2" x 1½"	5.25

Also offered clamp end.



BPE Table #DT-22

AUTO WELD FERRULES

PL Finish - SF1	PM Finish - SF4	Size	A
TL14AM7-050PL	TL14AM7-050PM	½"	1.75
TL14AM7-075PL	TL14AM7-075PM	¾"	1.75
TL14AM7-100PL	TL14AM7-100PM	1"	1.75
TL14AM7-150PL	TL14AM7-150PM	1½"	1.75
TL14AM7-200PL	TL14AM7-200PM	2"	2.25
TL14AM7-250PL	TL14AM7-250PM	2½"	2.25
TL14AM7-300PL	TL14AM7-300PM	3"	2.25
TL14AM7-400PL	TL14AM7-400PM	4"	2.25

Also offered clamp end.

PL Finish – SF1

OD = 32Ra (0.8Ra micron) Mechanically Polished
ID = 20Ra Mechanically Polished

PM Finish – SF4

OD = 32Ra (0.8Ra micron) Mechanically Polished
ID = 15Ra Mechanically Polished and Electropolished

Telephone: **+44 (0)1772 323529** Email: **sales@dixoneurope.co.uk**

Clamps Accessories

Service pressure ratings are based on the following parameters: matching elastomer gaskets and weld ferrules properly aligned and assembled with the clamps tightened to the required torques. Tests are done hydrostatically with no water hammer or shock loads. Please note the pressure ratings of the described unions are above the recommended pipe line operating pressures.



SINGLE PIN HEAVY DUTY CLAMPS WITH CROSS HOLE WING NUT - 13MHHM - 316

PART NO.	Tube OD	Service Pressure Rating @ 21°C (70°F)*	Service Pressure Rating @ 121°C (250°F)*	A
13MHHM-R100150	1" - 1½"	500	300	2.122
13MHHM-R200	2"	450	250	2.654
13MHHM-R250	2½"	400	200	3.185
13MHHM-R300	3"	350	175	3.717
13MHHM-R400	4"	300	150	4.820

*wing nut tightened to 25in. lb of torque



SINGLE PIN HEAVY DUTY CLAMPS WITH CROSS HOLE WING NUT - 13MHHM - 304

PART NO.	Tube OD	Service Pressure Rating @ 21°C (70°F)*	Service Pressure Rating @ 121°C (250°F)*	A
13MHHM50-75	½" - ¾"	1500	1200	1.062
13MHHM100-150	1" - 1½"	500	300	2.122
13MHHM200	2"	450	250	2.654
13MHHM250	2½"	400	200	3.185
13MHHM300	3"	350	175	3.717
13MHHM400	4"	300	150	4.820

*wing nut tightened to 25in. lb of torque



PTFE GASKETS

PART NO.	SIZE
42MP-G50	½"
42MP-G75	¾"
40MP-G100	1"
40MP-G150	1½"
40MP-G200	2"
40MP-G250	2½"
40MP-G300	3"
40MP-G400	4"

- Colour code: no dot
- Meets 21CFR 177.1550
- Passed U.S.P. Class VI Cytotoxicity testing
- Not recommended for use with bolted clamps

CAUTION

PTFE is a material subject to plastic flow. When cycled through heat and then cooled down in process lines, PTFE gaskets will not return to the original configuration and it will continue to compress as the cycling continues. This plastic flow will allow leakage if clamp torques are not maintained.

FOR FULL TECHNICAL BIOPHARM DETAILS SEE PAGES 214-216

Hose Fittings



HOLEDALL® RJT EXTERNAL CRIMP STEM	
PART NO.	**SIZE**
FEMALE	
HA0224	1"
HA0225	1 1/2"
HA0226	2"
HA0227	2 1/2"
HA0228	3"
HA0294	4"
MALE	
HA0219	1"
HA0220	1 1/2"
HA0221	2"
HA0222	2 1/2"
HA0223	3"
HA0293	4"

Please note: All stems are manufactured to suit inch bore hoses (not metric hose bores).



HOLEDALL® DIN EXTERNAL CRIMP STEM	
PART NO.	**SIZE**
FEMALE	
HA0239	DN25
HA0240	DN40
HA0241	DN50
HA0242	DN65
HA0243	DN80
HA0298	DN100
MALE	
HA0234	DN25
HA0235	DN40
HA0236	DN50
HA0237	DN65
HA0238	DN80
HA0297	DN100

Please note: All stems are manufactured to suit inch bore hoses (not metric hose bores).



HOLEDALL® IDF EXTERNAL CRIMP STEM	
PART NO.	**SIZE**
FEMALE	
HA0628	1"
HA0629	1 1/2"
HA0630	2"
HA0631	2 1/2"
HA0632	3"
HA0633	4"
MALE	
HA0634	1"
HA0635	1"
HA0636	2"
HA0637	2 1/2"
HA0638	3"
HA0639	4"

Please note: All stems are manufactured to suit inch bore hoses (not metric hose bores).



HOLEDALL® SMS EXTERNAL CRIMP STEM

PART NO.	SIZE
FEMALE	
HA0616	1"
HA0617	1 1/2"
HA0618	2"
HA0619	2 1/2"
HA0620	3"
HA0621	4"
MALE	
HA0622	1"
HA0623	1 1/2"
HA0624	2"
HA0625	2 1/2"
HA0626	3"
HA0627	4"

Please note: All stems are manufactured to suit inch bore hoses (not metric hose bores).



HOLEDALL® CLAMP TYPE EXTERNAL CRIMP STEM

PART NO.	SIZE
HA0640	1"
HA0641	1 1/2"
HA0642	2"
HA0643	2 1/2"
HA0644	3"
HA0645	4"

Please note: All stems are manufactured to suit inch bore hoses (not metric hose bores).
1/2" & 3/4" available on request.



HOLEDALL® CLAMP TYPE EXTERNAL CRIMP FERRULES

PART NO.	SIZE	DIN SIZES	HOSE OD RANGE (mm) From	To
HA0249-43-3	1"	DN25	35.7	36.5
HA0249-44-3	1"	DN25	36.9	37.7
HA0249-46-3	1"	DN25	38.1	38.9
HA0249-47-3	1"	DN25	39.3	40.1
HA0249-48-3	1"	DN25	40.5	41.3
HA0250-56-3	1 1/2"	DN40	48.4	49.6
HA0250-58-3	1 1/2"	DN40	50.0	51.2
HA0250-59-3	1 1/2"	DN40	51.6	52.8
HA0250-61-3	1 1/2"	DN40	53.2	54.4
HA0251-70-3	2"	DN50	62.7	63.9
HA0251-72-3	2"	DN50	64.3	65.5
HA0251-74-3	2"	DN50	65.9	67.1
HA0251-75-3	2"	DN50	67.4	68.7
HA0252-84-3	2 1/2"	DN65	76.1	78.1
HA0253-98-3	3"	DN80	91.7	92.9
HA0253-100-3	3"	DN80	92.1	93.3
HA0253-101-3	3"	DN80	93.6	94.9
HA0253-103-3	3"	DN80	95.2	96.5
HA0253-105-3	3"	DN80	96.8	98.0
HA0253-106-3	3"	DN80	98.4	99.6
HA0301-129-3	4"	DN100	117.5	118.7
HA0301-130-3	4"	DN100	119.0	120.3

Smooth Tails



DIN 11851 NUT & LINER WITH SMOOTH TAIL - MALE	
PART NUMBER	**SIZE**
MM15	DN15
MM20	DN20
MM25	DN25
MM32	DN32
MM38	DN38
MM50	DN50
MM65	DN65
MM75	DN75
MM100	DN100

E



DIN 11851 NUT & LINER WITH SMOOTH TAIL - FEMALE	
PART NUMBER	**SIZE**
MF15	DN15
MF20	DN20
MF25	DN25
MF32	DN32
MF38	DN38
MF50	DN50
MF65	DN65
MF75	DN75
MF100	DN100



SMS NUT & LINER WITH SMOOTH TAIL - MALE	
PART NUMBER	**SIZE**
SMM25	1”
SMM38	1.5”
SMM50	2”
SMM65	2.5”
SMM80	3”
SMM100	4”

Also available with clamp, RJT and IDF ends on request.



SMS NUT & LINER WITH SMOOTH TAIL - FEMALE	
PART NUMBER	**SIZE**
SMF25	1”
SMF38	1.5”
SMF50	2”
SMF65	2.5”
SMF80	3”
SMF100	4”

Also available with clamp, RJT and IDF ends on request.

Telephone: **+44 (0)1772 323529** Email: **sales@dixoneurope.co.uk**

Safety Clamps BS EN 14420-3:2004





SAFETY CLAMPS		
PART NO.	**SIZE (mm)**	**MATERIAL**
SC13X6AL	13 x 6	Aluminium
SC19X6AL	19 x 6	Aluminium
SC25X6AL	25 x 6	Aluminium
SC32X6AL	32 x 6	Aluminium
SC38X6.5AL	38 x 6.5	Aluminium
SC38X8AL	38 x 8	Aluminium
SC38X10AL	38 x 10	Aluminium
SC50X8AL	50 x 8	Aluminium
SC50X10AL	50 x 10	Aluminium
SC63X8AL	63 x 8	Aluminium
SC65X10AL	65 x 10	Aluminium
SC75X7.5AL	75 x 7.5	Aluminium
SC75X10AL	75 x 10	Aluminium
SC100X8AL	100 x 8	Aluminium
SC100X10AL	100 x 10	Aluminium
SC100X12AL	100 x 12	Aluminium
SC150X10AL	150 x 10	Aluminium
SC19X6SS	19 x 6	316 Stainless Steel
SC25X6SS	25 x 6	316 Stainless Steel
SC38X6.5SS	38 x 6.5	316 Stainless Steel
SC38X8SS	38 x 8	316 Stainless Steel
SC50X6SS	50 x 6	316 Stainless Steel
SC50X8SS	50 x 8	316 Stainless Steel
SC50X10SS	50 x 10	316 Stainless Steel
SC63X8SS	63 x 8	316 Stainless Steel
SC65X7SS	65 x 7	316 Stainless Steel
SC75X7.5SS	75 x 7.5	316 Stainless Steel

Note: First number in the part reference denotes the inside diameter of the hose that clamp will suit while the second number denotes the wall thickness.

E.G.: Part SC50X8AL will suit a 50mm I.D. hose with an 8mm wall = 66mm O.D.

Hygienic Breakaway Coupler



Applications:

Minimises spillage and damage associated with pull away and drive away incidents

Features:

- available in 2.5" and 3" connections
- designed to be installed between a fixed point and a hose
- coupling breaks away with an excessive load
- EPDM standard clamp gasket
- working pressure: 350 PSI (24 Bar) @ 21°C (70°F)
- 13kN break load bolts standard, other break loads available
- 316 stainless steel polished to standard <32Ra, 3A finish
- RJT, Clamp, DIN, SMS, IDF and other connections available on request

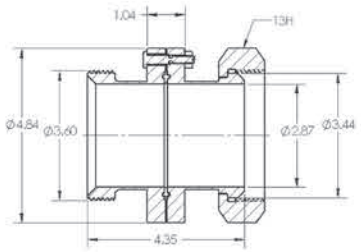

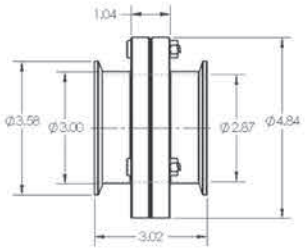

Washdown Guns

- Manufactured from high quality brass & stainless steel components
- Works with effortless one hand operation
- Automatic shut off valve provides economical water consumption
- Trigger latching mechanism keeps nozzle open reducing hand fatigue
- Thick rubber coat protects against cold, heat and impact
- 1/2" BSP threaded inlet
- Flow Capacity: 25/L min @ 500 kpa
- 6.6 GPM @72psi
- Max. Operating Pressure: 2400 kpa (300psi)
- Blue Rubber Cover



FLOWBOSS WASHDOWN GUN
PART NO.
FLOBOSS-050

Telephone: **+44 (0)1772 323529** Email: **sales@dixoneurope.co.uk**

San-Hygienic Food Grade Suction and Delivery Hose 10 bar



Application: SAN-HYGIENIC and SAN-HYGIENIC CRUSHA are high quality suction and delivery hoses. Manufactured from odourless and taste free rubber materials approved by the FDA, are free of phthalates and animal derivatives, and are highly flexible smooth bore hoses suitable for the transfer of liquid foodstuffs. Included in the Brewery, Dairy and Beverage industries etc.

Working pressure: 10 bar (150psi), safety factor 3:1. Vacuum 0.90 bar or 0.60 bar as appropriate.

Lining: FDA compliant, white smooth food grade rubber.

Reinforcement: SAN-HYGIENIC - high strength synthetic plies, twin carbon steel helices.

SAN-HYGIENIC CRUSHA - high strength synthetic plies and embedded nylon helix.

Cover: SAN-HYGIENIC red or blue smooth cloth finish, resistant to abrasion and ozone.

SAN-HYGIENIC CRUSHA blue convoluted cloth finish, resistant to abrasion and ozone.

Branding: White background tape - DIXON logo
SAN-HYGIENIC FDA 10 bar SF 3:1 Vac 0.90 bar, DIXON logo SAN-HYGIENIC CRUSHA FDA 10 bar SF 3:1 Vac 0.60 bar, as appropriate.

Temperature range: -35°C to +80°C. Cleaning in accordance with 3-A Sanitary Standard Class II, steam sterilisation up to 121°C for 30 minutes at maximum 2 bar pressure, bactericidal treatment with chemical solutions up to 82°C at maximum 10 bar pressure, depending on solution and concentration.

Coil length: 40metres.

Size range: 19mm-102mm (CRUSHA 51,63,76 metres).

All sizes are available in loose lengths or assemblies with all types of Holedall® External Crimp and IX Internal Expansion 316 stainless steel hygienic end connections in RJT, DIN, SMS, IDF, and Clamp form.

San-sil™ Silicone Suction and Delivery Hose



Application:	San-sil is a premium grade platinum cured, odourless, tasteless and completely non-toxic silicone suction and delivery hose with a smooth liner and cover. Suitable for transferring liquid or semi-liquid chemical, food, cosmetic and pharmaceutical product. It is not suitable for handling abrasive particles. Meets or exceeds European Pharmacopoeia 3.1.9, FDA CFR 177.2600, BgVV & L11A and USP XXV1 Class V1.
Working pressure:	10 bar (145psi) to 3 bar (46psi) depending on bore size, safety factor 4:1. Full vacuum up to and including 51mm bore.
Lining:	FDA compliant transparent seamless extruded* smooth silicone.
Reinforcement:	Polyester fabrics, 316L stainless steel wire helix.
Cover:	FDA compliant transparent smooth silicone.
Temperature range:	-60°C to +180°C. (short periods +220°C Sterilisation by hot air or steam at +134°C, pressure 2.07 bar. The maximum recommended time at 135°C is 45minutes.

All sizes are available in loose lengths or assemblies with all types of Holedall® External Crimp and IX Internal Expansion 316 stainless steel hygienic end connections in RJT, DIN, SMS, IDF, and Clamp form. Bounce rings or spiral guard protection available.

Telephone: **+44 (0)1772 323529** Email: **sales@dixoneurope.co.uk**

A235 - Steam Hot Water & Food Hose 7 bar



Application:	Multi functional premium quality mandrel built steam, hot water and food hose. Widely used in the food industry sector e.g. creameries, bottling plants, breweries, dairies, food processing, including abattoirs. Resistant to fatty foods. Cover non-marking and pricked to allow ventilation of heat when used at high temperatures and reduce the risk of separation
Working pressure:	7 bar (101 psi) steam. 17 bar (246 psi) hot wash upto +95°C. Designed burst pressure 70 bar (1015 psi)
Lining:	Extruded white food grade EPDM, FDA approved compounds.
Reinforcement:	High strength textile yarns
Cover:	Blue EPDM, pin pricked
Branding:	White tape DIXON logo A235 STEAM HOT WATER FOOD FDA 7BAR SF 10:1 DATE OF MANUFACTURE DIXON ASSEMBLY W.P. _____
Temperature range:	-20°C to +170°C

Available in 13, 16, 19mm ID and up to 40metres coil length.

Flexible Convoluted & Smooth Bore PTFE Hose & Hose Assemblies

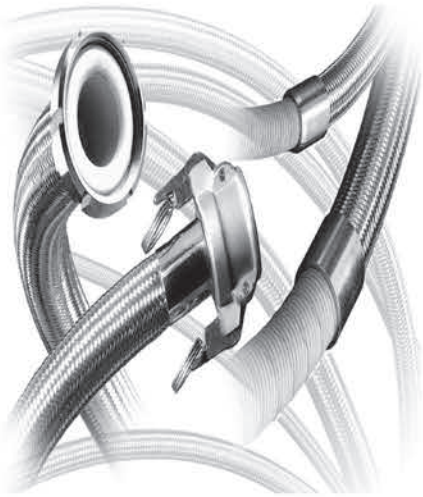

The Dixon range of smooth and convoluted PTFE hose and hose assemblies are available from 1/4 inch through to 1 inch and 3/8 inch to 4 inch respectively.

San-Flon Hose is available as virgin convoluted or smooth bore PTFE or with a covering. A range of outer coverings including metallic, glass fibre and polymer braid are available. Bounce Ring Protectors and Spiral Guards can be fitted.

All hoses are tested 150 p.s.i air under water and can be supplied with a wide range of certification if required. This must be specified at the time of enquiry or order.

We can also make your specialist requirements such as heat traced and duplex assemblies.

Antistatic liners are available for when electrically resistive fluids are being transferred at high flow rates.

High Purity BioPharm Aseptic Diaphragm Valve

Our product offering of standard 2-way valves, innovative custom fabrications and modular block body designs solve the more demanding process problems.

Bio Series ¼" - ½"	Fractional ½" - ¾"	Sterile Access and L Pattern Fabrications	Standard 1" - 4"	Zero Static Tees and U Bends	Multi-Port Divert Valves	Multi-Cluster Valve Assemblies
						
						
						
						
						
						

Features:
- Quick turn around
- 3D models
- Application engineering service

Applications: Pharmaceutical, bio-processing, cosmetics, food and beverage, fine chemicals and semi-conductor industries where aseptic and hygienic conditions are required.

Processes: Highly sterile media, ultra-pure water, WFI (Water for Injection), ultra-pure chemicals, intermediate and end products in the pharmaceutical and bio-processing industries.

Features: Sterile, reduced contact surface and hold up volume, easily drained, elimination of cross contamination and customer-specific process designs.

Telephone: **+44 (0)1772 323529** Email: **sales@dixoneurope.co.uk**

Innovative Design

Optimised internal cleaning because of Circumferential Defined Sealing Angle (CDSA-Design) between the process diaphragm and valve body.

- Product entrapment reduced or eliminated on the body bonnet flange.
- Better sealing performance and evenly distributed closing force.
- Diaphragm lifetime is extended.

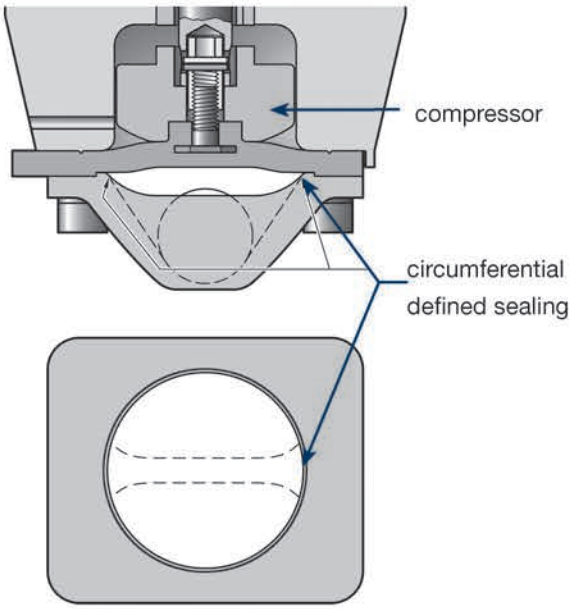

Bodies

- 316L – manufactured to ASME BPE Table DT-3
- full material traceability standard
- standard 316L bodies are forged or machined
- cast bodies are available when acceptable



Bonnets

- manual and actuated
- three different styles
  - manual hand wheel
  - piston actuator
  - diaphragm actuator
- available in:
  - stainless steel
  - thermoplastic
  - combination of both

Diaphragms

- EPDM
- Modified PTFE (TFM)/EPDM
- All diaphragms are FDA Compliant and conform to USP Class VI.



Innovative Design

L Pattern



Utilised in a vertical piping system to eliminate dead legs in point of use applications of high purity water systems or any other distribution systems.

Sterile Access



Utilised in a horizontal piping system where the main valve is oriented at the self-draining angle and the access port is at the lower drainable point of the water way.

Multiport Advantages

- customer's specific design
- combination of many different nominal diameters
- optimised drainability
- minimised dead leg
- reduces surface contact, hold up volume and cross contamination of the product
- reduction of fittings, tubing and field welds in the system
- reduces qualification and validation documentation requirement
- all end connections and materials are available according to the customer's specification





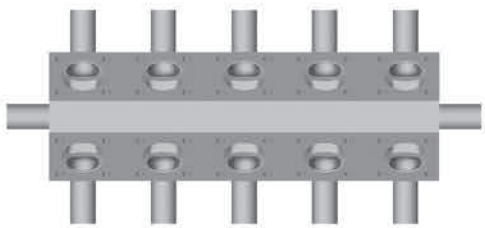

Note: many different configurations are available, contact Dixon.

Telephone: **+44 (0)1772 323529** Email: **sales@dixoneurope.co.uk**

Specialty Valves and Process Solutions

Tank Valves

- tank body valves machined from solid bar stock material
- other alloy options available as specified
- minimised dead leg and internal sump
- suitable for mounting with piston and diaphragm actuators
- optional manual operation via an extended crankshaft stem



Sterile Sampling Unit

- suitable to take sterile samples from all liquids in aseptic processes
- sample can be taken with pneumatically controlled diaphragm valves or typically as a system with manual valves and a handle
- bring the complete unit in the laboratory for analysing the sample in sterile conditions



Purified Steam Sampling Unit

- high condensation performance
- time saving sampling
- compact design
- tube end or clamp end connection
- integrated sampling and control valve for cooling circuit
- easy installation due to standardised compact unit
- unit for mobile use



Diaphragms

EPDM

Ethylene-propylene elastomer peroxide cured. EPDM is a specifically developed compound reinforced with a vulcanised woven fabric inlay and is always manufactured in the moulded open position. This diaphragm construction achieves higher stability for the diaphragm at elevated temperatures and pressures. In addition, the woven fabric inlay is vulcanised over the embedded compressor stud in order to strengthen the elastomer-metal connection. Thus, the EPDM diaphragm is ideal for vacuum applications.

PTFE (TFM)

These PTFE diaphragms have been designed and offer the highest degree of chemical resistance, increased stability, longer flex life, less porosity, reduced cold flow and superior performance through temperature fluctuations between hot and cold and steam sterilisation cycles.

MA8 and MA10

The diaphragm dimensions MA8 and MA10 are designed as one-piece diaphragms: This means that the EPDM back is bonded with the PTFE.

The diaphragm is always manufactured in the moulded open position. These one-piece diaphragms have less surface area and are subject to shorter linear strokes which explain the excellent performance that has proved itself over time.

MA8 diaphragm incorporates an elastomer button for assembly with the valve operating mechanism. The MA10 utilises a threaded stud assembly with the valve operating mechanism. Both these features eliminate the potential for point loading at the centre of the diaphragm.

MA25 to MA100

The diaphragm dimensions MA25 to MA100 are designed as two-piece diaphragms consisting of a separate EPDM backing cushion and PTFE diaphragm. The diaphragm is always manufactured in the moulded closed position. The advantage of this design for the MA25 to MA100 is that the diaphragm is in its moulded shape while in the closed position of the valve. This reduces the force to close the valve and increases the life of the diaphragm.

In the two-piece diaphragms the threaded stud connection is embedded in the PTFE of the diaphragm. To eliminate the potential of point loading at the centre of the diaphragm, a floating suspension connection to the valve operating mechanism is utilised.

Code		18	30	51	44
MA		8-100	8, 25, 40, 50	10	25-100
Material		EPDM	PTFE/EPDM		PTFE/EPDM
Design		One-piece Moulded open	One-piece Moulded open		Two-piece Moulded closed
Temp. Range	(°C)	-40 to 150 *	-20 to 150		-20 to 160
	(°F)	-40 to 300 *	-20 to 300		-20 to 320

MA8



EPDM



PTFE/EPDM one-piece

Moulded Open

MA10



EPDM



PTFE/EPDM one-piece

Moulded Open

MA25-80



EPDM
Moulded Open



PTFE/EPDM two-piece
Moulded Closed

MA100



EPDM
Moulded Open



EPDM
Moulded Closed

* The listed temperatures may apply to clean steam sterilisation protocols and may not apply to continuous steam service. Upon request, other diaphragms are available with other materials, bigger sizes and for high temperatures up to 175°C (350°F).

Telephone: **+44 (0)1772 323529** Email: **sales@dixoneurope.co.uk**

Clamp Dimensions and Cv Factors

Clamps

The clamp connection is the most popular connection for easy assembly and breakdown of process lines and valves. The clamp end connection is designed for a face-to-face joint that is leak proof and free of crevices.

The clamp end has a machined beveled seat and is used with specifically formed sealing gaskets made of EPDM or PTFE.

The gasket is inserted between the opposing clamp ends and is compressed tight with a wing nut quick disconnect clamp.

In general, the valve clamp ends are welded to the valve butt weld ends and polished according to the specified interior valve body surface finish.

The welded clamp ends are 100% visually inspected and compression tested. The clamp connections are available for all current pipe standard diameters.

If the connecting clamp ends are not identical and of the same diameter standard, there may result a reduction or step in the process piping system or the ability of self draining ends is not guaranteed.

If assembled correctly, the clamp end process system offers a smooth, crevice-free, self-aligning joint that reduces the hazards of contamination but minimises turbulence and pressure drop through the system.

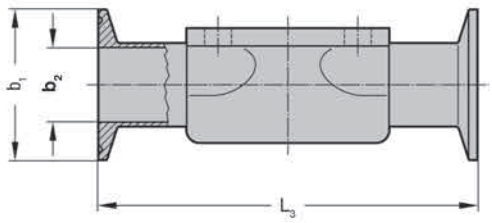

VALVE SIZE	ASME BPE ASME BPE DT-V-1			
	L3	b2	b1	
1/4"	2.5	0.18	0.992	Bio Series
3/8"	2.5	0.31	0.992	
1/2"	2.5	0.37	0.992	
3/8"	---	---	---	Standard Fractional
1/2"	3.5	0.37	0.992	
3/4"	4.0	0.62	0.992	
1/2"	4.0	0.37	0.992	Standard
3/4"	4.0	0.62	0.992	
1"	4.5	0.87	1.984	
1-1/4"	---	---	---	
1-1/2"	5.5	1.37	1.984	
2"	6.25	1.87	2.516	
2-1/2"	8.75 *	2.37	3.047	
3"	8.75	2.87	3.579	
4"	11.5	3.83	4.682	

* length differing from standard; other lengths available on request

Cv Factor

In order to design valves for a process system correctly, the valve size is determined by the required flow rate.
The Cv value is stated in the following table with regard to the nominal diameter. The Cv value is a parameter defining the flow rate in gallons per minute of water from 5-29.4°C (41-85°F) which flows through the valve at a pressure loss of 1 PSI. This applies when the valve is 100% open.

VALVE SIZE	CV VALUE	VALVE TYPE
1/4"	0.8	Bio Series
3/8"	1.6	
1/2"	2.3	
1/2"	2.6	Standard Fractional
3/4"	5.4	
1"	14.0	Standard
1-1/2"	46.8	
2"	56.2	
2-1/2"	99.5	
3"	128.7	
4"	216.5	

DV02 / DV01 - Manual Valve DN 4-15 mm (¼" - ½")

Specific Features

Type DV02

- stainless steel bonnet and hand wheel
- autoclavable

Type DV01

- stainless steel bonnet and thermoplastic hand wheel
- autoclavable

General Features

- rising hand wheel
- sealed bonnet with optical indicator
- adjustable internal travel stop
- circumferential defined sealing angle between process diaphragm and valve body
- flexible diaphragm suspension

Technical Data

- control function: manually operated
- maximum working pressure: 145 PSI (10 BAR)
- maximum working temperature: 160°C (320°F) dependent on application
- diaphragm material: EPDM or PTFE
- body material: forged 1.4435/316L ASME/BPE, investment cast 1.4435/316L, other alloys
- end connection: weld ends, clamps, special ends
- bonnets suitable for: two-way bodies, welded configurations, T-bodies, multiport bodies, tank bottom bodies
- flow rate: Cv in GPM
- diaphragm size: MA 8 for all body sizes

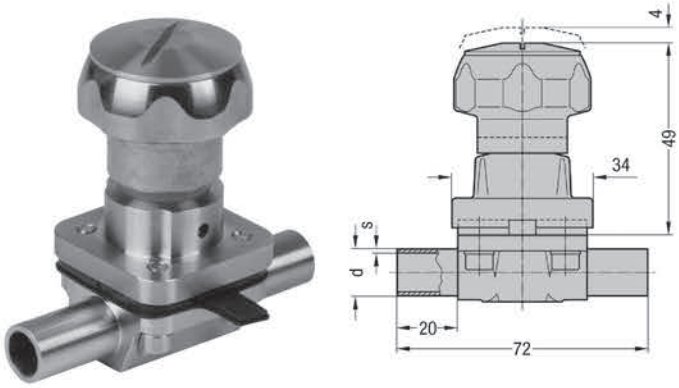

DV02

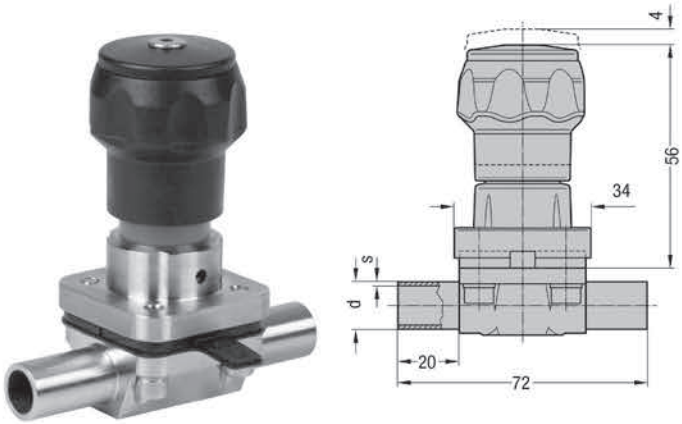

DV01

Telephone: **+44 (0)1772 323529**
Email: **sales@dixoneurope.co.uk**

DV05 / DV04 / DV03 - Manual Valve DN 8-20 mm (3/8" - 3/4")

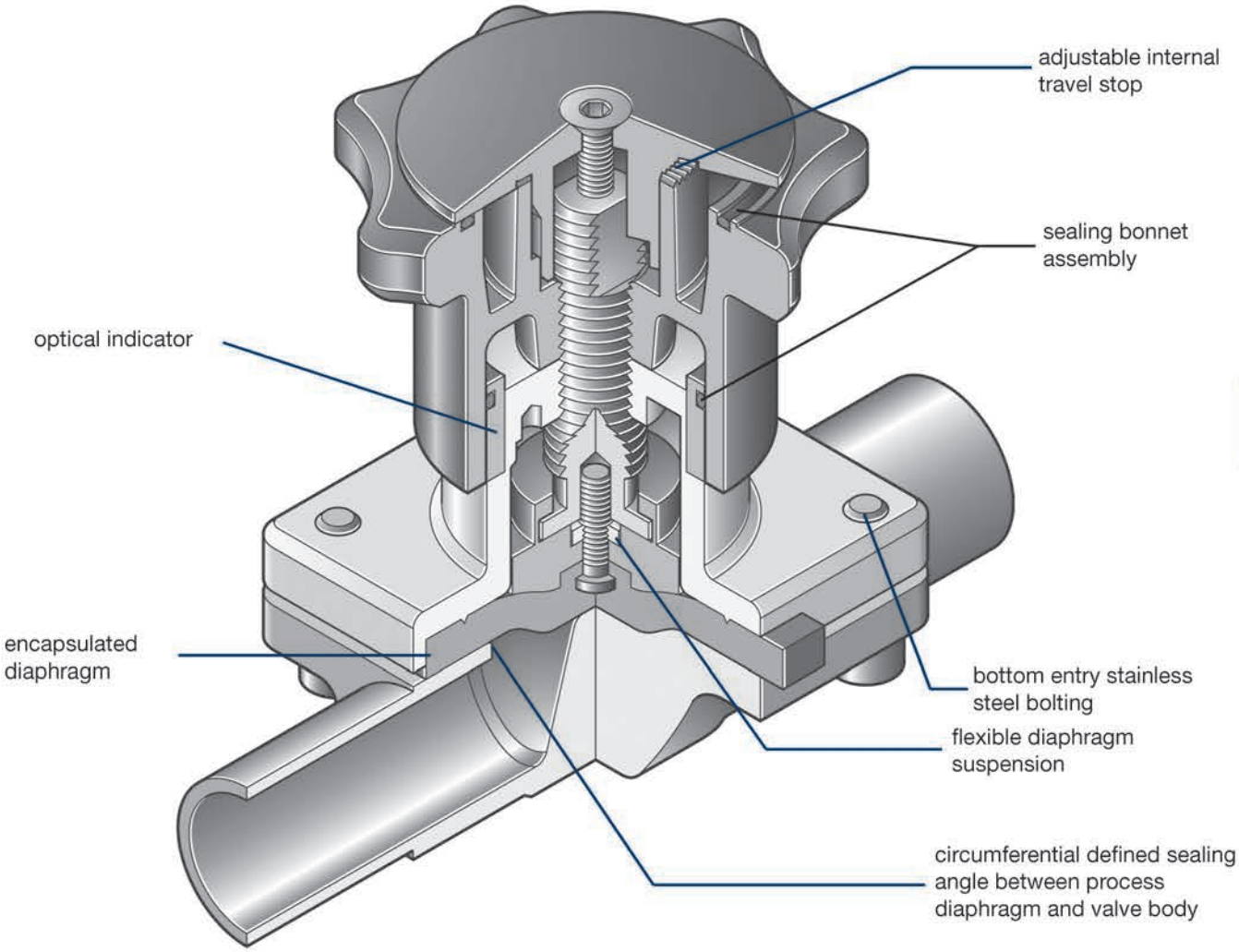

F

DV05 / DV04 / DV03 - Manual Valve DN 8-20 mm (3/8" - 3/4")

Specific Features

Type DV05

- stainless steel bonnet and hand wheel
- autoclavable

Type DV04

- stainless steel bonnet and thermoplastic hand wheel
- autoclavable

Type DV03

- thermoplastic bonnet and hand wheel

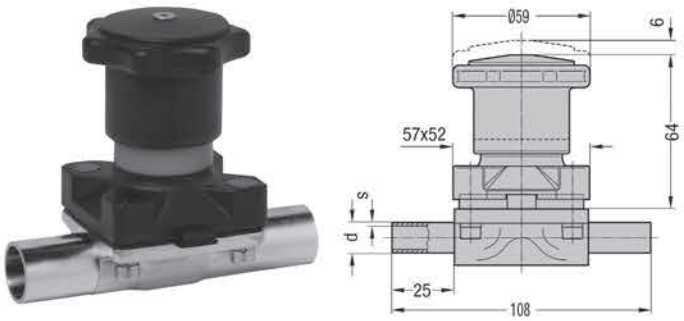

DV03

General Features

- rising hand wheel
- sealed bonnet with optical indicator
- adjustable internal travel stop
- circumferential defined sealing angle between process diaphragm and valve body
- flexible diaphragm suspension
- encapsulated diaphragm

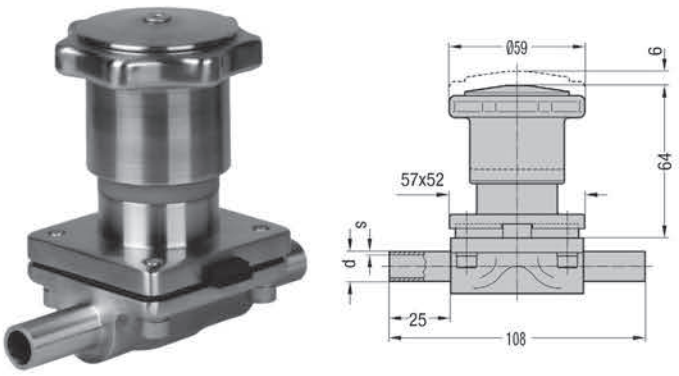

DV05

Technical Data

- control function: manually operated
- maximum working pressure: 145 PSI (10 BAR)
- maximum working temperature: 160°C (320°F) dependent on application
- diaphragm material: EPDM or PTFE
- body material: forged 1.4435/316L ASME/BPE, investment cast 1.4435/316L, other alloys
- end connection: weld ends, clamps, special ends
- bonnets suitable for: two-way bodies, welded configurations, T-bodies, multiport bodies, tank bottom bodies
- flow rate: Cv in GPM
- diaphragm size: MA 10 for all body sizes

Telephone: **+44 (0)1772 323529** Email: **sales@dixoneurope.co.uk**

DV18 - Manual Valve DN 15-100 mm (½" - 4")

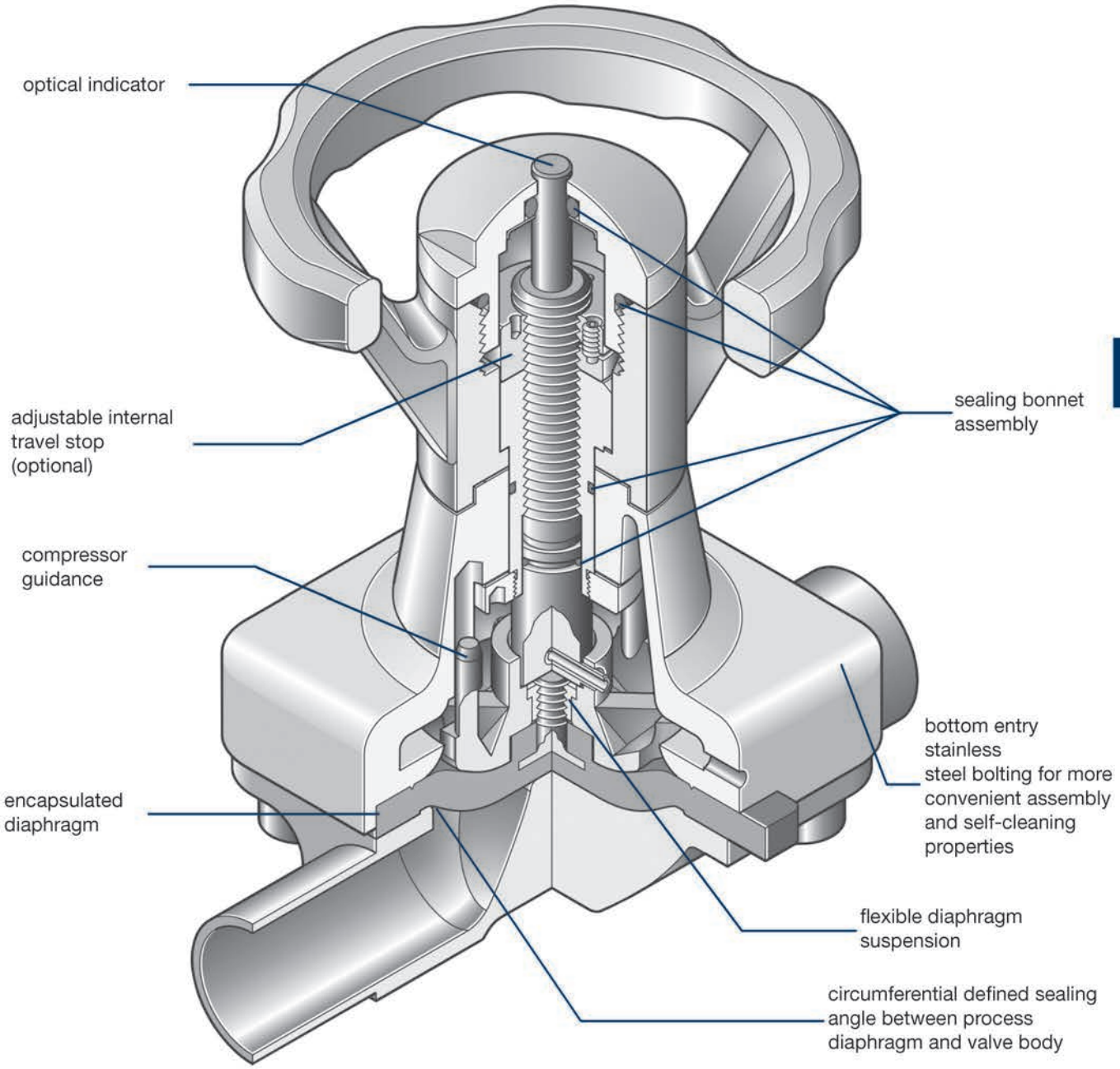

F

DV18 - Manual Valve DN 15-100 mm (½" - 4")

Features

- stainless steel bonnet and hand wheel
- sealed bonnet
- autoclavable
- circumferential defined sealing angle between process diaphragm and valve body
- flexible diaphragm suspension
- encapsulated diaphragm



DV18

Optional

- adjustable internal travel stop or stroke limiter

F

Technical Data

- control function: manually operated
- maximum working pressure: 145 PSI (10 BAR) DN 65-100 diaphragm PTFE 116 PSI (8 BAR)
- maximum working temperature: 175°C (320°F) dependent on application
- diaphragm material: EPDM or PTFE
- valve body material: forged 1.4435/316L ASME/BPE, investment cast 1.4435/316L, other alloys
- end connection: weld ends, clamps, special ends
- bonnets suitable for: two-way bodies, welded configurations, T-bodies, multiport bodies, tank bottom bodies
- flow rate: Cv in GPM
- diaphragm size: MA see table

DN (mm)	DIMENSIONS (mm)					
	MA	L	L_1	H_1	H_2	D
15-25	25	25	120	103	10	92
32-40	40	25	153	135	17	135
50	50	30	173	135	24	135
65	80	30	216	180	38	198
80	80	30	254	180	38	198
100	100	30	305	220	50	252

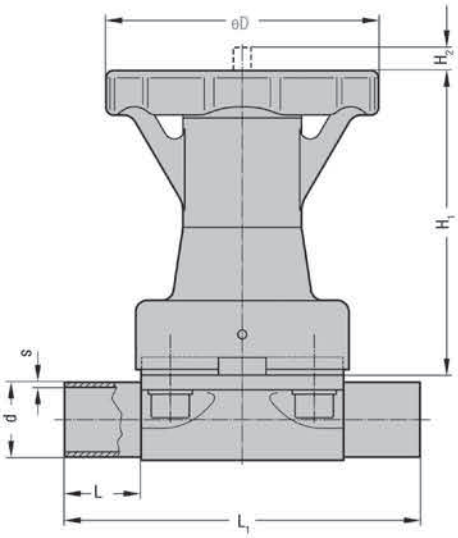

DN 15-50

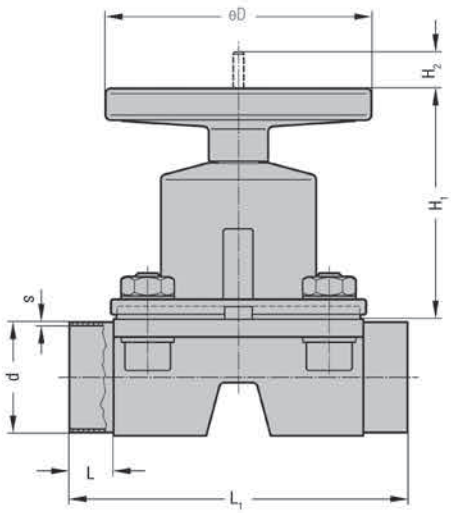

DN 65-100 (drawing MA 80)

Telephone: **+44 (0)1772 323529** Email: **sales@dixoneurope.co.uk**

DV08 – Manual Valve DN 15-100 mm (½" - 4")

Features

- stainless steel bonnet and thermoplastic hand wheel
- non rising hand wheel with optical indicator
- circumferential defined sealing angle between process diaphragm and valve body up to DN 50
- flexible diaphragm suspension
- encapsulated diaphragm

Optional

- adjustable travel stop or stroke limiter
- sealed bonnet
- autoclavable
- locking device

Technical Data

- control function: manually operated
- maximum working pressure: 145 PSI (10 BAR) DN 65-100 diaphragm PTFE 116 PSI (8 BAR)
- maximum working temperature: 175°C (320°F) dependent on application
- diaphragm material: EPDM or PTFE
- valve body material: forged 1.4435/316L ASME/BPE, investment cast 1.4435/316L, other alloys
- end connection: weld ends, clamps, special ends
- bonnets suitable for: two-way bodies, welded configurations, T-bodies, multiport bodies, tank bottom bodies
- flow rate: Cv in GPM
- diaphragm size: MA see table

DN (mm)	DIMENSIONS (mm)					
	MA	L	L_1	H_1	H_2	D
15-25	25	25	120	71	10	90
32-40	40	25	153	91	14	114
50	50	30	173	110	23	140
65	80	30	216	180	38	198
80	80	30	254	180	38	198
100	100	30	305	220	50	252



DV08

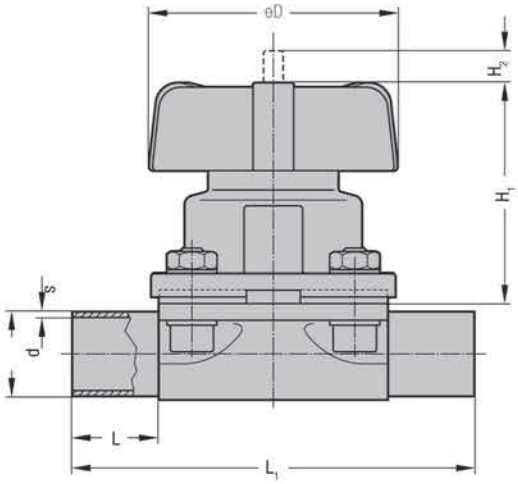

DN 15-50

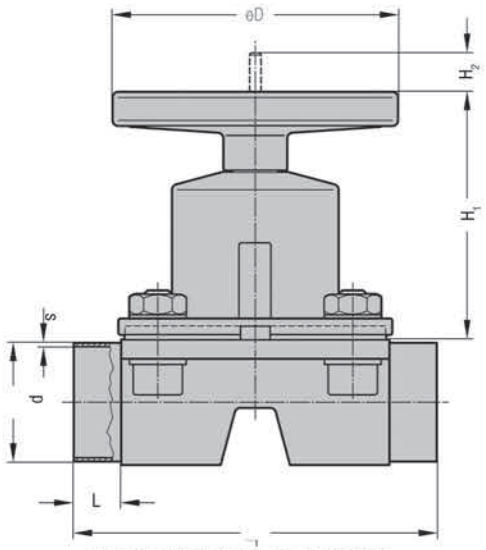

DN 65-100 (drawing MA 80)

F

DV06 – Manual Valve DN 15-100 mm (½" - 4")

Features

- thermoplastic bonnet and plastic hand wheel
- non rising hand wheel with optical indicator
- flexible diaphragm suspension
- encapsulated diaphragm
- circumferential defined sealing angle between process diaphragm and valve body up to DN 50



DV06

Optional

- adjustable travel stop or stroke limiter on top
- sealed bonnet
- locking device

F

Technical Data

- control function: manually operated
- maximum working pressure: 145 PSI (10 BAR)
  DN 65-100 diaphragm PTFE 116 PSI (8 BAR)
- maximum working temperature: standard 80°C (176°F),
  HS-version DN ≤ 50 150°C (300°F) dependent on application
- diaphragm material: EPDM or PTFE
- valve body material: forged 1.4435/316L ASME/BPE,
  investment cast 1.4435/316L, other alloys
- end connection: weld ends, clamps, special ends
- suitable for:
- bonnets up to DN 50: two-way bodies
- bonnets bigger DN 50: two-way bodies, welded configurations, T-bodies, multiport bodies, tank bottom bodies
- flow rate: Cv in GPM
- diaphragm size: MA see table

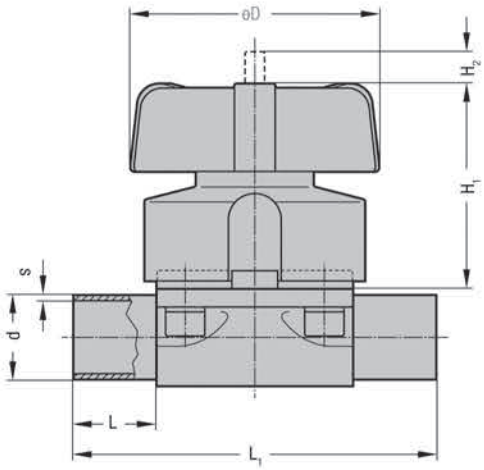

DN 15-50

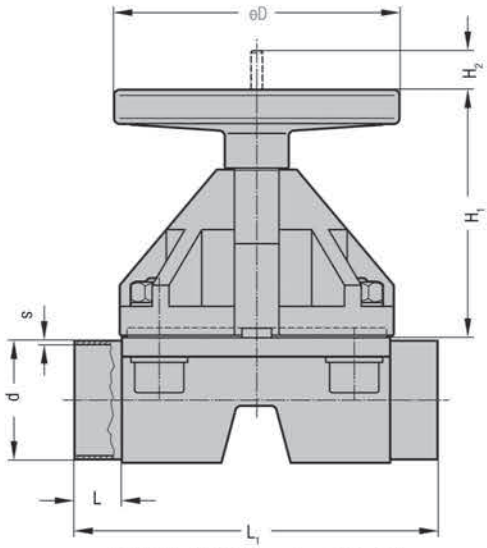

DN 65-100 (drawing MA 80)

DN (mm)	DIMENSIONS (mm)					
	MA	L	L_1	H_1	H_2	D
15-25	25	25	120	71	10	90
32-40	40	25	153	91	14	114
50	50	30	173	110	23	140
65	80	30	216	180	38	198
80	80	30	254	180	38	198
100	100	30	305	220	50	252

Telephone: **+44 (0)1772 323529** Email: **sales@dixoneurope.co.uk**

DV 905 – Manual Valve DN 15 - 50 mm (3/4" - 2")

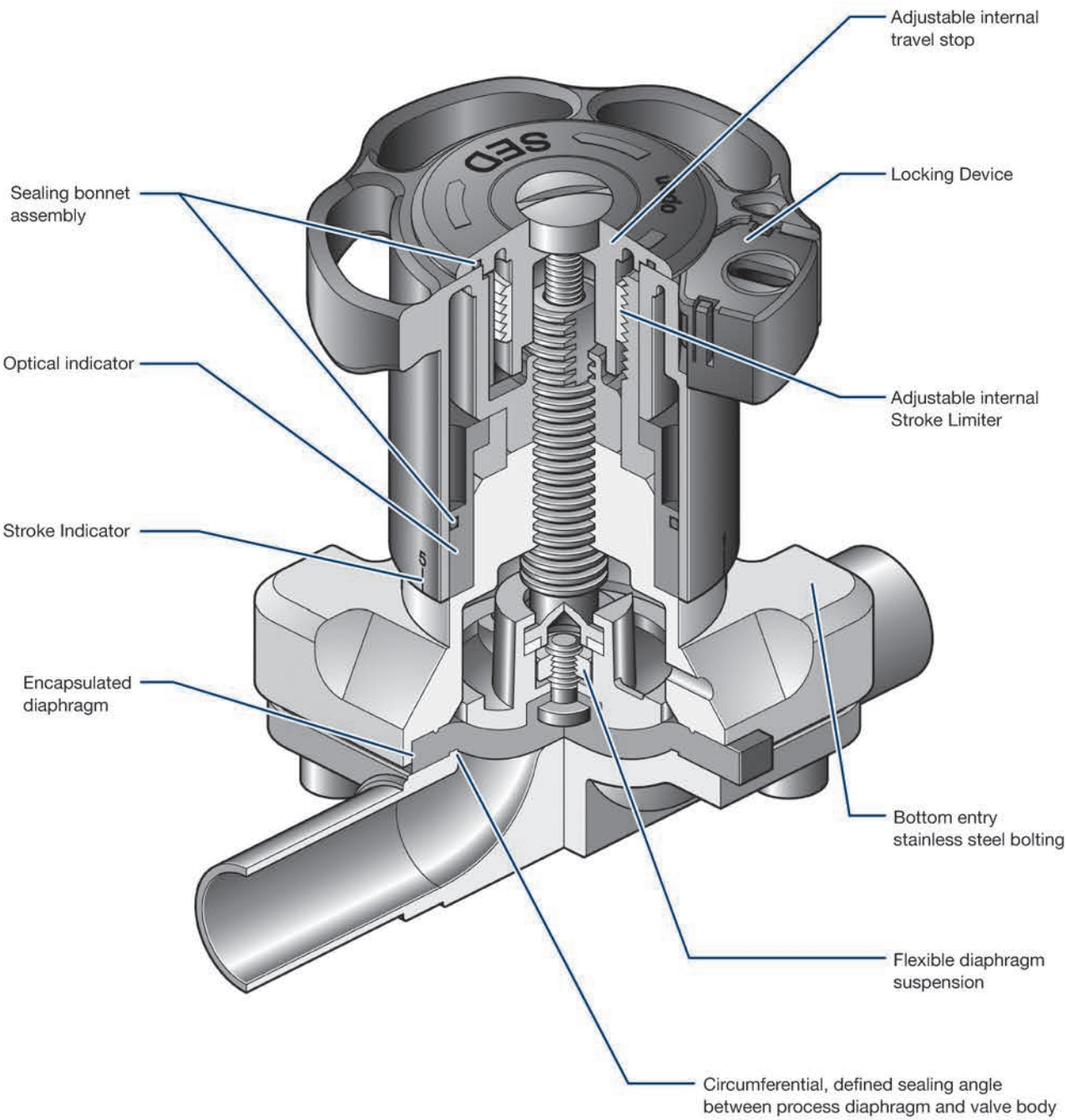

F

DV 905 – Manual Valve DN 15 - 50 mm (3/4” - 2”)

Features

- Stainless steel bonnet and plastic hand wheel
- Rising hand wheel with optical indicator and stroke indicator
- Sealed bonnet
- Internal travel stop
- Locking device
- CDSA sealing concept, see page 61
- Flexible diaphragm suspension
- Encapsulated diaphragm



Optional

- Adjustable internal stroke limiter
- U-Lock for hand wheel
- Assembly of proximity switches
- Autoclavable

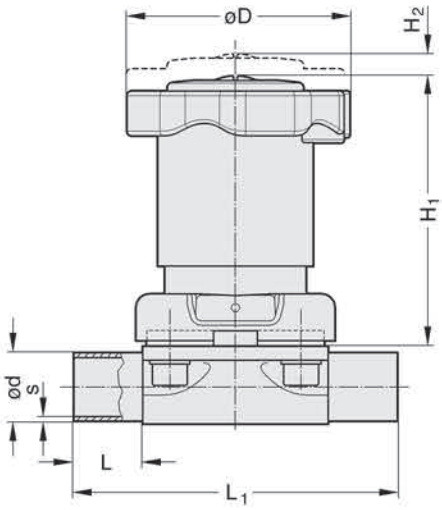

Technical Data

- Control function: Manually operated
- Max. working pressure: 10 bar (145 psi)
- Max. working temperature: 160°C (320°F) dependent on application
- Diaphragm material: EPDM or PTFE
- Valve body material: Forged 1.4435/ 316L ASME/BPE
  Investment cast 1.4435/ 316L
  Other Alloys
- End connection: Butt weld ends see fold out page 19
  Clamps and flanges see page 20 and 21
  Special ends
- Bonnets suitable for: Two-Way bodies
  Welded configurations
  T- bodies
  Multiport bodies
  Tank bottom bodies
- Flow rate: Kv in m 3/h (Cv in GPM) see page 9
- Diaphragm size: MA see table

DN (mm)	DIMENSIONS (mm)					
	MA	L	L_1	H_1	H_2	D
15-25	25	25	120	100	10	84
32-40	40	25	153	119	16	112
50	50	30	173	136	20	135

Telephone: **+44 (0)1772 323529** Email: **sales@dixoneurope.co.uk**

DV13 – Pneumatically Operated Valve DN 4-15 mm (¼" - ½")

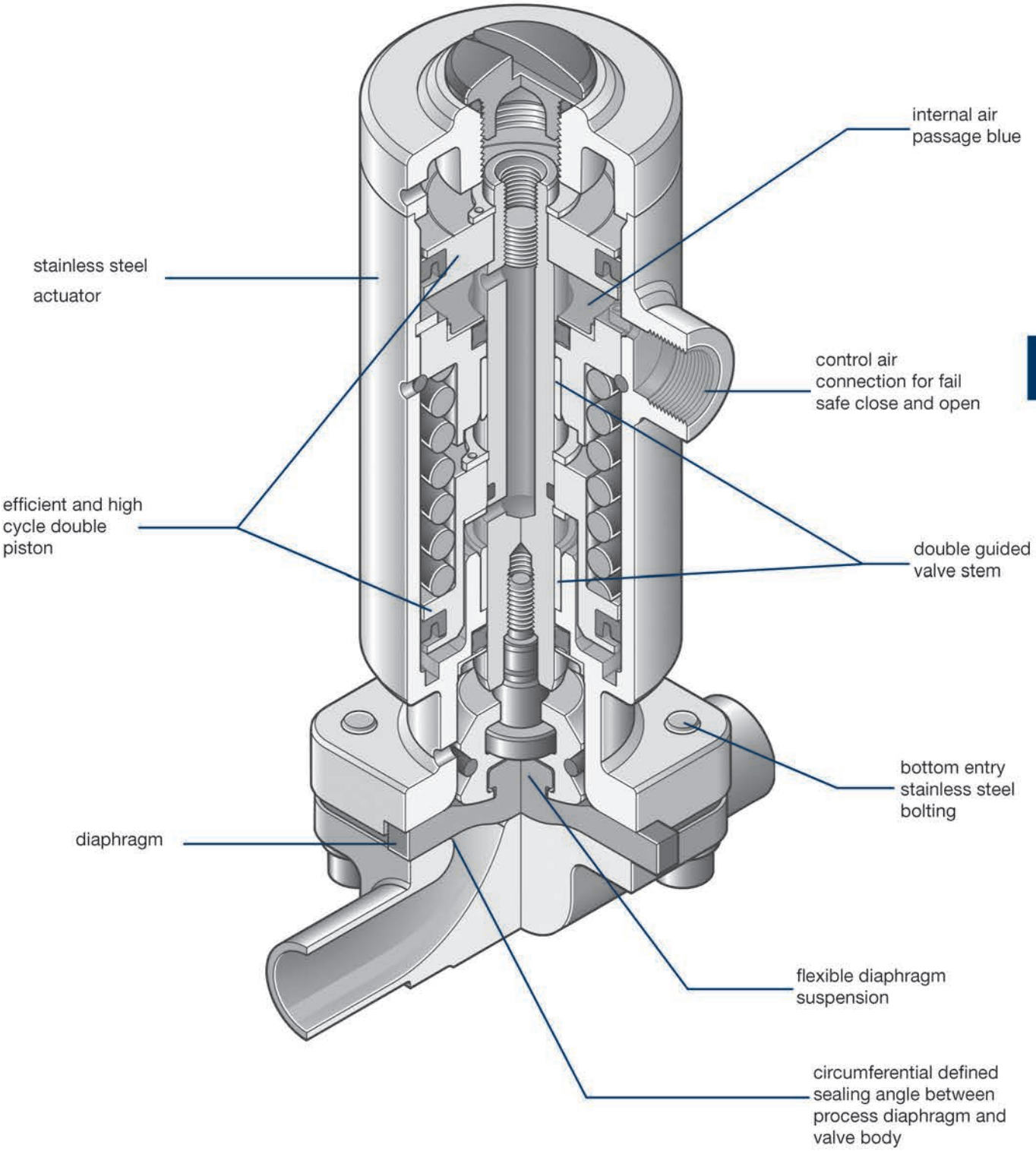

F

DV13 – Pneumatically Operated Valve DN 4-15 mm (¼" - ½")

This valve is available in a type DV13A and a type DV13J design. The type DV13A is available in the control function fail safe close and performs at a higher working pressure for standard application. The type DV13J in control function fail safe close is mainly designed for filling applications or all other instances where the working pressure is low. One advantage of this design is a longer diaphragm life due to less spring force. Other advantages include a very high cycle life and a smaller overall dimensionsal height. Type DV13J is also available in control functions fail safe open and double acting for standard working pressures.

Features

- high cycle double piston stainless steel actuator
- compact design, the outside diameter of the actuator is the same size as the bonnet flange connecting the diaphragm and body
- advantages in multiport bodies and manifold valve assemblies
- control air connection on the top, away from the process product line
- direction of control air connection is mountable in 90° rotations
- circumferential defined sealing angle between process diaphragm and valve body
- flexible diaphragm suspension
- clean and polished exterior design ideal for sterile washdowns

Optional

- available with a wide range of control equipment and accessories
- autoclavable

Technical Data

- control function: pneumatically operated
  DV13A: fail safe close (NC)
  DV13J: fail safe close (NC)
  fail safe open (NO)
  double acting (DA)
  maximum working pressure: unidirectional (delta p=100%)
  DV13A: fail safe close
  EPDM diaphragm 116 PSI (8 BAR)
  PTFE diaphragm 101 PSI, (7 BAR)
  DV13J: fail safe close
  EPDM diaphragm 65 PSI (4.5 BAR)
  PTFE diaphragm 60 PSI (4 BAR)
  fail safe open and double acting
  EPDM diaphragm 116 PSI (8 BAR)
  PTFE diaphragm 101 PSI (7 BAR)
  Higher working pressures may be achieved with a different actuator.
- maximum working temperature: 160°C (320°F) dependent on application
- control pressure:
  NC: DV13A: 60-101 PSI (4-7 BAR)
  NC: DV13J: 80-101 PSI (5.5-7 BAR)
  NO, DA: 80-101 PSI (5.5-7BAR)
- diaphragm material: EPDM or PTFE
- valve body material: forged 1.4435/316L ASME/BPE, investment cast 1.4435/316L, other alloys
- end connection: butt weld ends, clamps, special ends
- actuators suitable for: two-way bodies, welded configurations, T-bodies, multiport bodies, tank bottom bodies
- flow rate: Cv in GPM
- diaphragm size: MA 8 all sizes



DV13A

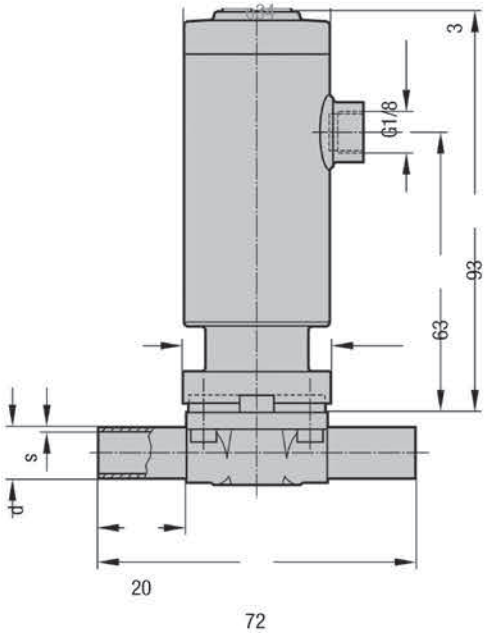

Telephone: **+44 (0)1772 323529** Email: **sales@dixoneurope.co.uk**

DV20 – Pneumatically Operated Valve DN 4-15 mm (¼" - ½")

Features

- efficient thermoplastic piston actuator with stainless steel distance piece
- direction of control air connection is mountable in 90° rotations
- circumferential defined sealing angle between process diaphragm and valve body
- flexible diaphragm suspension
- optical indicator



DV20

Optional

- available with a wide range of control equipment and accessories

Technical Data

- control function: pneumatically operated
  fail safe close (NC)
  fail safe open (NO)
  double acting (DA)
- direction control connection:
  90° to flow direction, standard
  maximum working pressure: unidirectional (delta p=100%)
  EPDM diaphragm 116 PSI (8 BAR)
  PTFE diaphragm 101 PSI, (7 BAR)
  Higher working pressures may be achieved with a different actuator.
- maximum working temperature: 160°C (320°F) dependent on application
- control pressure:
  NC: 60-101 PSI (4-7 BAR)
  NO, DA: 50-65 PSI (3.5-4.5 BAR)
- diaphragm material: EPDM or PTFE
- valve body material: forged 1.4435/316L ASME/BPE, investment cast 1.4435/316L, other alloys
- end connection: butt weld ends, clamps, special ends
- actuators suitable for: two-way bodies, welded configurations, T-bodies, multiport bodies, tank bottom bodies
- flow rate: Cv in GPM
- diaphragm size: MA 8 all sizes

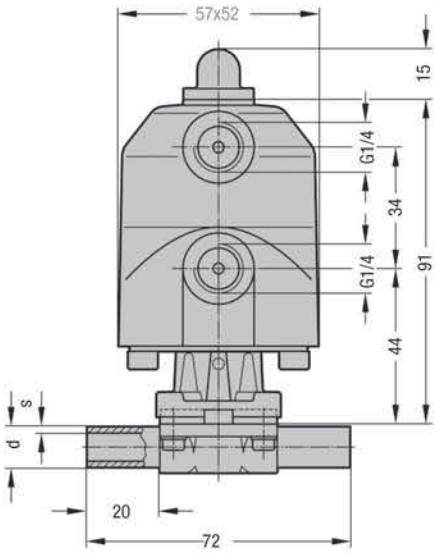

DV23 – Pneumatically Operated Valve DN 8-20 mm (3/8"-3/4")

Features

- high cycle piston stainless steel actuator
- compact design, the outside diameter of the actuator is the same size as the bonnet flange
- available in multiport bodies and manifold valve assemblies
- control air connection in flow direction
- circumferential, defined sealing angle between process diaphragm and valve body
- flexible diaphragm suspension
- encapsulated diaphragm
- clean and polished exterior design ideal for sterile washdowns



DV23

F

Optional

- available with a wide range of control equipment and accessories, also for retrofitting
- control air connection 90° to flow direction
- autoclavable

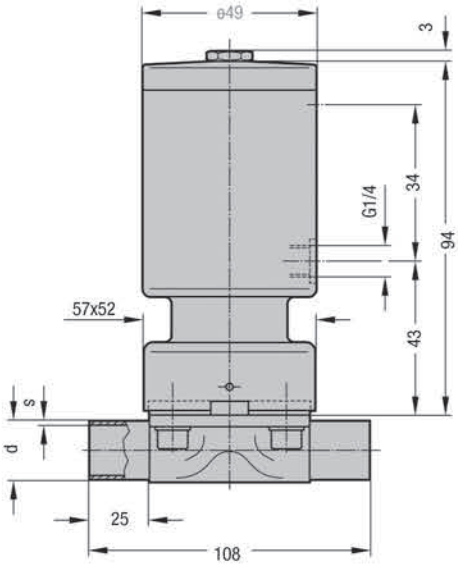

Technical Data

- control function: pneumatically operated
  fail safe close (NC)
  fail safe open (NO)
  double acting (DA)
- direction control connection:
  90° in flow direction, standard
  90° to flow direction, optional
- maximum working pressure: unidirectional (delta p = 100%), EPDM diaphragm 116 PSI (8 BAR), PTFE diaphragm 101 PSI (7 BAR), a higher working pressure may be achieved with a different actuator
- maximum working temperature: 160°C (320°F), dependent on application
- control pressure: NC: 60-101 PSI (4-7 BAR), NO, DA: 60-72 PSI (4-5 BAR)
- diaphragm material: EPDM or PTFE
- valve body material: forged 1.4435/316L ASME/BPE, investment cast 1.4435/316L, other alloys
- end connection: weld ends, clamps, special ends
- actuators suitable for: two-way bodies, welded configurations, T-bodies, multiport bodies, tank bottom bodies
- flow rate: Cv in GPM
- diaphragm size: MA 10 all sizes

Telephone: **+44 (0)1772 323529** Email: **sales@dixoneurope.co.uk**

DV12 (3/8" - 3/4") – Pneumatically Operated Valve DN 8-20mm

Features

- efficient thermoplastic piston actuator with stainless steel distance piece
- control air connection 90° to flow direction
- flexible diaphragm suspension
- encapsulated diaphragm
- optical indicator
- compact design, the outside diameter of the actuator is the same size as the bonnet flange



DV12

Optional

- available with a wide range of control equipment and accessories, also for retrofitting
- control air connection in flow direction

Technical Data

- control function: pneumatically operated
  fail safe close (NC)
  fail safe open (NO)
  double acting (DA)
- direction control connection:
  90° to flow direction, standard
- maximum working pressure: unidirectional (delta p = 100%), EPDM diaphragm 116 PSI (8 BAR), PTFE diaphragm 101 PSI (7 BAR), a higher working pressure may be achieved with a different actuator
- maximum working temperature: 160°C (320°F), dependent on application
- control pressure: NC:, 60-101 PSI (4-7 BAR), NO, DA: 60-72 PSI (4-5 BAR)
- diaphragm material: EPDM or PTFE
- valve body material: forged 1.4435/316L ASME/BPE, investment cast 1.4435/316L, other alloys
- end connection: weld ends, clamps, special ends
- actuators suitable for: two-way bodies, welded configurations, T-bodies, multi port bodies, tank bottom bodies
- flow rate: Cv in GPM
- diaphragm size: MA 10 all sizes

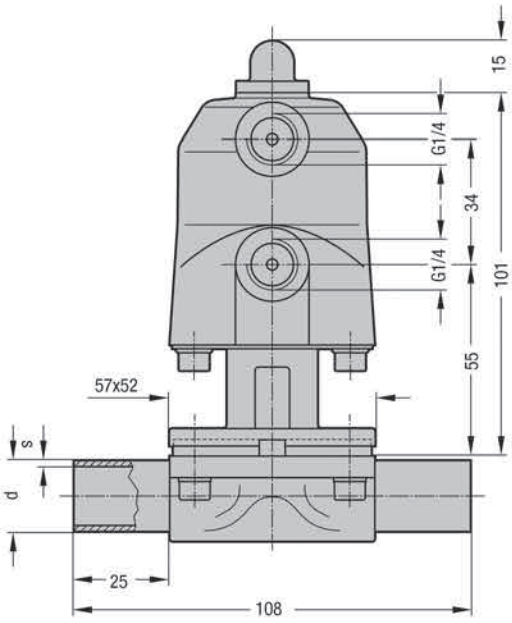

DV14 – Pneumatically Operated Valve DN 8-20 mm (3/8"-3/4")

Features

- efficient thermoplastic piston actuator direct assembled with the valve body
- control air connection 90° to flow direction for side by side or other installations saving space
- compact design, the outside diameter of the actuator is the same size as the bonnet flange
- actuator high resistance to heat transfer
- smooth exterior design ideal for washdowns
- encapsulated diaphragm
- optical indicator



DV14

F

Optional

- available with a wide range of control equipment and accessories, also for retrofitting
- control air connection in flow direction

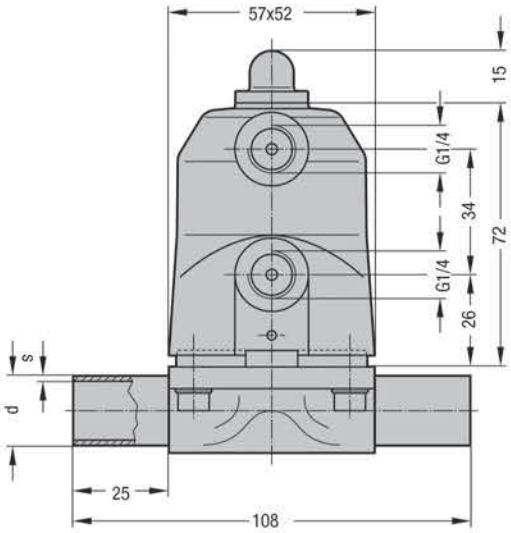

Technical Data

- control function: pneumatically operated
  fail safe close (NC)
  fail safe open (NO)
  double acting (DA)
- direction control connection:
  90° to flow direction, standard
- maximum working pressure: unidirectional (delta p = 100%), EPDM diaphragm 116 PSI (8 BAR), PTFE diaphragm 101 PSI (7 BAR), a higher working pressure may be achieved with a different actuator
- maximum working temperature: 80°C (176°F) standard, 150°C (300°F) HS-version, dependent on application
- control pressure: NC: 60-101 PSI (4-7 BAR), NO, DA: 60-72 PSI (4-5 BAR)
- diaphragm material: EPDM or PTFE
- valve body material: forged 1.4435/316L ASME/BPE, investment cast 1.4435/316L, other alloys
- end connection: weld ends, clamps
  special ends
- actuators suitable for: two-way bodies, welded configurations
- flow rate: Cv in GPM
- diaphragm size: MA 10 all sizes

Telephone: **+44 (0)1772 323529** Email: **sales@dixoneurope.co.uk**

DV21 – Pneumatically Operated Valve DN 15-100 mm (½"-4")

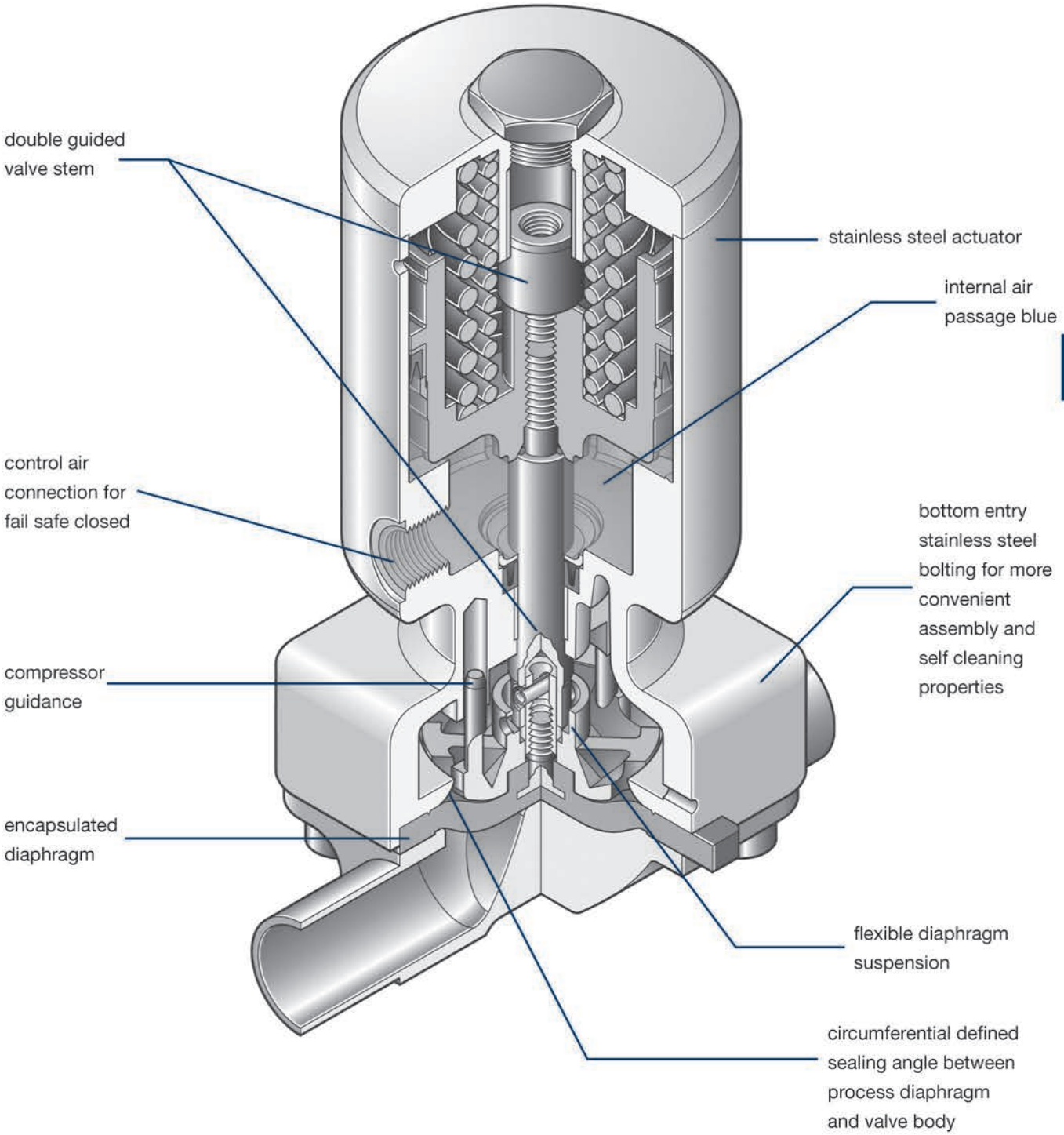

DV21 – Pneumatically Operated Valve DN 15-100 mm (½"-4")

Features

- high cycle piston stainless steel actuator
- compact design, the outside diameter of the actuator is the same size as the bonnet flange
- available in multiport bodies and manifold valve assemblies
- control air connection in flow direction
- circumferential defined sealing angle between process diaphragm and valve body
- flexible diaphragm suspension
- encapsulated diaphragm
- clean and polished exterior design ideal for sterile washdowns

Optional

- available with a wide range of control equipment and accessories, also for retrofitting
- control air connection 90° to flow direction
- autoclavable

Technical Data

- control function: pneumatically operated
  fail safe close (NC)
  fail safe open (NO)
  double acting (DA)
- direction control connection: in flow direction, standard
  90° to flow direction, optional
- maximum working pressure: unidirectional (delta p = 100%), a higher working pressure may be achieved with a different actuator

Diaphragm	DN 15-50 (2")	DN 65-80 (2.5"-3")	DN100 (4")
EPDM	145 PSI (10 BAR)	101 PSI (7 BAR)	87 PSI (6 BAR)
PTFE	116 PSI (8 BAR)	87 PSI (6 BAR)	72 PSI (5 BAR)

- maximum working temperature: 175°C (350°F), dependent on application
- control pressure:
  NC: DN 15-80, 72-116 PSI (5-8 BAR)
  NC: DN100, 87-116 PSI (6-8 BAR)
  NO, DA DN 15-80, 65-87 PSI (4.5-6 BAR)
  NO, DA DN 100, 80-101 PSI (5.5-7 BAR)
- diaphragm material: EPDM or PTFE
- valve body material: forged 1.4435/316L ASME/BPE, investment cast 1.4435/316L, other alloys
- end connection: weld ends, special ends
- actuators suitable for: two-way bodies, welded configurations, T-bodies, multiport bodies and tank bottom bodies
- flow rate: Cv in GPM
- diaphragm size: MA see table below

DN (mm)	DIMENSIONS (mm)							
	MA	L	L_1	A x B	H_1	H_2	H_3	D
15-25	25	25	120	73x79	146	66	133	75
32-40	40	25	153	96x105	180	75	160	105
50	50	30	173	111x130	216	77	180	105
65	80	30	216	190x170	309	135	285	175
80	80	30	254	190x170	309	135	285	175
100	100	30	305	Φ238	318	143	295	175



DV21

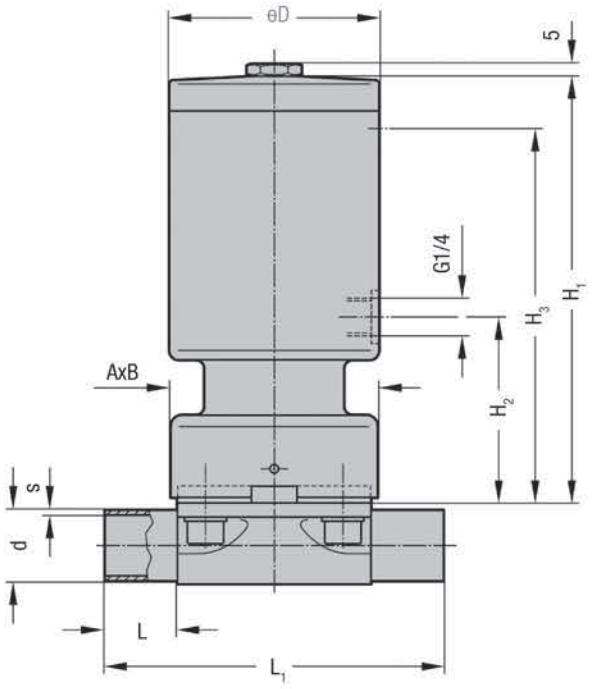

Telephone: **+44 (0)1772 323529** Email: **sales@dixoneurope.co.uk**

DV12 (1/2" - 4") – Pneumatically Operated Valve DN 15-100 mm

Features

- thermoplastic diaphragm actuator with stainless steel distance piece
- control air connection 90° to flow direction
- flexible diaphragm suspension
- encapsulated diaphragm

Optional

- available with a wide range of control equipment and accessories, also for retrofitting

Technical Data

- control function: pneumatically operated
  fail safe close (NC)
  fail safe open (NO)
  double acting (DA)
- direction control connection: 90° to flow direction, standard
- maximum working pressure: unidirectional (delta p = 100%), a higher working pressure may be achieved with a different actuator

Diaphragm	DN 15-50 (2")	DN 65-80 (2.5"-3")	DN100 (4")
EPDM	145 PSI (10 BAR)	101 PSI (7 BAR)	87 PSI (6 BAR)
PTFE	116 PSI (8 BAR)	87 PSI (6 BAR)	72 PSI (5 BAR)

- maximum working temperature: 175°C (350°F), dependent on application
- control pressure:
  - NC: DN 15-50, 65-87 PSI (4.5-6 BAR)
  - NC: DN 65-80, 65-101 PSI (4.5-7 BAR)
  - NC: DN 100, 80-101 PSI (5.5-7 BAR)
  - NO, DA DN 15-80, 60-80 PSI (4-5.5 BAR)
  - NO, DA DN 100, 72-93 PSI (5-6.5 BAR)
- diaphragm material: EPDM or PTFE
- valve body material: forged 1.4435/316L ASME/BPE, investment cast 1.4435/316L, other alloys
- end connection: weld ends, clamps, special ends
- actuators suitable for: two-way bodies, welded configurations, T bodies, multi port bodies, tank bottom bodies
- flow rate: Cv in GPM
- diaphragm size: MA see table below



DV12

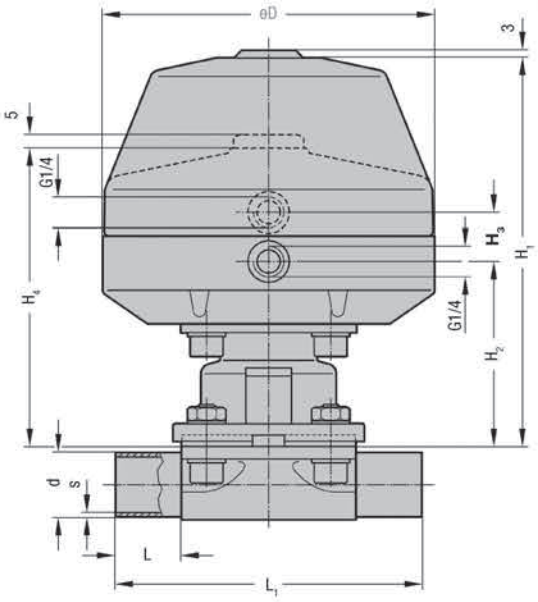

DN (mm)	DIMENSIONS (mm)							
	MA	L	L_1	H_1	H_2	H_3	H_4	D
15-25	25	25	120	148	71	31	120	130
32-40	40	25	153	194	95	31	144	161
50	50	30	173	233	109	31	177	217
65	80	30	216	314	166	41	275	265
80	80	30	254	314	166	41	275	265
100	100	30	305	314	166	41	284	265

DV15 – Pneumatically Operated Valve DN 15-100 mm (½"-3")

Features

- thermoplastic diaphragm actuator direct assembled with the valve body
- actuator high resistance to heat transfer
- smooth exterior design ideal for washdowns
- control air connection 90° to flow direction
- flexible diaphragm suspension
- encapsulated diaphragm

Optional

- available with a wide range of control equipment and accessories, also for retrofitting



DV15

F

Technical Data

- control function: pneumatically operated
  fail safe close (NC)
  fail safe open (NO)
  double acting (DA)
- direction control connection:
  90° to flow direction, standard
- maximum working pressure: unidirectional (delta p = 100%), a higher working pressure may be achieved with a different actuator

Diaphragm	DN 15-50 (2")	DN 65-80 (2.5"-3")	DN100 (4")
EPDM	145 PSI (10 BAR)	101 PSI (7 BAR)	87 PSI (6 BAR)
PTFE	116 PSI (8 BAR)	87 PSI (6 BAR)	72 PSI (5 BAR)

- maximum working temperature: 80°C (176°F)
- control pressure:
  NC: DN 15-50, 65-87 PSI (4.5-6 BAR)
  NC: DN 65-80, 65-101 PSI (4.5-7 BAR)
  NO, DA DN 15-80, 60-80 PSI (4-5.5 BAR)
- diaphragm material: EPDM or PTFE
- valve body material: forged 1.4435/316L ASME/BPE, investment cast 1.4435/316L, other alloys
- end connection: weld ends, clamps, special ends
- actuators suitable for: two-way bodies, welded configurations
- flow rate: Cv in GPM
- diaphragm size: MA see table below

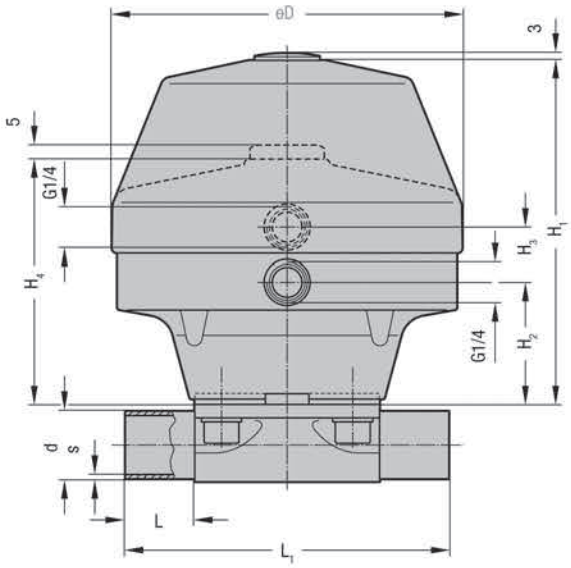

DN (mm)	DIMENSIONS (mm)							
	MA	L	L_1	H_1	H_2	H_3	H_4	D
15-25	25	25	120	153	49	31	97	130
32-40	40	25	153	176	77	31	131	161
50	50	30	173	214	91	31	161	217
65	80	30	216	269	121	41	229	265
80	80	30	254	269	121	41	229	265

Telephone: **+44 (0)1772 323529** Email: **sales@dixoneurope.co.uk**

DV16 – Pneumatically Operated Valve DN 15-50 mm (½"-2")

Features

- thermoplastic piston actuator
- compact design
- actuator high resistance to heat transfer
- control air connection in flow direction
- circumferential defined sealing angle between process diaphragm and valve body
- flexible diaphragm suspension
- encapsulated diaphragm
- smooth exterior design ideal for washdowns



DV16

Optional

- available with a wide range of control equipment and accessories, also for retrofitting
- control air connection 90° to flow direction

Technical Data

- control function: pneumatically operated
  fail safe close (NC)
  fail safe open (NO)
  double acting (DA)
- direction control connection:
  in flow direction, standard
  90° to flow direction, optional
- maximum working pressure: unidirectional (delta p = 100%), EPDM diaphragm, 145 PSI (10 BAR), PTFE diaphragm, 116 PSI (8 BAR), a higher working pressure may be achieved with a different actuator.
- maximum working temperature: HS-version 150°C (300°F), dependent on application
- control pressure:
  NC 65-101 PSI (4.5-7 BAR)
  NO, DA 60-72 PSI (4-5 BAR)
- diaphragm material: EPDM or PTFE
- valve body material: forged 1.4435/316L ASME/BPE, investment cast 1.4435/316L, other alloys
- end connection: weld ends, clamps, special ends
- actuators suitable for: two-way bodies, welded configurations
- flow rate: Cv in GPM
- diaphragm size: MA see table below

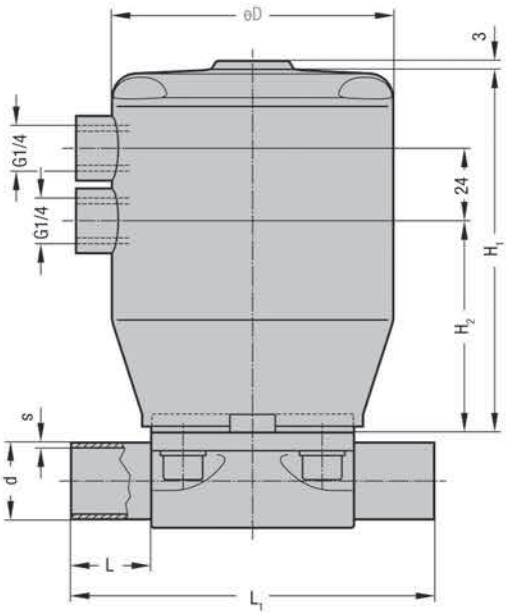

DN (mm)	DIMENSIONS (mm)					
	MA	L	L_1	H_1	H_2	D
15-25	25	25	120	120	70	92
32-40	40	25	153	133	75	112
50	50	30	173	173	111	143

DV24 – Pneumatically Operated Valve DN 15-50 mm (½"-2")

Features

- two stage stainless steel actuator
- second position adjustable with reduced flow for filling
- compact design, the outside diameter of the actuator is the same size as the bonnet flange
- available in multi port bodies and manifold valve assemblies
- control air connection in flow direction
- circumferential defined sealing angle between process diaphragm and valve body
- flexible diaphragm suspension
- encapsulated diaphragm
- clean and polished exterior design ideal for sterile washdowns
- optical indicator

Optional

- available with a wide range of control equipment and accessories, also for retrofitting
- control air connection 90° to flow direction
- autoclavable

Technical Data

- control function: pneumatically operated
  fail safe close (NC)
- direction control connection:
  in flow direction, standard
  90° to flow direction, optional
- maximum working pressure: unidirectional (delta p = 100%), EPDM diaphragm, 145 PSI (10 BAR), PTFE diaphragm, 116 PSI (8 BAR), a higher working pressure may be achieved with a different actuator.
- maximum working temperature: 160°C (320°F), dependent on application
- control pressure:
  NC: 72-116 PSI (5-8 BAR)
- diaphragm material: EPDM or PTFE
- valve body material: forged 1.4435/316L ASME/BPE, investment cast 1.4435/316L, other alloys
- end connection: weld ends, clamps, special ends
- actuators suitable for: two-way bodies, welded configurations, T-bodies, multiport bodies, tank bottom bodies
- flow rate: Cv in GPM
- diaphragm size: MA see table below



DV24

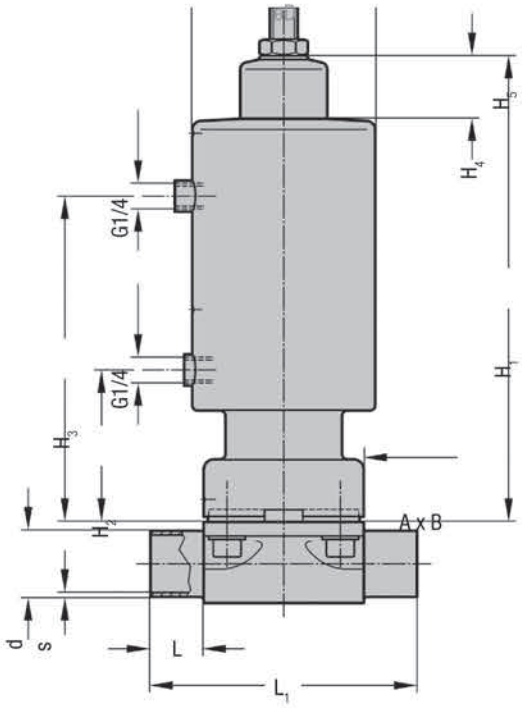

DN (mm)	DIMENSIONS (mm)									
	MA	L	L_1	A x B	H_1	H_2	H_3	H_4	H_5	D
15-25	25	25	120	73x79	220	66	150	-	35	75
32-40	40	25	153	96x105	250	75	185	28	40	105
50	50	30	173	111x130	294	77	221	28	47	105

Telephone: **+44 (0)1772 323529** Email: **sales@dixoneurope.co.uk**

Welded Valve Configurations

The main valve orientation distinguishes between the two different principles:

SL or GMP

The SL Fabrication is utilised in a vertical piping system to eliminate dead legs in point of use applications of high purity water systems or any other distribution systems. This valve design serves as a 90° elbow for the piping system or as a valve by valve configuration. In a valve by valve configuration the horizontal valve is orientated at the self-draining angle. When the vertical main valve is opened it provides a sample untainted by bacterial growth or process contamination. Available in sizes up to DN 100 (4") for both the main valve and the L valve or tube port. Refer to the following illustrations for possible combinations.

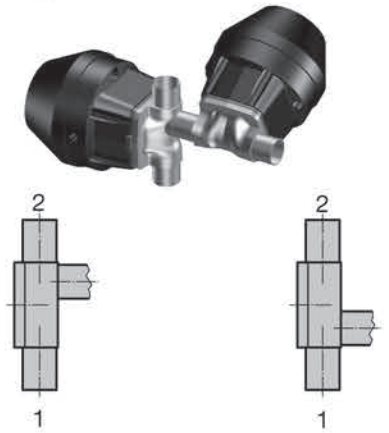

SA or SAP

The Sterile Access Fabrication is utilised in a horizontal piping system where the main valve is orientated at the self-draining angle and the access port is at the lowest drainable point of the waterway. The sterile access may be used for applications including sampling, steam, condensate or as a divert port. The Sterile Access Fabrication is available with either a tube port or a vertical or horizontal valve port. Available in sizes up to DN 100 (4") for both the main valve and access valve or tube port. Refer to the following illustrations for possible combinations.

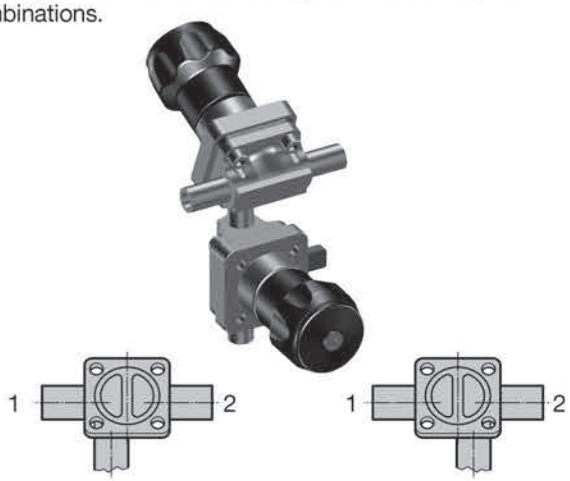

SL - L Pattern Configurations


SL2.1.V


SL1.1.V


SL2.2.V


SL1.2.V


SL2.1.H


SL1.1.H


SL2.2.H


SL1.2.H

SA - Sterile Access Configurations


SA1.1.V


SA2.1.V


SA1.2.V


SA2.2.V


SA1.1.H


SA2.1.H


SA1.2.H


SA2.2.H

Multiport Valves

Multiport valves up to size DN100 (4") and larger nominal diameters and nominal diameter combinations are available. Within this range, all tube standards, tube end orientations and other application specific customized blocks can be specified.

Example Drawing Multiport Block Valve with Main Line Open

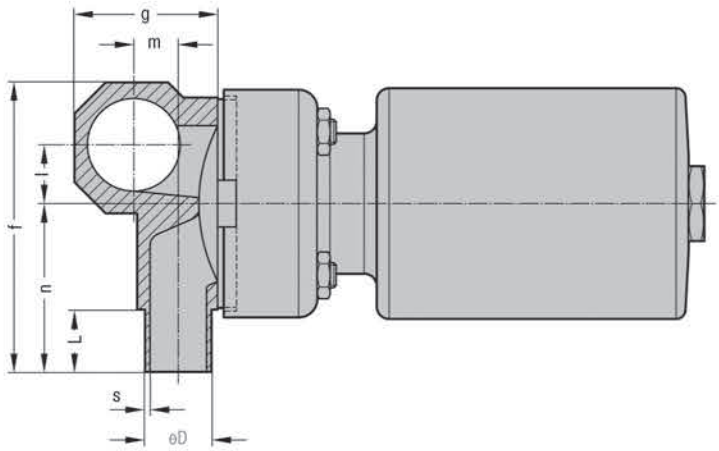

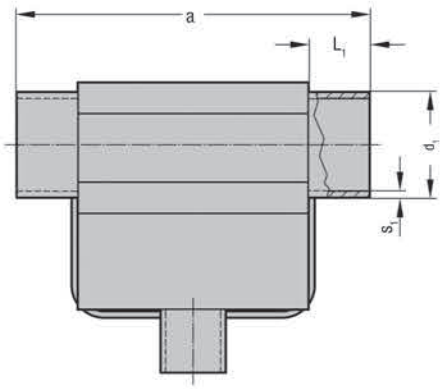



Fig. 1



Fig. 2



Fig. 3



Fig. 4

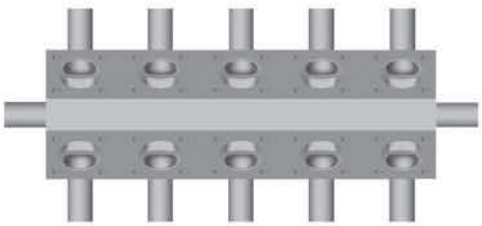

Fig. 5



Fig. 6

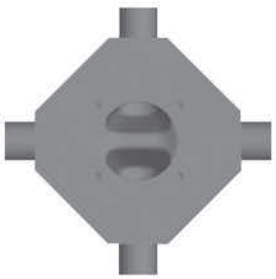

Fig. 7



Fig. 8



Fig. 9

Telephone: **+44 (0)1772 323529**

Email: **sales@dixoneurope.co.uk**

Tank Bottom Valves

The tank bottom valve is designed for applications in the aseptic process industry offering a pocket-free interior surface, minimised sump, eliminating entrapment areas and minimising flow resistance thus reducing the potential for process contamination. The tank bottom valve incorporates the same features and performance of a standard diaphragm valve utilising the same valve components for a flush mounted tank bottom valve or side mounted tank and sample valve.

The tank valve body is machined as standard from solid bar stock material 1.4435/316L ASME BPE and other alloy materials are available according to the specification. The standard design offers one valve port outlet. There are a number of different options available for sampling, sterilisation and multi-outlet configurations that are standard in the product range of customized solutions.

It is preferred to weld in the tank valve directly in the vessel. Mounting the valve directly to the tank minimises the hold up volume, the most important criteria for this application. If removal of the tank valve from the tank is required, versions are offered with flange or clamp connections.

Tank bottom valves are typically used for tank discharge, draining, sampling, cleaning and/or Sterilising, rinsing and isolation of down stream processing.

The outlet port of the tank valve is available with all weld tube end standards, aseptic clamp or other special ends. The size range available is the same as the two-way valve.

Features

- tank body machined from a solid bar stock material
- material 1.4435/316L ASME BPE
- other alloy options available as specified
- minimised dead leg and internal sump
- optional manual operation via an extended crankshaft stem

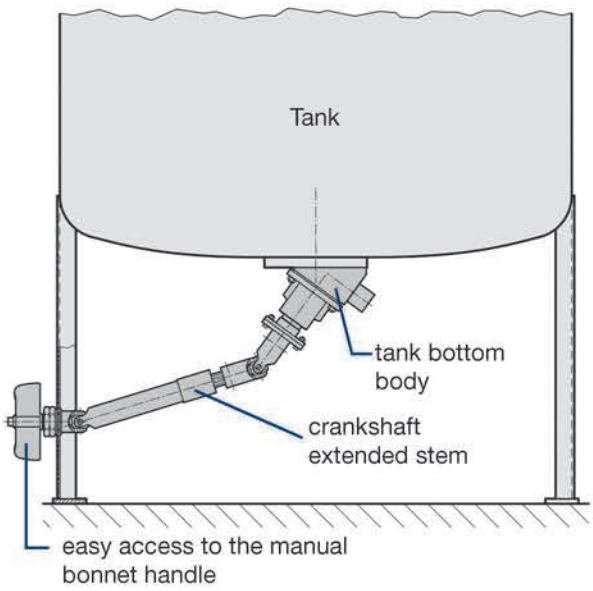

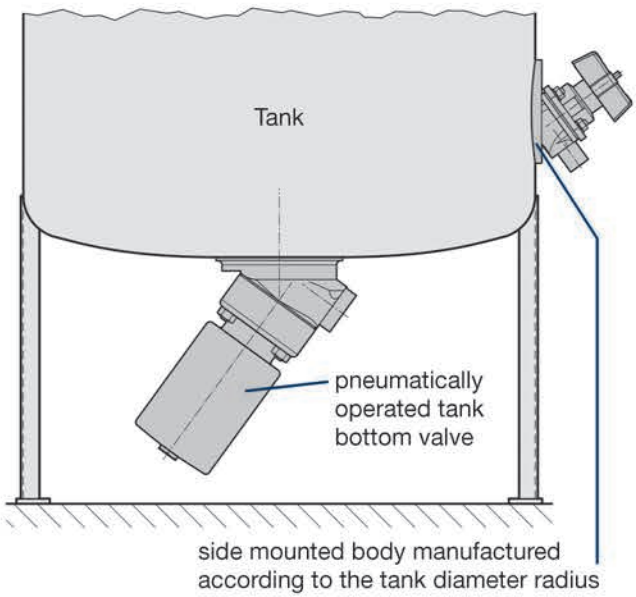



manual



pneumatically operated



manual



pneumatically operated

Tank Bottom Valves

Example Drawing: Pneumaticaly Operated

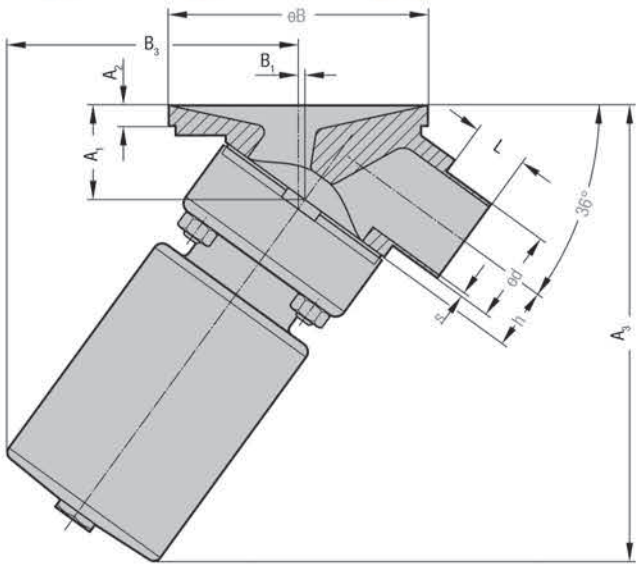

Example Drawing: Manually Operated

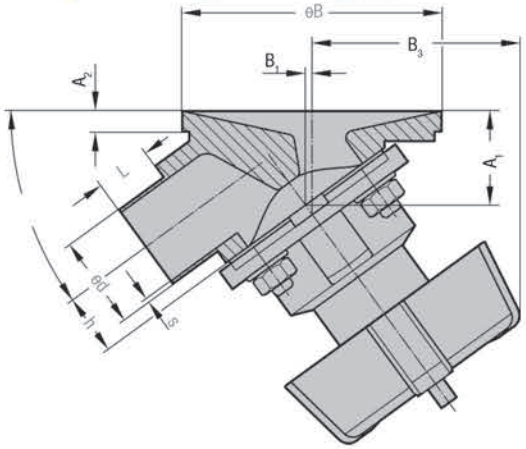

F

The following page show examples of standard and customized designs of tank diaphragm valves. These include options for sampling, sterilisation and multi-outlet configurations.



Position One: 1x Valve Port

- standard tank bottom body
- tank body for the tank bottom

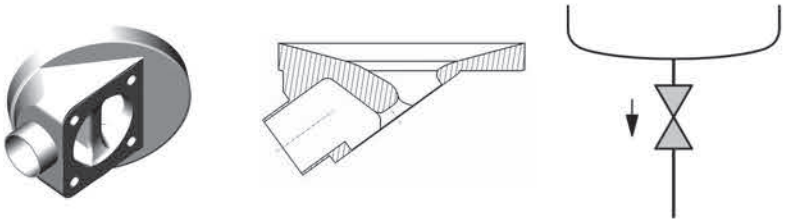

Position Two: 1x Valve Machined From Bar Stock

- 3/1 with one welded valve, tank side left
- 3/1 with one welded valve, tank side right
- 3/1 with one welded valve, outlet left
- 3/1 with one welded valve, outlet right
- 4/1 with one welded valve, tank side left and one welded valve, outlet right

Note: For all options the welded valve is rotated into the self-draining position and extended to eliminate interference with the tank bottom.



Position Three: 3/2

- 1x main valve
- 1x sample valve, tank side right

Note: Like position two but includes an integral sample valve tank side. Right side and left side options are available and are fully drainable.



Telephone: **+44 (0)1772 323529** Email: **sales@dixoneurope.co.uk**

Tank Bottom Valves



Position Four: 3/2

- 1x main valve
- 1x sample valve, outlet left

Note: Like position two but includes an integral outlet valve. Right side and left side options are available and are fully drainable.

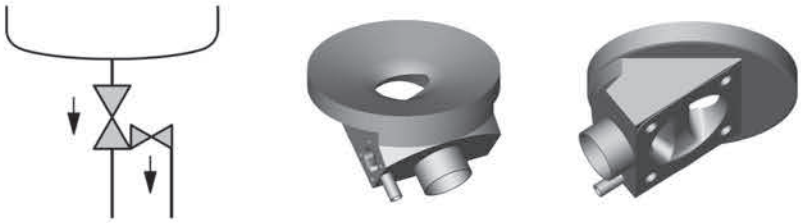

Position Five: 4/3

- 1x main valve
- 1x sample valve, tank side right
- 1x CIP / SIP cleaning outlet, valve left

Note: Like position two but includes an integral valves that are fully drainable.



Position Six: 3/1

- 1x main valve
- 2x outlet port for loop installation or as two access ports



Position Seven: 5/4

- 4x main valves
- 1x port

Note: Application with four internal tank partitions.



F

System Components and Accessories

Manual Adjustment - Optical Indication

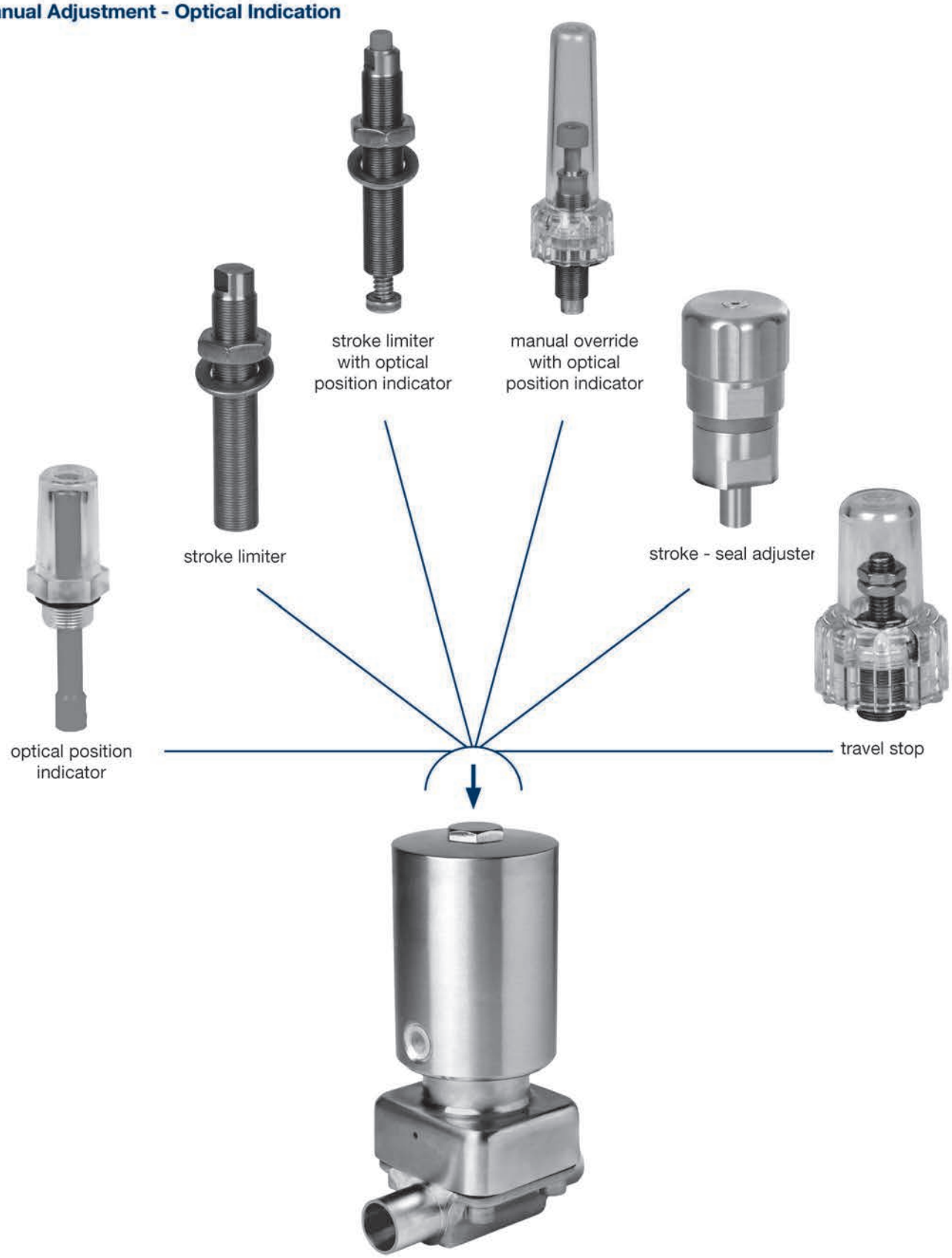

• Combination of manual adjustments with switch boxes are available upon request

Telephone: **+44 (0)1772 323529**
Email: **sales@dixoneurope.co.uk**

System Components and Accessories

Electrical Switch Boxes - Pilot Control

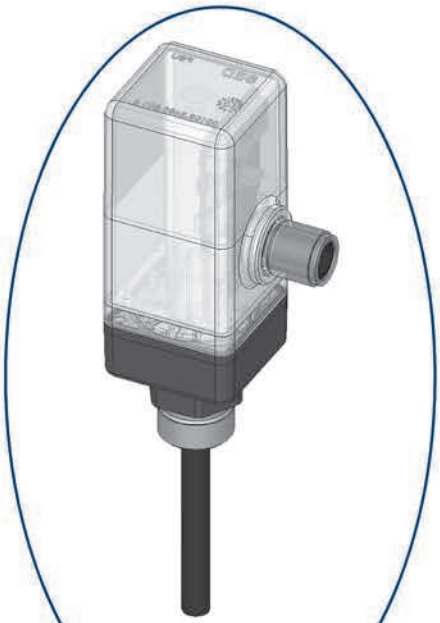

contact-free
limit switch



limit switch
open position



control head switch for
open and close with optical
indicator

as-interface control head
switch for open and close
position with optical
indicator



pilot valve for
manifold mounting



pilot valve for
direct mounting



• Combination of manual adjustments with switch boxes are available upon request

Diaphragm Valve Check List

Contact Name: _____ Company Name: _____

Date: _____ Phone _____ Email: _____

Customer ID#: _____

PROCESS BACKGROUND

Process Temp: _____ Plant Air Supply (PSI): _____

Product _____ Auroclavable: Yes ☐ No ☐

Plant Air Supply (PSI) _____

BODY

Forged: ☐ Cast: ☐ Other: _____

BONNET

Thermoplastic: ☐ Stainless Steel: ☐

ACTUATION

Thermoplastic: ☐ Stainless Steel: ☐

Manual Handwheel: ☐ Pneumatic SR: ☐ Pneumatic DA: ☐

No: ☐ NC: ☐

SIZE

1/4" ☐ 3/8" ☐ 1/2" ☐ 3/4" ☐ 1" ☐ 2" ☐ 3" ☐ 4" ☐ 6" ☐ Other ☐

SURFACE FINISH

SF1 ☐ SF2 ☐ SF3 ☐ SF4 ☐

SF5 ☐ SF6 ☐

CONNECTION

Clamp x Clamp ☐ Weld x Weld ☐

Other: _____

VISUAL INDICATION

with 30° V-port ☐

Other: _____

OPTIONS

SPECIAL INSTRUCTIONS (BODY CONFIGURATIONS)

Sight Glasses

Product Specifications

Size range:
- 1" - 6" OD

Materials:
- 316L stainless steel
- Borosilicate glass

Finish:
- 3A sanitary finish ID and OD

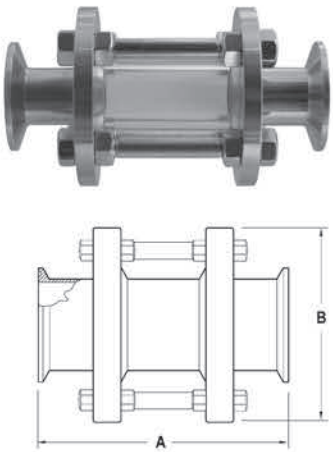

IN-LINE SIGHT GLASS - B54BMP				
PART NO.	TUBE OD	A	B	WORKING PRESSURE
B54BMP-R100	1"	5.625	3.250	145
B54BMP-R150	1½"	5.625	4.000	145
B54BMP-R200	2"	5.625	4.250	145
B54BMP-R250	2½"	6.125	4.750	120
B54BMP-R300	3"	7.250	5.500	120
B54BMP-R400	4"	7.375	6.500	95
B54BMP-R600	6"	7.625	9.500	80

- made with borosilicate (Pyrex®) glass with white buna gaskets
- various end configurations are available: clamp, weld, RJT, DIN, IDF, SMS
- maximum temperature: 93°C (200°F)

G

KITS AND REPLACEMENT PARTS					
SIZE	SEAL KIT PART NUMBER	REPLACEMENT GLASS PART NUMBER	SIZE	SEAL KIT PART NUMBER	REPLACEMENT GLASS PART NUMBER
1"	B54BMP-SK100	B54G-P100	3"	B54BMP-SK300	B54G-P300
1½"	B54BMP-SK150	B54G-P150	4"	B54BMP-SK400	B54G-P400
2"	B54BMP-SK200	B54G-P200	6"	B54BMP-SK600	B54G-P600
2½"	B54BMP-SK250	B54G-P250			

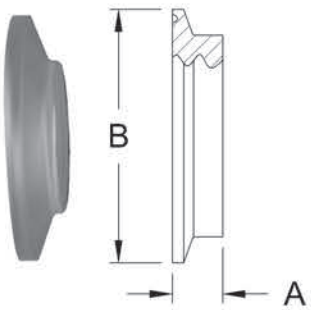

END CAPS – B5416MP			
PART NO.	TUBE OD	DIMENSIONS	
		A	B
B5416MP-A100150	1½	0.438	1.984
B5416MP-A200	2	0.438	2.516
B5416MP-A250	2½	0.438	3.047
B5416MP-A300	3	0.438	3.579
B5416MP-A400	4	0.438	4.682
B5416MP-A600	6	0.438	6.562

- For use on any line with a clamp and gasket
- Acrylic plastic
- Maximum temperature: 66°C (150°F)
- Maximum operating pressure: 100 PSI

Pipe Hangers

Support Recommendations

- Lines are not to be rigidly anchored to equipment. Lines must be allowed to float. Temperatures cause expansion and contraction and if mounted incorrectly will cause distortion and possibly leakage.

- Proper Installation:
  - Straight sections need support every 10 feet / 3 metres
  - Each side of every valve (as close as possible to the connection) needs support
  - Support at each change of direction

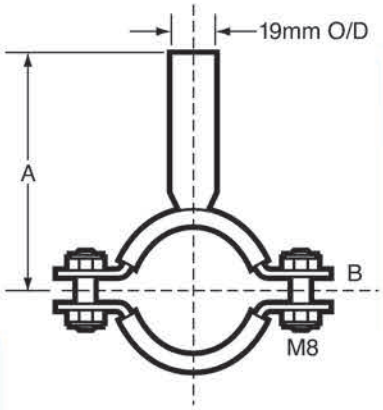

SADDLE CLIP

Part No	Size	A	B
B24DB-G050	½"	90	3
B24DB-G100	1"	90	3
B24DB-G150	1½"	90	3
B24DB-G200	2"	90	3
B24DB-G250	2½"	90	3
B24DB-G300	3"	90	3
B24DB-G400	4"	90	3

G

BLOCK STYLE TUBE HANGERS - B24



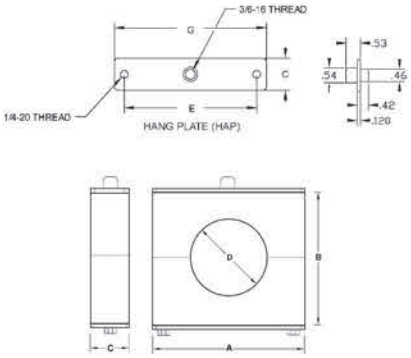



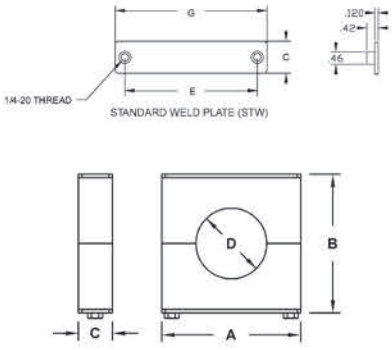

HANG PLATE DESIGN								WELD PLATE DESIGN			
TUBE O.D.	DIMENSIONS A	B	C	D	E	F	G	HANG PLATE Polypropylene Number	STANDARD WELD PLATE Polypropylene Number	HANG PLATE Santoprene Number	STANDARD WELD PLATE Santoprene Number
½"	47.75	35.05	30.23	33.02	52.32	50.29	88.90	B24PPHAP-G50	B24PPSTW-G50	B24SPHAP-G50	B24SPSTW-G50
¾"	47.75	35.05	30.23	33.02	52.32	50.29	88.90	B24PPHAP-G75	B24PPSTW-G75	B24SPHAP-G75	B24SPSTW-G75
1"	84.84	66.80	30.23	66.04	85.60	88.14	123.95	B24PPHAP-G100	B24PPSTW-G100	B24SPHAP-G100	B24SPSTW-G100
1½"	84.84	66.80	30.23	66.04	85.60	88.14	123.95	B24PPHAP-G150	B24PPSTW-G150	B24SPHAP-G150	B24SPSTW-G150
2"	84.84	66.80	30.23	66.04	85.60	88.14	123.95	B24PPHAP-G200	B24PPSTW-G200	B24SPHAP-G200	B24SPSTW-G200
2½"	127.00	111.25	30.23	107.95	127.76	139.70	165.10	B24PPHAP-G250	B24PPSTW-G250	B24SPHAP-G250	B24SPSTW-G250
3"	127.00	111.25	30.23	107.95	127.76	139.70	165.10	B24PPHAP-G300	B24PPSTW-G300	B24SPHAP-G300	B24SPSTW-G300
4"	146.56	121.92	30.23	125.73	146.56	146.05	165.10	B24PPHAP-G400	B24PPSTW-G400	B24SPHAP-G400	B24SPSTW-G400

- Santoprene - FDA approved material, maximum temperature 302°F (SP) / 150°C
- Polypropylene - maximum temperature 212°F (PP) / 100°C

Telephone: **+44 (0)1772 323529** Email: **sales@dixoneurope.co.uk**

Hygienic Pressure Gauges

Full Range of Diaphragm Pressure Gauges. Stainless Steel construction filled with a FDA compliant, non-toxic gel media.

Used in Food, Pharmaceutical and Chemical applications.

Features: 100 mm (4") Gauge as standard. Other sizes available. Temperature compensated between -12 and 120°C. Accurate to + or – 1 % full-scale deflection. All Gauges supplied with a calibration certificate.

Diaphragm seal can be supplied with "wetted" or media contact parts in Stainless Steel, Hastelloy®, Monel® etc.
For specific applications, price and availability, please contact Dixon.







Connections / Fittings: RJT, IDF, DIN, SMS, CLAMP.
Call us for other connections.

Spray Balls

Product Specifications

Size range: • ¾" and 1½" NPT • 1" and 1½" OD tube • 1½" clamp

Materials: • 304 stainless steel • 316L stainless steel

Finish: • 3A mirror-like finish (ID/OD)



ROTATING SPRAY BALLS - SRH

304 STAINLESS STEEL PRODUCT NUMBER	316L STAINLESS STEEL PRODUCT NUMBER	SIZE	TYPE	A	B
SRH360NPT-G075	---	¾"	NPT	¾" NPT	5.46
---	SRH360NPT-R150	1½"	NPT	1½" NPT	5.46
SRH360CMP-G150	SRH360CMP-R150	1½"	Clamp	1.984	5.46

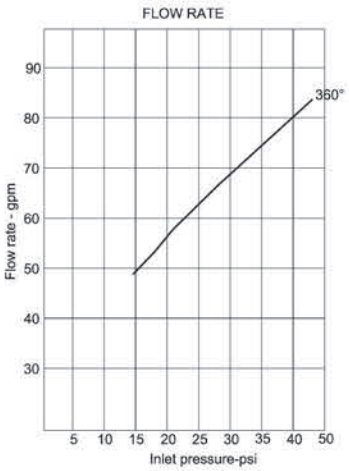

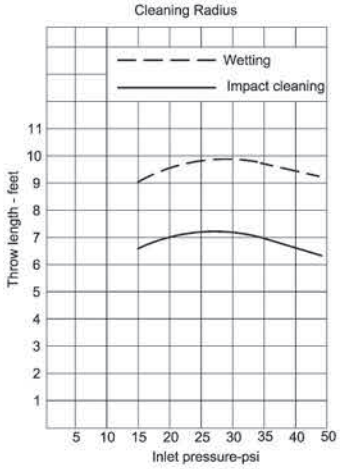

G

- 304 / 316L stainless steel
- stainless steel ball bearings to eliminate rust
- ideal for cleaning all types of tanks and vessels
- cleaning solution used to lubricate unit
- connections available: clamp and NPT RJT, SMS, DIN, IDF
- mirror-like finish (ID/OD)
- spray pattern: 360°



STATIONARY SPRAY BALLS - STC

304 STAINLESS STEEL PRODUCT NUMBER	SIZE	SPRAY PATTERN	A	B	C
STC-360-R100	1"	360°	3.04	2.45	1.005
STC-360-R150	1½"	360°	3.54	2.95	1.505
STC-180B-R100	1"	180° bottom	3.54	2.95	1.005
STC-180B-R150	1½"	180° bottom	3.54	2.95	1.505
STC-180T-R100	1"	180° top	3.54	2.95	1.005
STC-180T-R150	1½"	180° top	3.54	2.95	1.505

- various spray patterns available, (blanks available as special order)
- stationary - designed to be mounted to a tube or pipe

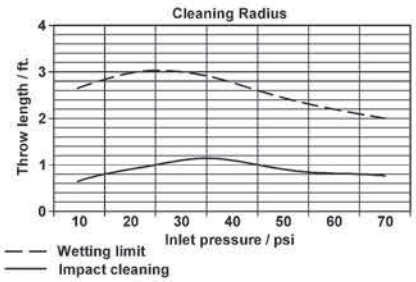

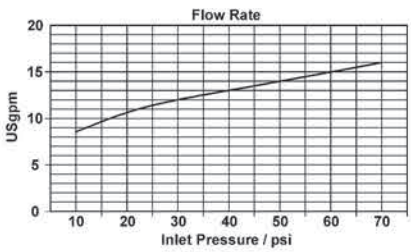

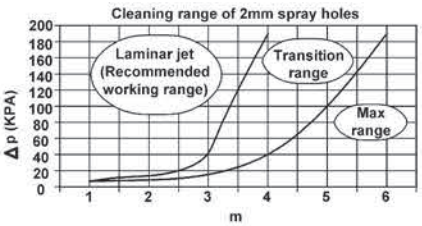

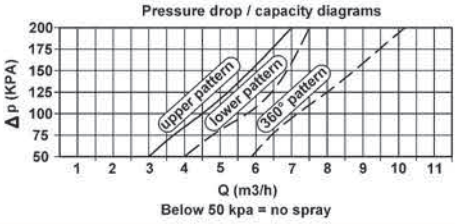

Telephone: **+44 (0)1772 323529** Email: **sales@dixoneurope.co.uk**

Swivels

Product Specifications

Size range:
- 1" - 4" Tube OD

Materials:
- 316L stainless steel

Finish:
- sanitary finish ID and OD

Other:
- available in clamp and weld configurations (RJT, DIN, SMS and IDF)
- elastomers: silicone and PTFE
- optional elastomers available

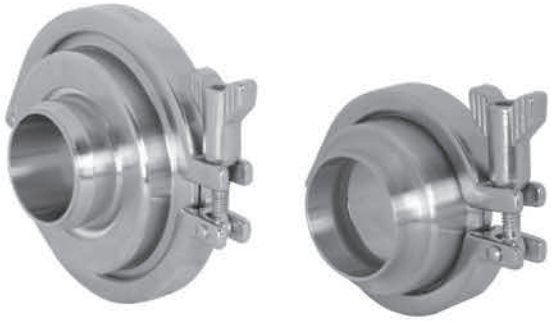

PRESSURE RATINGS (STRAIGHT SWIVELS ONLY)		
SIZE	**PSI AT 21°C (70°F)**	**PSI AT 121°C (250°F)**
1"	500	300
1½"	500	300
2"	450	250
2½"	400	200
3"	350	175
4"	300	150

G

Straight Swivel - SJSS

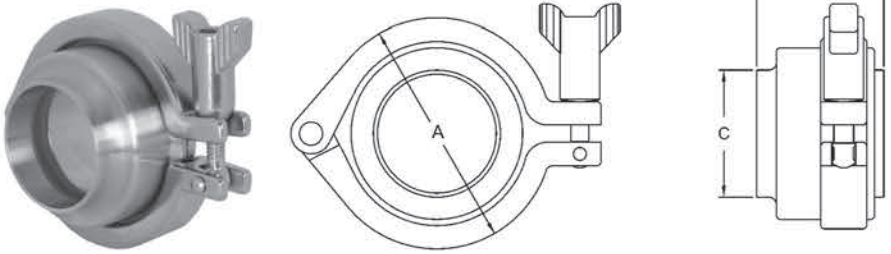

STRAIGHT CLAMP DIMENSIONS - STYLE 20				
PART NO.	**SIZE**	**A**	**B**	**C**
SJSS100CC-20	1.00	2.56	3.00	1.00
SJSS150CC-20	1.50	2.56	3.00	1.50
SJSS200CC-20	2.00	3.09	3.00	2.00
SJSS250CC-20	2.50	3.44	3.00	2.50
SJSS300CC-20	3.00	3.94	3.00	3.00
SJSS400CC-20	4.00	5.08	5.19	4.00

STRAIGHT WELD CONNECTION DIMENSIONS - STYLE 20				
PART NO.	**SIZE**	**A**	**B**	**C**
SJSS100BB-20	1.00	2.56	2.00	1.00
SJSS150BB-20	1.50	2.56	2.00	1.50
SJSS200BB-20	2.00	3.09	2.00	2.00
SJSS250BB-20	2.50	3.44	2.00	2.50
SJSS300BB-20	3.00	3.94	2.00	3.00
SJSS400BB-20	4.00	5.08	2.94	4.00

All dimensions are in inches unless otherwise noted. Engineering dimensions are available upon request. Specifications are subject to change without notice.

Check Valves

Size range: 1/2" - 4" O.D. (12-100mm)

Materials: R=316L

Contact Dixon for price and availability.

Maintaining the standard.

The Hygienic Standard was created by the dairy industry as a voluntary benchmark for product performance and hygienic safety.

Our products have earned the 3A symbol, which requires an annual assessment to make certain each product conforms in all respects to the published standard. Dixon check valves carrying the symbol conform to the hygienic standards for fittings for milk and milk products. Dixon is proud to be a participant in the 3A program.



A variety of industries have trusted Dixon hygienic check valves for many years. Dixon check valves feature quick-disconnect clamp ends for quick and easy cleaning (RJT, DIN, SMS, IDF ends available). Check valves are used for hygienic, as well as industrial applications, to prevent backflow.

- Spring check valves are designed to prevent reverse flow. Concentric valves are available in 1/2" - 4"
- Ball check valves are used where full flow and low pressure drop of product during processing is required. When the flow of product is reversed, the PTFE ball rolls back and seats, thus preventing backflow. Sizes are available from 1 1/2" - 3"
- Air blow check valves are used to clear lines of CIP solutions or other products. Sizes are available from 1" - 4"

Spring Check Valves

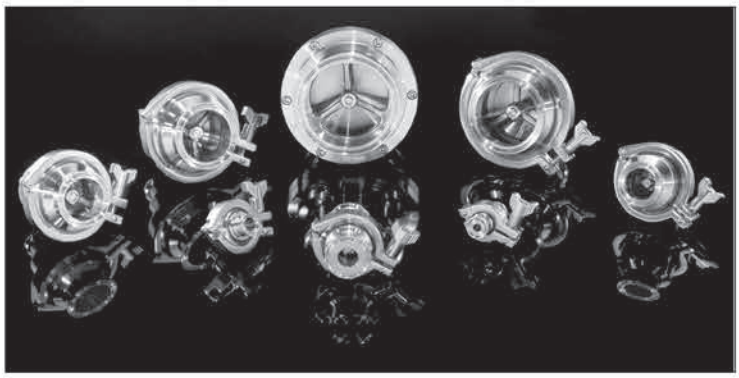

Get control with Dixon's high quality spring check valves. Spring check valves meet all 3A requirements and are designed to prevent reverse flow.

The valve opens once the pressure below the valve seat exceeds the pressure above the valve seat. It closes when the pressure is equalised.

- CF-8M (316) stainless steel
- EPDM Seats (Viton® and Buna available on request)
- Various end configurations available
- Full size flow plate with a long bushing helps to minimise stem wear
- Specially designed to prevent even low-pressure leak-through
- Maximum operating pressure: 145 psi
- Operating temperature range: 20°C (68°F) to 100°C (200°F)

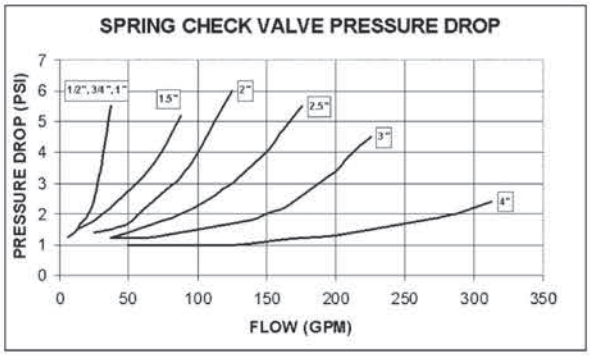

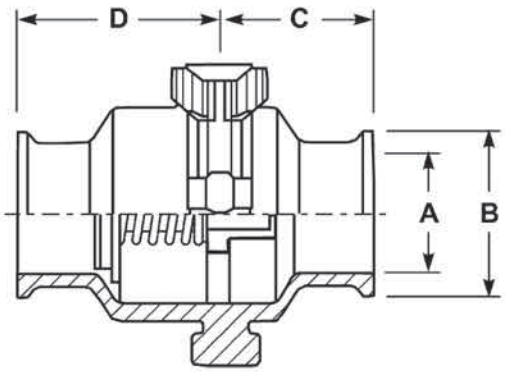

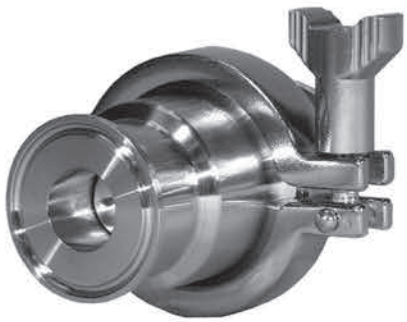

PART NO.	SIZE	DIMENSIONS (inches)				PRESSURE RATING (PSI)	CRACKING PRESSURE (PSI)		FLOW COEFFICIENT (CV)
		A	B	C	D		SPRING #1	SPRING #2	
B46MP-R50	1/2"	0.370	0.992	1.1	1.6	145	10	0.6	5
B46MP-R75	3/4"	0.620	0.992	1.1	1.6	145	4	2	8
B46MP-R100	1"	0.870	1.988	1.7	2.3	145	0.8	N/A	12
B46MP-R150	1 1/2"	1.370	1.988	1.7	2.3	145	1.6	N/A	20
B46MP-R200	2"	1.870	2.519	1.7	2.3	145	1.4	N/A	40
B46MP-R250	2 1/2"	2.370	3.051	1.7	2.3	145	0.9	N/A	60
B46MP-R300	3"	2.870	3.582	1.7	2.3	145	0.5	N/A	100
B46MP-R400	4"*	3.834	4.682	1.7	2.7	145	0.5	N/A	210

* 4" uses bolted construction in place of clamp

Note: Drawing is for dimensional information only. Specifications and dimensions are subject to change without notice.

Ball Check Valves



These rugged valves are designed to prevent reverse flow in systems moving liquid products.

When liquid flows into the inlet, a PTFE ball rolls up into the branch of the valve allowing full fluid flow. When the flow stops, equalising the pressure, the ball drops back into the seat, preventing backflow. Should reverse flow occur, the opposing pressure will cause the ball to seat firmly against the inlet gasket preventing backflow.

- Two piece construction for easier alignment during installation
- Various end configurations available: RJT, DIN, SMS, IDF, Clamp.
- Polished ID and OD to 3A standards
- Sizes from 1½" - 3"
- All metal contact surfaces of 316 (CF8M) stainless steel construction
- Air blow check valve can be added (see air blow for sizing) page 103.
- PTFE ball

H

SIZE	COMPONENT SIZE (in)				BALL Ø	SEATING PRESSURE (inches) H2O	WEIGHT (lbs)
	BODY	CAP	CLAMP	GASKET			
1½"	1½"	2	2	2	1.6	0.75	4.9
2"	2"	2½"	2½"	2½"	2.1	0.75	6.6
2½"	2½"	3"	3"	3"	2.7	0.75	10.5
3"	3"	4"	4"	4"	3.6	0.75	17.5

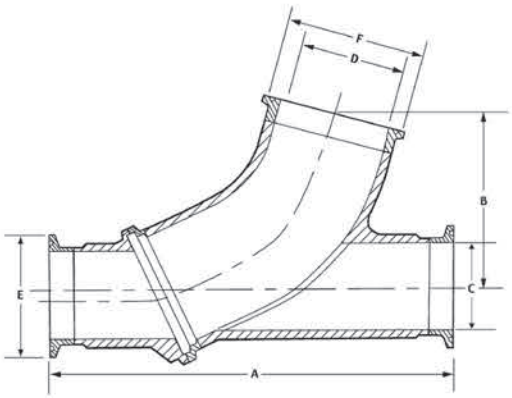



PART NO.	SIZE	DIMENSIONS (inches)					
		A	B	C	D	E	F
B45BY-R150	1½"	7.5	3.3	1.365	1.875	1.984	2.516
B45BY-R200	2"	8.5	3.9	1.865	2.335	2.516	3.047
B45BY-R250	2½"	10.0	4.5	2.370	2.870	3.047	3.579
B45BY-R300	3"	11.5	5.3	2.870	3.834	3.579	4.682

Note: Drawing is for dimensional information only. Specifications and dimensions are subject to change without notice.

Telephone: **+44 (0)1772 323529** Email: **sales@dixoneurope.co.uk**

Air Blow Check Valve

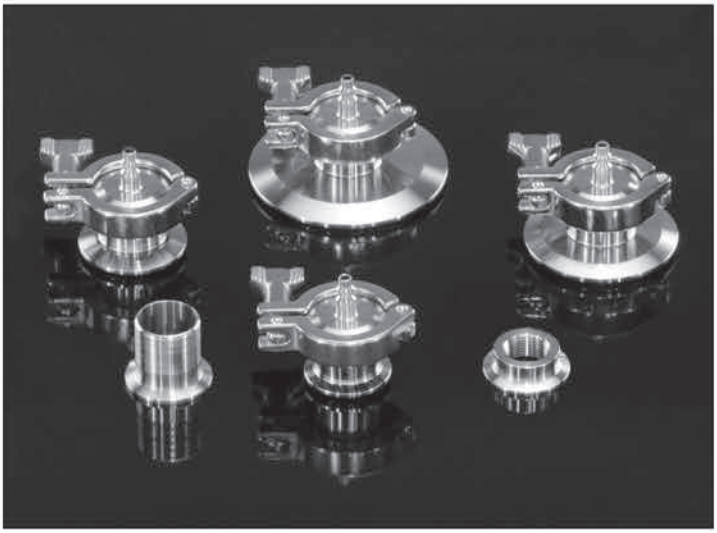

Dixon's air blow check valve is designed to evacuate lines of product or CIP solutions thus helping to protect the lines against corrosion. The valve's fail-safe operation prevents backflow with a simple air-to-open spring-to-close mechanism.

Attach and use with Dixon ball check valves, or any quick disconnect clamp configuration, to allow quick assembly and disassembly when replacing filter media, cleaning or inspecting.

FOR USE ON BALL CHECK VALVES:	
BALL CHECK VALVE SIZE	**AIR BLOW VALVE SIZE**
1½"	2"
2"	2½"
2½"	3"
3"	4"

- 316L stainless steel offered with EPDM stem seat and gasket
- Sizes from 1½" - 4"
- Conforms to 3A standards for filtration of air entering tanks or pipelines with optional filter disc
- Filter discs sold separately in packs of 50

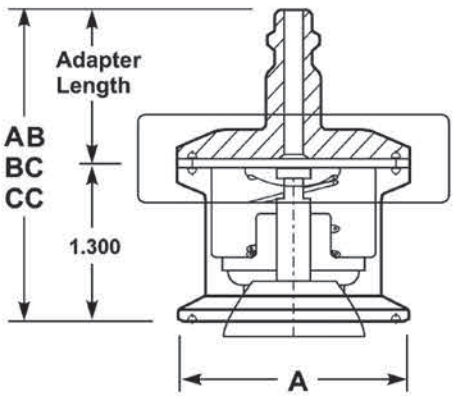

PART NO.	SIZE	DIMENSIONS (inches)			
		A	AB	BC	CC
B45AB-R100150	1 - 1½"	1.984	2.550	2.989	1.925
B45AB-R200	2"	2.516	2.550	2.989	1.925
B45AB-R250	2½"	3.047	2.550	2.989	1.925
B45AB-R300	3"	3.579	2.550	2.989	1.925
B45AB-R400	4"	4.682	2.550	2.989	1.925

Note: * AB dimension reflects valve length and quick coupler adapter (B16AC) - (standard)

* BC dimension reflects valve length and hose barb adapter (14MPHR)

* CC dimension reflects valve length and NPT adapter (B23BMP)

Note: Drawing is for dimensional information only. Specifications and dimensions are subject to change without notice.

Air Relief Valves



Get control with the dependable air relief valve which can be installed vertically on top of a tank, container or tube where air removal is required.

Examples:

1. Bleeding of a tube line where an air pocket has formed. This application calls for installation at the top of the tube.
2. Bleeding of a tube on the suction side of a pump. The suction side is bled automatically, before the pump starts, establishing a vacuum. Binding of air to liquid will be prevented, and so will subsequent cavitation. In this application the valve is mounted in front of the pump, on the top of the inlet tube.

Features and Benefits

- No tools for assembly or disassembly
- The ball and gaskets are replaceable
- The valve seals for both pressure and vacuum. The air and water can be directed away by using a plastic tube and the 1/8" FNPT connection port on the valve
- All product contact surfaces have a radius of ¼" or better
- The valve ball is constructed of FDA, 3A approved polypropylene
- PTFE valve ball is available (density=0.078 lb/in3)
- Other gasket materials available

H

Working Principle

The Dixon air relief valve allows air to be removed from a line or container without the liquid flowing out. Its design does not allow air to enter the line or container, even if subjected to a negative pressure. It is a doubleseated valve with a freely moving polypropylene ball. The ball, which is lighter than water, closes against the upper or lower seat, depending on the pressure conditions.

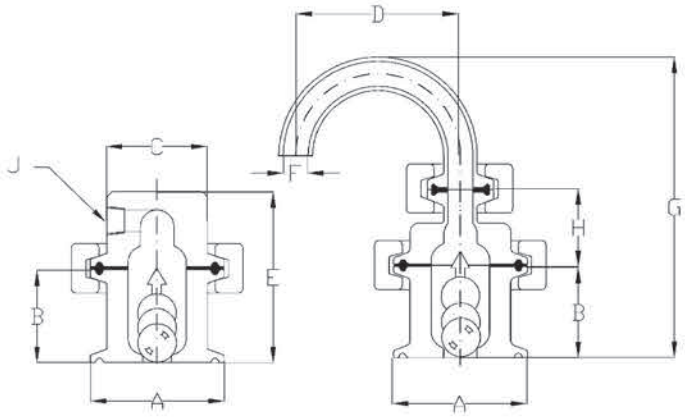

PART NO.	DESCRIPTION	DIMENSIONS (inches)								
		A	B	C	D	E	F	G	H	J
BARV-G150	air relief valve	1.98	1.4	1.5	–	2.4	–	–	–	1/8" NPT
BARVE-G150	3A air relief valve	1.98	1.4	–	1.5	–	0.37	4.5	1.1	–

Note: all dimensions are in inches. Dimensions are approximate. Engineering dimensions are available upon request. Specifications are subject to change without notice.

Telephone: **+44 (0)1772 323529** Email: **sales@dixoneurope.co.uk**

Ball Valves

Size Range: 1/2" - 4" O.D. (12 - 100mm)

Materials: (316) CF8M

Type of ends available: Clamp, Buttweld, RJT, DIN, SMS, IDF (other optional end connections available)

Contact your Dixon distributor for price and availability.

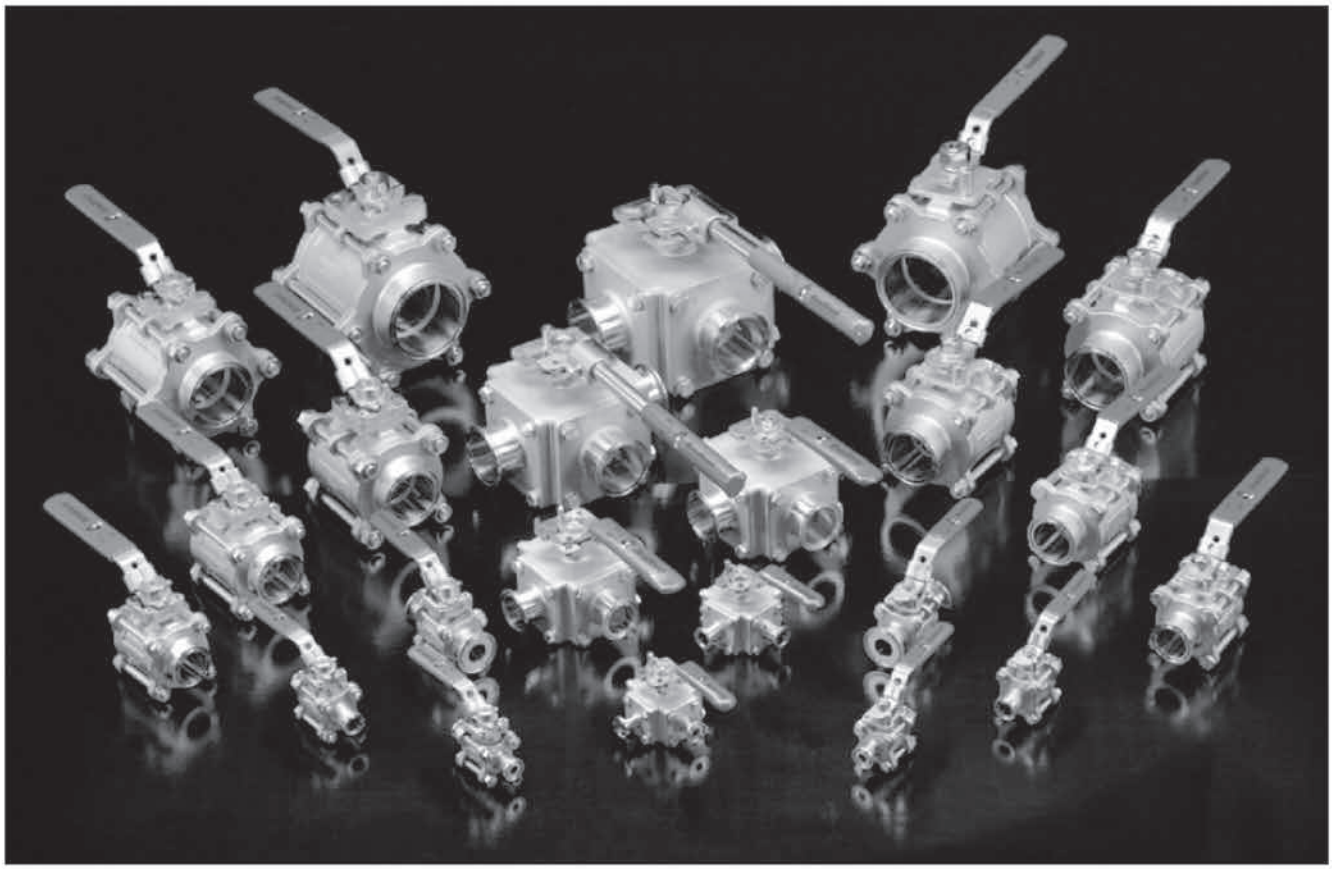

Businesses from food and beverage to pharmaceutical and cosmetics have trusted Dixon Hygienic ball valves for many years. The reason: Dixon Hygienic has the quality valves they need.

Ball valves are available in 1/2" - 4" and in various end connections such as clamp, butt-weld, RJT, DIN, SMS, and IDF. Call for delivery as these ends are special order. Actuation is available in double acting, air-to-spring and electric. Please call for delivery as availability varies according to the requirements.

2-Way 3-piece Encapsulated Ball Valve



The Dixon ball valve is designed as a three piece construction with swing out centre section for easy field repair and cleaning in place. Operating parts are stainless steel type CF8M (316) conforming to ASTM A351, solution annealed and passivated for corrosion resistance.

The ball is fully encapsulated to eliminate cavities for bacteria to form. Live loaded stem packing provides a leak proof design which allows time for scheduled maintenance. The full port design creates less turbulence and is self draining. Elevated, integral ISO 5211 mounting pad is part of the valve design making actuation easy without any custom brackets. The handle makes this suitable for lock-out / tag-out applications.

- ID is polished to 3A or better
- Blow-out-proof stem design
- Various ends available: clamp, buttweld, RJT, DIN, SMS, AND IDF
- Live loaded stem packing
- Direct mount actuation: double, air to spring, and electric
- Rated at 1,000 PSI WOG (water, oil and gas), most applications

I

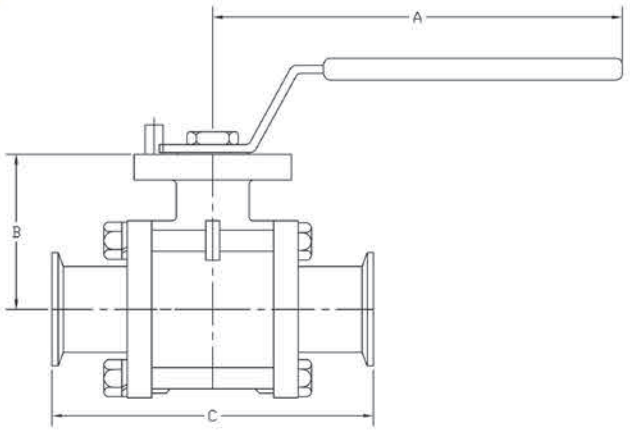

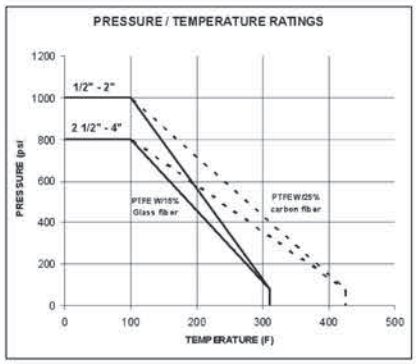

PART NO.	SIZE	DIMENSIONS (inches)					ASSEMBLY TORQUE (lbs)	BREAK TORQUE (lbs)	WEIGHT (lbs)
		A	B	C	D	E			
BV2C*-050CC-A	1/2"	4.7	1.5	4.3	3	1.9	160	50	1.5
BV2C*-075CC-A	3/4"	4.7	1.8	4.7	3.3	2.2	160	25	1.9
BV2C*-100CC-A	1"	5.2	2.1	4.9	3.6	2.4	160	90	2.7
BV2C*-150CC-A	1 1/2"	7.2	2.7	5.6	4.4	3.1	200	110	4.8
BV2C*-200CC-A	2"	7.2	3.1	6.4	4.8	3.7	212	300	8.9
BV2C*-250CC-A	2 1/2"	14.6	3.8	7.8	5.2	4.8	221	400	18.7
BV2C*-300CC-A	3"	15.7	4.2	9.0	5.7	5.4	239	550	29.7
BV2C*-400CC-A	4"	15.7	5.3	9.5	6.8	8.8	266	750	43.6

* See seat material options chart on page 107.

All dimensions are in inches. Dimensions are approximate. Engineering dimensions are available upon request.

Specifications are subject to change without notice.

Telephone: **+44 (0)1772 323529** Email: **sales@dixoneurope.co.uk**

Encapsulated 2-way 3 Piece Stainless Steel Ball Valve

Materials List for BV2C

ITEM	DESCRIPTION	MATERIAL	QUANTITY			
			½"- 2"	2½	3	4
1	body	ASTM A351-CF8M	1	1	1	1
2	end (4-bolt)	ASTM A351-CF8M	2	2	2	n/a
2A	end (6-bolt)	ASTM A351-CF8M	n/a	n/a	n/a	2
3	eall	ASTM A351-CF8M	1	1	1	1
4	seat (encapsulated)	see chart below	2	2	2	2
4A	seat (nonencap.)	see chart below	n/a	n/a	n/a	n/a
5	stem	see chart below	1	1	1	1
6	thrust washer	see chart below	1	1	1	1
7	O-ring	RTF	1	1	1	1
8	stem packing	see chart below	*	3	3	3
9	ring	AISI 316	1	1	1	1
10	bevel washer	AISI 301	3	3	3	3
11	hex nut	AISI 304	4	4	8	12
12	bolt washer	AISI 304	4	4	8	12
13	nut	AISI 304	2	2	2	2
14	bolt	AISI 304	4	4	n/a	n/a
14A	bolt (double thread)	AISI 304	n/a	n/a	4	6
15	handle	AISI 304/rubber	1	n/a	n/a	n/a
15A	handle (rod)	AISI 304/rubber	n/a	1	1	1
16	stop pin	AISI 316	1	1	1	1
17	gasket	see chart below	2	2	2	2
18	handle nut	AISI 304	n/a	1	1	1
19	handle head	AISI 304	n/a	1	1	1

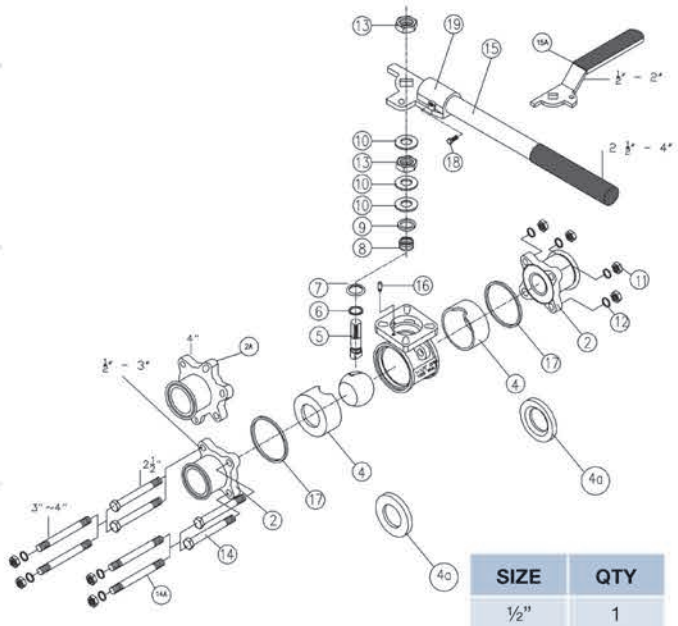

SIZE	QTY
½"	1
¾	2
1"- 2"	3

I

REPAIR KITS FOR BV2C					
SIZE	VIRGIN PTFE	RTFE	25% CARBON TFE	50% STAINLESS PTFE	UMHW
½"	BV-2C-VK050	BV-2C-GK050	BV-2C-CK050	BV-2C-SK050	BV-2C-UK050
¾"	BV-2C-VK075	BV-2C-GK075	BV-2C-CK075	BV-2C-SK075	BV-2C-UK075
1"	BV-2C-VK100	BV-2C-GK100	BV-2C-CK100	BV-2C-SK100	BV-2C-UK100
1½"	BV-2C-VK150	BV-2C-GK150	BV-2C-CK150	BV-2C-SK150	BV-2C-UK150
2"	BV-2C-VK200	BV-2C-GK200	BV-2C-CK200	BV-2C-SK200	BV-2C-UK200
2½"	BV-2C-VK250	BV-2C-GK250	BV-2C-CK250	BV-2C-SK250	BV-2C-UK250
3"	BV-2C-VK300	BV-2C-GK300	BV-2C-CK300	BV-2C-SK300	BV-2C-UK300
4"	BV-2C-VK400	BV-2C-GK400	BV-2C-CK400	BV-2C-SK400	BV-2C-UK400

Repair Kit contains:

- (2) body seals
- (2) O-rings
- (1) thrust washer
- (3) stem packings

Non-encapsulated version also available for actuation.

SEAT MATERIAL OPTIONS	
CODE	DESCRIPTION
V	Virgin PTFE
G	RTFE
C	25% carbon PTFE
S	SS reinforced PTFE
U	UHMW

3-Way Encapsulated Hygienic Ball Valve

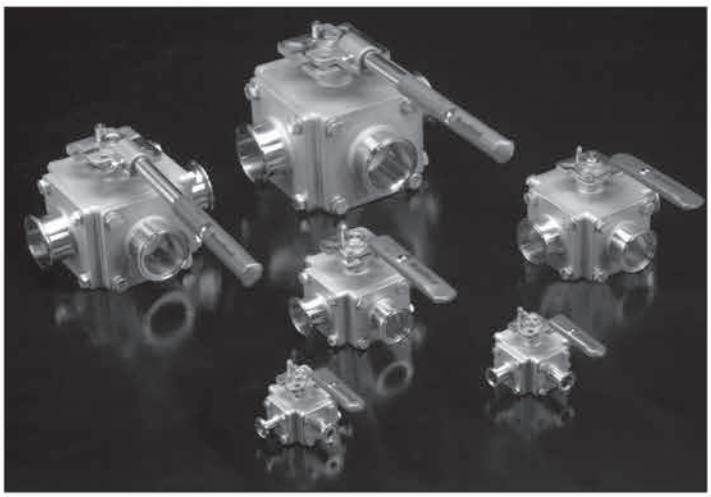

The Dixon 3-way ball valve is designed with a balanced four seat construction. Live loaded stem packing provides a leak-proof design allowing time to schedule maintenance. Operating parts are stainless steel type CF8M (316) conforming to ASTM A351, solution annealed and passivated for corrosion resistance. It is fully encapsulated to eliminate cavities for bacteria to form. Multiple flow patterns allow for more versatility in your processing applications. Integral ISO 5211 mounting pad is part of the valve design making actuation easy. The handle makes this suitable for lock-out / tag-out applications.

- ID is polished to 3A or better (Ra 32 min 0.8 micron)
- Blow-out-proof stem design
- Various ends available: Clamp, Buttweld, RJT, DIN, SMS, and IDF
- Actuation available: double-acting, air-to-spring, electric
- Rated at 1,000 PSI WOG (water, oil and gas) most applications
- Live loaded stem packing
- T and L flow patterns (side entry only)

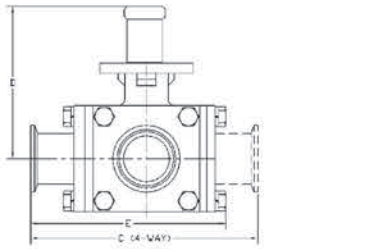

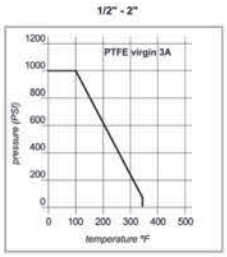

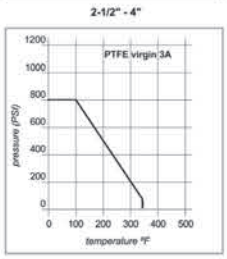

3-WAY 'L' PORT PART NUMBER	3-WAY 'T' PORT PART NUMBER	SIZE (inches)	DIMENSIONS (inches) A	B	C	D	E	BREAK TORQUE (IN-LBS.) 'L' PORT	'T' PORT	WEIGHT (LBS.)
BV3S*LF050CC-A	BV3S*TF050CC-A	½"	4.7	1.8	4.6	3.2	3.9	62	50	3.6
BV3S*LF075CC-A	BV3S*TF075CC-A	¾"	4.7	1.9	5.0	3.4	4.2	75	60	4.3
BV3S*LF100CC-A	BV3S*TF100CC-A	1"	5.2	2.3	6.0	3.8	5.0	100	80	6.8
BV3S*LF150CC-A	BV3S*TF150CC-A	1½"	7.2	2.8	6.9	4.5	5.8	262	210	12.6
BV3S*LF200CC-A	BV3S*TF200CC-A	2"	7.2	3.2	7.5	5.0	6.7	535	425	21.6
BV3S*LF250CC-A	BV3S*TF250CC-A	2½"	14.6	3.9	9.0	5.3	7.1	1250	1000	33.7
BV3S*LF300CC-A	BV3S*TF300CC-A	3"	15.7	4.9	10.2	6.4	8.5	1625	1300	56.4
BV3S*LR400CC-A	BV3S*TR400CC-A	4"**	15.7	5.3	11.4	6.8	10.6	1875	1500	85.4

* see seat material options chart on page 109.

** 4" multiport valves are reduced port. All others full port.

All dimensions are in inches. Dimensions are approximate. Engineering dimensions are available upon request. Specifications are subject to change without notice.

T PATTERN (TOP VIEW, 3 WAY, SIDE ENTRY)					
NUMBER	ROTATION	FLOW PLAN OPTIONS	NUMBER	ROTATION	FLOW PLAN OPTIONS
1	90°	1	5	180°	1
2	90°	2	6	180°	2
3	90°	3	7	180°	3
4	90°	4	8	180°	4

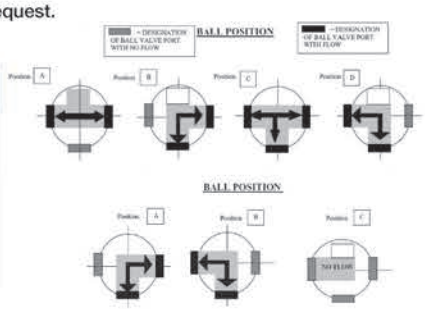

Telephone: **+44 (0)1772 323529** Email: **sales@dixoneurope.co.uk**

Multi-port 3-way Hygienic Stainless Steel Ball Valve

Materials List for BV3S/BV4S

ITEM	DESCRIPTION	MATERIAL	QUANTITY 3-WAY ½"-2"	3-WAY 2½"-4"	4-WAY ½"-2"	4-WAY 2½"-4"
1	body	ASTM A351-CF8M	1	1	1	1
2	end (large)	ASTM A351-CF8M	3	1	4	2
2A	end (small)	ASTM A351-CF8M	n/a	2	n/a	2
3	ball	ASTM A351-CF8M	1	1	1	1
4	seat 1	see chart below	2	2	2	2
5	gasket	see chart below	2	2	2	2
6	thrust washer	see chart below	1	1	1	1
7	O-ring	RTF	1	1	1	1
8	stem packing	see chart below	*	3	*	3
9	ring	AISI 316	1	1	1	1
10	spring washer	AISI 301	2	2	2	2
11	stop pin	AISI 316	1	1	1	1
12	nut	AISI 304	1	1	1	1
13	stem	AISI 316	1	1	1	1
14	handle	AISI 304	n/a	1	n/a	1
14A	handle w/cover	AISI 304/plastic	1	n/a	1	n/a
15	lock washer	AISI 304	16	16	16	16
16	bolt	AISI 304	16	16	16	16
17	stem packing nut	AISI 304	1	1	1	1
18	cover plate	ASTM A351-CF8M	1	1	n/a	n/a
19	seat 2	see chart below	2	2	2	2
20	plug	see chart below	1	1	n/a	n/a
21	handle cover	plastic	n/a	1	n/a	1
22	lock washer	AISI 304	n/a	1	n/a	1
23	handle bolt	AISI 304	n/a	1	n/a	1

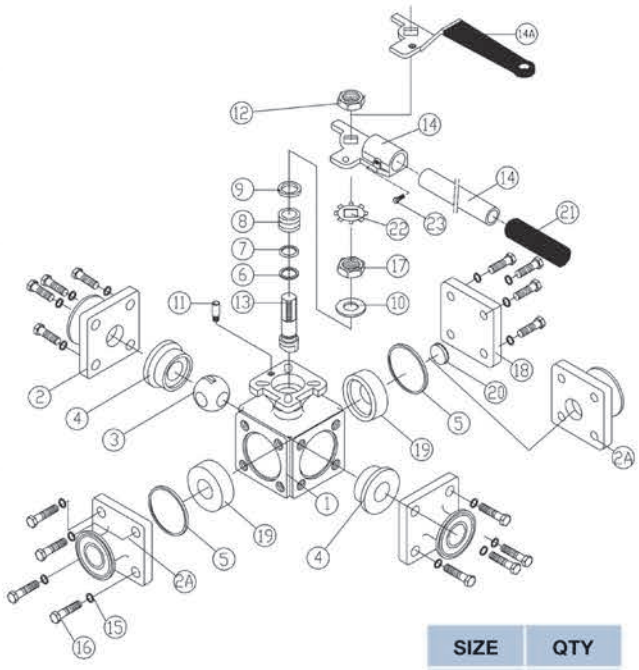

SIZE	QTY
½"	1
¾	2
1"- 2"	3

I

REPAIR KITS FOR BV3S					
SIZE	VIRGIN PTFE	RTFE	25% CARBON TFE	50% STAINLESS PTFE	UMHW
½"	BV-3SVFRK050	BV-3SGRK050	BV-3SCRK050	BV-3SSRK050	BV-3SURK050
¾"	BV-3SVFRK075	BV-3SGRK075	BV-3SCRK075	BV-3SSRK075	BV-3SURK075
1"	BV-3SVFRK100	BV-3SGRK100	BV-3SCRK100	BV-3SSRK100	BV-3SURK100
1½"	BV-3SVFRK150	BV-3SGRK150	BV-3SCRK150	BV-3SSRK150	BV-3SURK150
2"	BV-3SVFRK200	BV-3SGRK200	BV-3SCRK200	BV-3SSRK200	BV-3SURK200
2½"	BV-3SVFRK250	BV-3SGRK250	BV-3SCRK250	BV-3SSRK250	BV-3SURK250
3"	BV-3SVFRK300	BV-3SGRK300	BV-3SCRK300	BV-3SSRK300	BV-3SURK300
4"	BV-3SVRRK400	BV-3SGRK400	BV-3SCRK400	BV-3SSRK400	BV-3SURK400

Repair Kit contains:

- (2) body seals
- (2) O-rings
- (1) thrust washer
- (3) stem packings

Non-encapsulated version also available for actuation.

SEAT MATERIAL OPTIONS	
CODE	DESCRIPTION
V	Virgin PTFE
G	RTFE
C	25% carbon PTFE
S	SS reinforced PTFE
U	UHMW

4 way available. Contact Dixon for more information.

Multi-port 4-way Hygienic Stainless Steel Ball Valve



SIZE	L' PORT PART NUMBER	'T' PORT PART NUMBER
½"	BV4S*LF050CC-A	BV4S*TF050CC-A
¾"	BV4S*LF075CC-A	BV4S*TF075CC-A
1"	BV4S*LF100CC-A	BV4S*TF100CC-A
1½"	BV4S*LF150CC-A	BV4S*TF150CC-A
2"	BV4S*LF200CC-A	BV4S*TF200CC-A
2½"	BV4S*LF250CC-A	BV4S*TF250CC-A
3"	BV4S*LF300CC-A	BV4S*TF300CC-A
4"	BV4S*LR400CC-A	BV4S*TR400CC-A

REPAIR KITS FOR BV4S					
SIZE	VIRGIN PTFE	RTFE	25% CARBON TFE	50% STAINLESS PTFE	UMHW
½"	BV-4SVRK050	BV-4SGRK050	BV-4SCRK050	BV-4SSRK050	BV-4SURK050
¾"	BV-4SVRK075	BV-4SGRK075	BV-4SCRK075	BV-4SSRK075	BV-4SURK075
1"	BV-4SVRK100	BV-4SGRK100	BV-4SCRK100	BV-4SSRK100	BV-4SURK100
1½"	BV-4SVRK150	BV-4SGRK150	BV-4SCRK150	BV-4SSRK150	BV-4SURK150
2"	BV-4SVRK200	BV-4SGRK200	BV-4SCRK200	BV-4SSRK200	BV-4SURK200
2½"	BV-4SVRK250	BV-4SGRK250	BV-4SCRK250	BV-4SSRK250	BV-4SURK250
3"	BV-4SVRK300	BV-4SGRK300	BV-4SCRK300	BV-4SSRK300	BV-4SURK300
4"	BV-4SVRK400	BV-4SGRK400	BV-4SCRK400	BV-4SSRK400	BV-4SURK400

Repair Kit contains:

- (2) body seals
- (2) O-rings
- (1) thrust washer
- (3) stem packings

4-Way Ball Valve Flow Options

'T' PATTERN, SIDE ENTRY

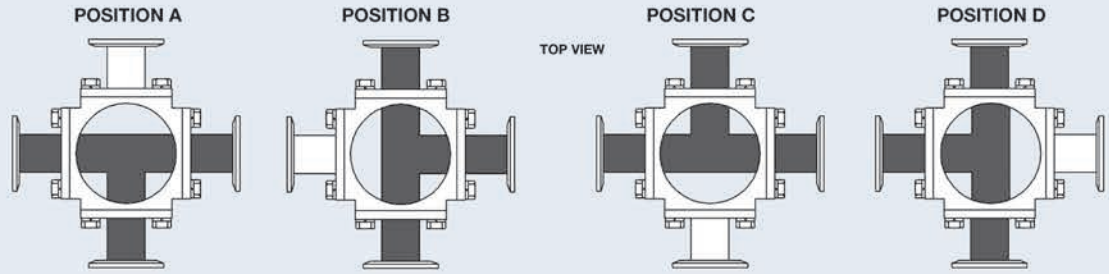

'L' PATTERN, SIDE ENTRY

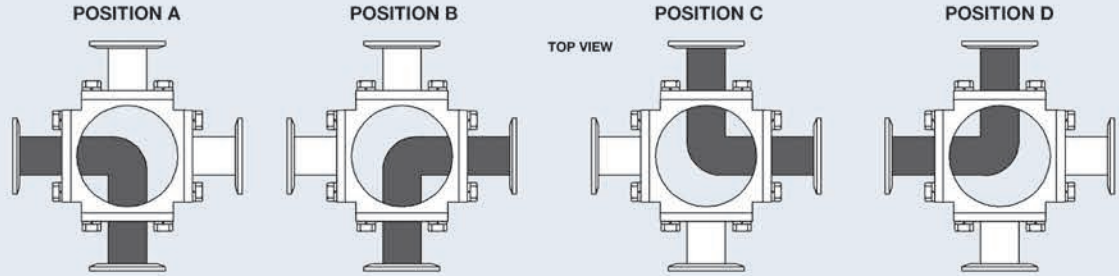

Telephone: +44 (0)1772 323529
Email: sales@dixoneurope.co.uk

Ball Valve Automation

Manual Ball Valves with Limit Switch

Dixon Hygienic offers remote indication on manual valve.

This allows an operator to see valve position from a central panel in the plant, saving labour costs.

Features and Benefits

- Signal back equipment can be provided for information on open / close positions, intermediate and proportional feedback
- Position detection can be determined using mechanical switches, proximity switches, or 4-20 mA signal transmission in NEMA 4 or NEMA 7 enclosures.



Dixon manual ball valve pictured with remote indication. **BV2CV-150CC-LB** Remote indication is also available on butterfly valves.

Multi-port Hygienic Ball Valves with Actuator



Dixon automated 1½" 3-way 'L'-port encapsulated hygienic ball valve with double acting actuator and NEMA 4 limit switch with two SPDT mechanical switches and NEMA 4 115 VAC solenoid pictured. **BV3SVLF150CBXC**.



Dixon automated ½" 3-way 'L'-port encapsulated hygienic ball valve with double acting actuator and NEMA 4 limit switch with two SPDT mechanical switches and NEMA 4 115 VAC solenoid pictured. **BV3SVLF050CBXC**.

Ball Valve Automation *(continued)*

3 piece Stainless Steel Hygienic Ball Valves

Dixon Hygienic offers various configurations of automated hygienic 2-way ball valves. Call for price and delivery of different options.



Dixon automated ½" encapsulated 2-way ball valve buttweld ends spring return actuator and NEMA 7 (explosion proof) SPDT limit switch with two proximity switches and NEMA 7 NAMUR mount 24VDC voltage solenoid valve pictured. **BV2CV-050BB-FPC**.



Dixon automated 3" encapsulated ball valve with direct mount double acting, (normally open), actuator and NEMA 7 (explosion proof with 2 mechanical switches) SPDT limit switch pictured. **BV2CV-300CC-QAC**.



Dixon automated 2½" 2-way encapsulated ball valve with spring return fail close actuator and NEMA 4/4X limit switch with two SPDT mechanical switches pictured. **BV2CV-250CC-BFC**.

Butterfly Valves

Size Range:	1/2" - 8"O.D (DN10 - DN100)
Materials:	(316) CF8M
Type of ends available:	Clamp, Buttweld, RJT, DIN, SMS, IDF
Type of seats available:	EPDM, Viton®, Silicone

Contact Dixon for price and availability.



Dixon Hygienic offers a wide selection of Dixon stainless steel butterfly valves for use in hygienic process systems. These valves are simple, rugged and above all, dependable. Dixon butterfly valves can be used either as a shutoff valve (on/off service) or as a throttling valve (for flow control).

Pneumatic or electric actuators are available for automated control.

All Dixon butterfly valves are assembled without silicone lubricant.

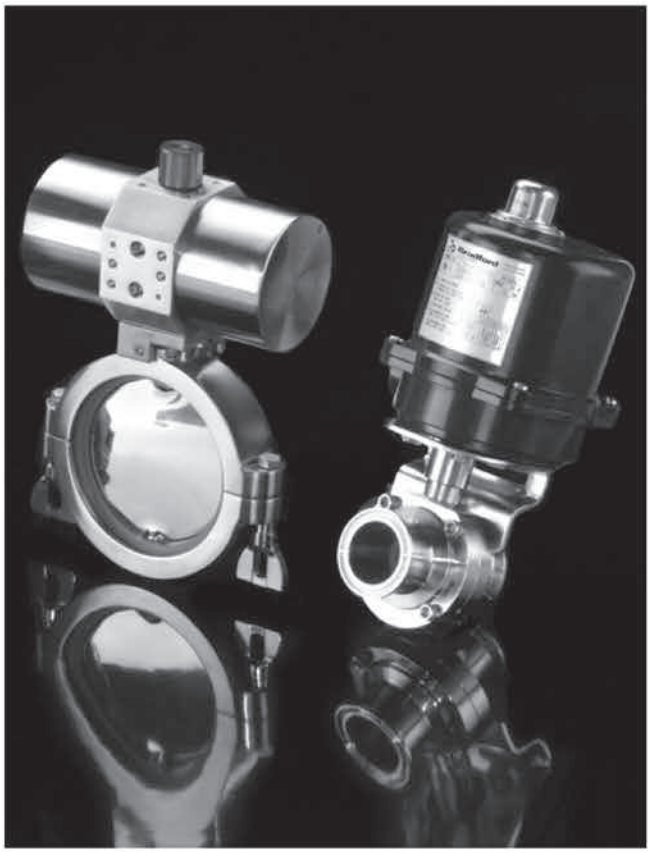



J

B5101 Series Butterfly Valve



Application

Get control with the Dixon B5101 series stainless steel butterfly valves. The slim design, superior craftsmanship, choice materials, top quality strength and surface finished make the B5101 the preference of many industries with hygienic requirements. Various elastomers, end types and accessories make this a highly versatile valve.

Typical uses would include isolation of equipment, fill/drain systems, bypass systems and other similar applications.

Working Principle

The B5101 is actuated manually with various handle options or remotely by a pneumatic or electric actuator.

A variety of handle options for manual flow regulation are available. The valve is fully open when the handle is parallel to the pipeline.

Pneumatic actuators are available in three styles:

- air to open - spring to close (ATO/STC)
- air to close - spring to open (ATC/STO)
- double acting (ATO/ATC)

J

Features and Benefits

- Low resistance to flow
- Bi-directional
- Gentle to media
- Suitable for low and medium viscosity fluids
- Field serviceable (no special tools required)
- Self-draining
- Various manual or automatic operators available
- Special handle available for accurate, manual flow balancing capabilities
- Polyacetal bushings for the valve disc reduce friction and increase cycle life
- Optional wing nut kit is available for effortless valve assembly and disassembly
- 100% tested/100% inspected
- All wetted surfaces are hygienic finished to < 32Ra (0.8Ra micron)
- Seat materials available include: silicone, EPDM, Viton®, (6" EPDM and silicone, 8" EPDM only)
- Sizes from 1" - 8" imperial and DN10-DN100 metric

Telephone: **+44 (0)1772 323529** Email: **sales@dixoneurope.co.uk**

B5101 Series Butterfly Valve



B51 SERIES BUTTERFLY VALVE WITH PULL HANDLE

SIZE	PART NUMBER WITH SILICONE SEATS	PART NUMBER WITH VITON® SEATS	PART NUMBER WITH EPDM SEATS
½"	B5101S050BB-A	B5101V050BB-A	B5101E050BB-A
¾"	B5101S075BB-A	B5101V075BB-A	B5101E075BB-A
1"	B5101S100BB-A	B5101V100BB-A	B5101E100BB-A
1½"	B5101S150BB-A	B5101V150BB-A	B5101E150BB-A
2"	B5101S200BB-A	B5101V200BB-A	B5101E200BB-A
2½"	B5101S250BB-A	B5101V250BB-A	B5101E250BB-A
3"	B5101S300BB-A	B5101V300BB-A	B5101E300BB-A
4"	B5101S400BB-A	B5101V400BB-A	B5101E400BB-A
6"	B5101S600BB-A	-	B5101E600BB-A
8"	-	-	B5101E800BB-A

BB = Weld Ends CC = Clamp

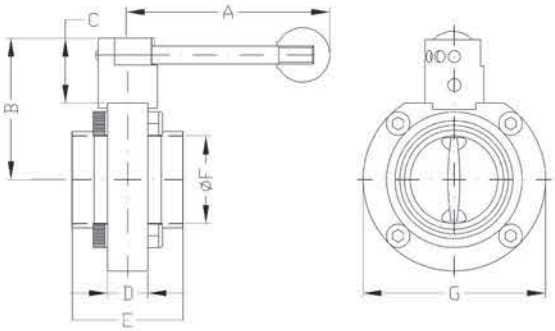

SIZE	DIMENSIONS (mm)						
	A	B	C	D	E	F	G
1"	111.76	71.12	35.56	22.86	48.26	22.86	78.74
1½"	111.76	71.12	35.56	22.86	48.26	35.56	78.74
2"	111.76	78.74	35.56	22.86	50.80	48.26	99.06
2½"	111.76	88.90	35.56	22.86	53.34	60.96	116.84
3"	157.48	96.52	33.02	30.48	63.50	73.66	132.08
4"	157.48	114.30	33.02	30.48	78.74	96.52	170.18
6"	292.10	139.70	33.02	30.48	139.70	147.32	215.90
8"	457.20	175.26	40.64	30.48	124.46	198.12	284.48

Note: All dimensions are for Butt Weld End option. Dimensions are approximate. Engineering dimensions are available upon request.

Specifications are subject to change without notice.

RJT, DIN, SMS, IDF CLAMP ENDS AVAILABLE.

J

B51 SERIES BUTTERFLY VALVE WITH TRIGGER HANDLE

SIZE	PART NUMBER WITH SILICONE SEATS	PART NUMBER WITH VITON® SEATS	PART NUMBER WITH EPDM SEATS
½"	B5101S050BB-C	B5101V050BB-C	B5101E050BB-C
¾"	B5101S075BB-C	B5101V075BB-C	B5101E075BB-C
1"	B5101S100BB-C	B5101V100BB-C	B5101E100BB-C
1½"	B5101S150BB-C	B5101V150BB-C	B5101E150BB-C
2"	B5101S200BB-C	B5101V200BB-C	B5101E200BB-C
2½"	B5101S250BB-C	B5101V250BB-C	B5101E250BB-C
3"	B5101S300BB-C	B5101V300BB-C	B5101E300BB-C
4"	B5101S400BB-C	B5101V400BB-C	B5101E400BB-C
6"	B5101S600BB-C	-	-

BB = Weld Ends CC = Clamp

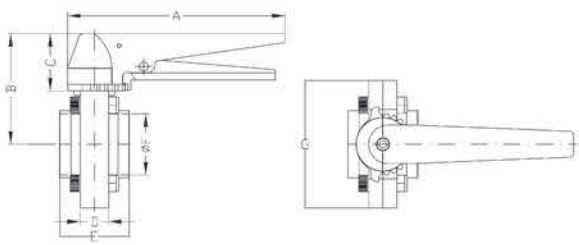

SIZE	DIMENSIONS (mm)						
	A	B	C	D	E	F	G
1"	167.64	76.20	43.18	22.86	48.26	22.86	78.74
1½"	167.64	76.20	43.18	22.86	48.26	35.56	78.74
2"	167.64	88.90	43.18	22.86	50.80	48.26	99.06
2½"	167.64	93.98	43.18	22.86	53.34	60.96	116.84
3"	167.64	99.06	43.18	30.48	63.50	73.66	132.08
4"	167.64	121.92	43.18	30.48	78.74	96.52	170.18

Note: All dimensions are for Butt Weld End option. Dimensions are approximate. Engineering dimensions are available upon request.

Specifications are subject to change without notice.

RJT, DIN, SMS, IDF CLAMP ENDS AVAILABLE.

B5101 Series Butterfly Valve - DIN 11852 Weld End



B51 SERIES BUTTERFLY VALVE WITH PULL HANDLE (METRIC)

SIZE	PART NUMBER WITH SILICONE SEATS	PART NUMBER WITH VITON® SEATS	PART NUMBER WITH EPDM SEATS
DN10	B5101S050DBB-A	B5101V050DBB-A	B5101E050DBB-A
DN15	B5101S075DBB-A	B5101V075DBB-A	B5101E075DBB-A
DN25	B5101S100DBB-A	B5101V100DBB-A	B5101E100DBB-A
DN32	B5101S125DBB-A	B5101V125DBB-A	B5101E125DBB-A
DN40	B5101S150DBB-A	B5101V150DBB-A	B5101E150DBB-A
DN50	B5101S200DBB-A	B5101V200DBB-A	B5101E200DBB-A
DN65	B5101S250DBB-A	B5101V250DBB-A	B5101E250DBB-A
DN80	B5101S300DBB-A	B5101V300DBB-A	B5101E300DBB-A
DN100	B5101S400DBB-A	B5101V400DBB-A	B5101E400DBB-A

BB = Weld Ends CC = Clamp

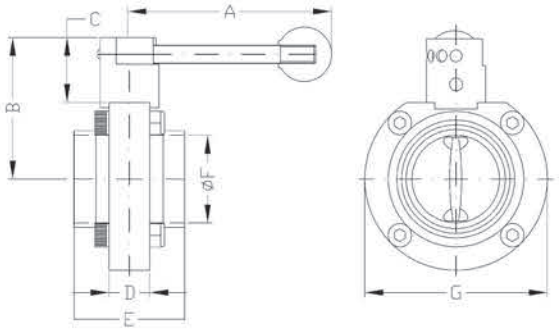

SIZE	DIMENSIONS (mm)						
	A	B	C	D	E	F	G
DN25	111.76	71.12	35.56	22.86	48.26	28	78.74
DN32	111.76	71.12	35.56	22.86	48.26	34	78.74
DN40	111.76	71.12	35.56	22.86	48.26	40	78.74
DN50	111.76	78.74	35.56	22.86	50.80	52	99.06
DN65	111.76	88.90	35.56	22.86	53.34	70	116.84
DN80	157.48	96.52	33.02	30.48	63.50	85	132.08
DN100	157.48	114.30	33.02	30.48	78.74	101.6	170.18

Note: All dimensions are for Butt Weld End option. Dimensions are approximate. Engineering dimensions are available upon request.

Specifications are subject to change without notice.

RJT, DIN, SMS, IDF CLAMP ENDS AVAILABLE.

J



B51 SERIES BUTTERFLY VALVE WITH TRIGGER HANDLE (METRIC)

SIZE	PART NUMBER WITH SILICONE SEATS	PART NUMBER WITH VITON® SEATS	PART NUMBER WITH EPDM SEATS
DN25	B5101S100DBB-C	B5101V100DBB-C	B5101E100DBB-C
DN32	B5101S125DBB-C	B5101V125DBB-C	B5101E125DBB-C
DN40	B5101S150DBB-C	B5101V150DBB-C	B5101E150DBB-C
DN50	B5101S200DBB-C	B5101V200DBB-C	B5101E200DBB-C
DN65	B5101S250DBB-C	B5101V250DBB-C	B5101E250DBB-C
DN80	B5101S300DBB-C	B5101V300DBB-C	B5101E300DBB-C
DN100	B5101S400DBB-C	B5101V400DBB-C	B5101E400DBB-C
DN150	B5101S600DBB-C	-	-

BB = Weld Ends CC = Clamp

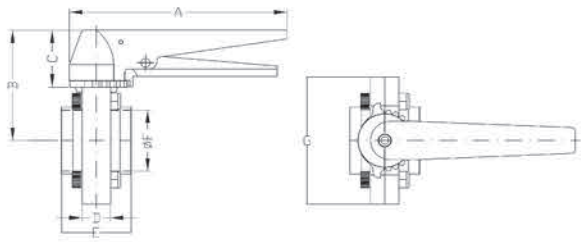

SIZE	DIMENSIONS (mm)						
	A	B	C	D	E	F	G
DN25	167.64	76.20	43.18	22.86	48.26	28	78.74
DN32	167.64	76.20	43.18	22.86	48.26	34	78.74
DN40	167.64	76.20	43.18	22.86	48.26	40	78.74
DN50	167.64	88.90	43.18	22.86	50.80	52	99.06
DN565	167.64	93.98	43.18	22.86	53.34	70	116.84
DN80	167.64	99.06	43.18	30.48	63.50	85	132.08
DN100	167.64	121.92	43.18	30.48	78.74	101.6	170.18

Note: All dimensions are for Butt Weld End option. Dimensions are approximate. Engineering dimensions are available upon request.

Specifications are subject to change without notice.

RJT, DIN, SMS, IDF CLAMP ENDS AVAILABLE.

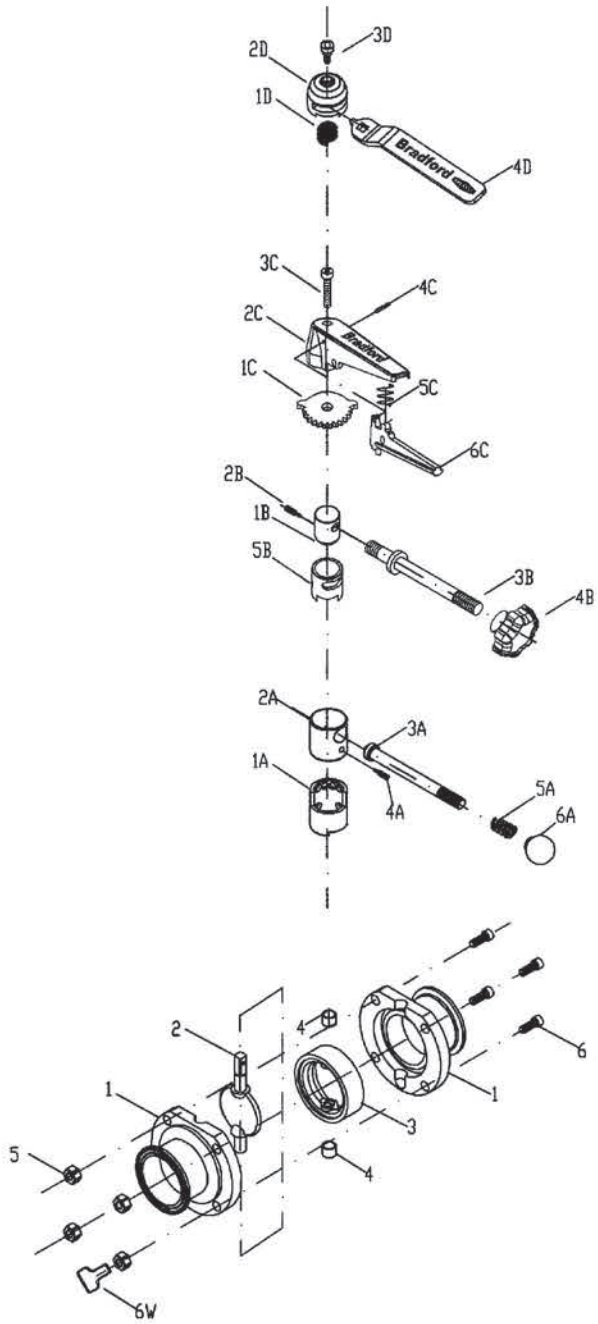

MATERIALS LIST			
ITEM #	DESCRIPTION	MATERIAL	QTY
PUSH HANDLE			
1D	spring	304	1
2D	hub	CF8	1
3D	handle	CF8	1
4D	hex socket bolt	304	1
TRIGGER HANDLE			
1C	sprocket	CF8	1
2C	handle	CF8	1
3C	hex socket bolt	304	1
4C	pin	304	1
5C	spring	304	1
6C	trigger	CF8	1
INFINITE HANDLE			
1B	hub	CF8	1
2B	hex socket screw	304	1
3B	handle shaft	304	1
4B	knob	polymer	1
5B	hub housing	CF8	1
PULL HANDLE			
1A	hub housing	CF8	1
2A	hub	CF8	1
3A	handle shaft	304	1
4A	hex socket screw	304	1
5A	spring	304	1
6A	knob	polymer	1
VALVE			
1	body half	CF8M	1
2	disc	CF8M	1
3	seat	silicone EPDM Viton®	1
4	bushing	polyacetal	2
5	hex nut	304	4 *
6	bolt	304	4 *
6W	wing nut kit (optional)	304	4 *

* 6" valve has a quantity of 8 each

4" and 8" valves have a quantity of 6 each

Repair Kit contains:

(1) silicone, EPDM, or Viton® seal

(2) bushings

B51 SERIES BUTTERFLY VALVE WITH TRIGGER HANDLE			
SIZE	(RED) SILICONE PART NO.	(BLACK) EPDM PART NO.	(BROWN) VITON® PART NO.
1"	B5101-RKS100	B5101-RKE100	B5101-RKV100
1½"	B5101-RKS150	B5101-RKE150	B5101-RKV150
2"	B5101-RKS200	B5101-RKE200	B5101-RKV200
2½"	B5101-RKS250	B5101-RKE250	B5101-RKV250
3"	B5101-RKS300	B5101-RKE300	B5101-RKV300
4"	B5101-RKS400	B5101-RKE400	B5101-RKS400
6"	B5101-RKS600	B5101-RKE600	-
8"	-	B5101-RKE800	-

B51 SERIES BUTTERFLY VALVE WITH TRIGGER HANDLE - DN			
SIZE	(RED) SILICONE PART NO.	(BLACK) EPDM PART NO.	(BROWN) VITON® PART NO.
DN25	B5101-RKS100D	B5101-RKE100D	B5101-RKV100D
DN32	B5101-RKS125D	B5101-RKE125D	B5101-RKV125D
DN40	B5101-RKS150D	B5101-RKE150D	B5101-RKV150D
DN50	B5101-RKS200D	B5101-RKE200D	B5101-RKV200D
DN565	B5101-RKS250D	B5101-RKE250D	B5101-RKV250D
DN80	B5101-RKS300D	B5101-RKE300D	B5101-RKV300D
DN100	B5101-RKS400D	B5101-RKE400D	B5101-RKS400D

J

Butterfly Valve Automation - 5101 Series

Technical Data, Specifications and Dimensions

SIZE	DIMENSION A (in)
1"	68.58
1½"	68.58
2"	78.74
2½"	88.9
3"	93.98
4"	114.3

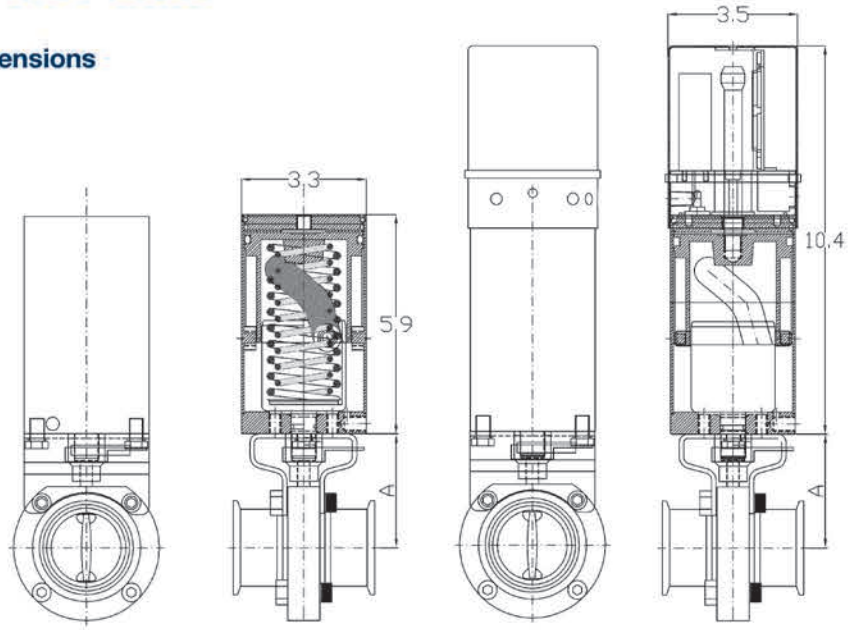

Note: all dimensions are in inches. Dimensions are approximate. Engineering dimensions are available upon request.

Specifications are subject to change without notice.

J



BUTTERFLY VALVE WITH EPDM SEATS AND A VERTICAL SPRING RETURN NORMALLY OPEN PNEUMATIC CANISTER STYLE ACTUATOR	
PART NUMBER	**SIZE**
B5101E100CC-F	1"
B5101E150CC-F	1½"
B5101E200CC-F	2"
B5101E250CC-F	2½"
B5101E300CC-F	3"
B5101E400CC-F	4"

BUTTERFLY VALVE WITH EPDM SEATS AND A VERTICAL SPRING RETURN NORMALLY CLOSED PNEUMATIC CANISTER STYLE ACTUATOR	
PART NUMBER	**SIZE**
B5101E100CC-G	1"
B5101E150CC-G	1½"
B5101E200CC-G	2"
B5101E250CC-G	2½"
B5101E300CC-G	3"
B5101E400CC-G	4"

BUTTERFLY VALVE WITH EPDM SEATS AND A VERTICAL DOUBLE ACTING PNEUMATIC CANISTER STYLE ACTUATOR	
PART NUMBER	**SIZE**
B5101E100CC-H	1"
B5101E150CC-H	1½"
B5101E200CC-H	2"
B5101E250CC-H	2½"
B5101E300CC-H	3"
B5101E400CC-H	4"

SILICONE AND VITON® SEATS ARE ALSO AVAILABLE.

Telephone: **+44 (0)1772 323529** Email: **sales@dixoneurope.co.uk**

Manual Butterfly Valves with Limit Switch

Dixon Hygienic offers remote indication on manual valves. Make sure valves are open or closed from a remote location.

Features and Benefits

- Signal back equipment can be provided for information on open / close positions, intermediate and proportional feedback
- Position detection can be determined using mechanical switches, proximity switches, or 4-20 mA signal transmission in NEMA 4 or NEMA 7 enclosures



Dixon manual butterfly valve with remote indication.

B5101S200CC-LJ remote indication is also available on ball valves.



Dixon automated butterfly valve with vertical canister air-to-open spring-to-close actuator and proximity sensors. **B5101S200CC-MI**



Dixon automated butterfly valve with vertical canister air-to-open spring-to-close actuator and control top, with 24VDC solenoid. **B5101S200CC-ZB**

DIXON HYGIENIC OFFERS VARIOUS CONFIGURATIONS OF AUTOMATED BUTTERFLY VALVES. CALL FOR PRICE AND DELIVERY.

Valve Automation Introduction



Dixon stainless steel pneumatic vertical canister actuators are designed for use on butterfly valve sizes up to 4" They are available with the Dixon control top, in addition to other accessories.

Dixon stainless steel pneumatic horizontal actuators are designed for use on ball and butterfly valves. A special double acting design is for use on the B5102 series butterfly valve. Rack and pinion actuators can be used on either ball or butterfly valves.

Dixon aluminium pneumatic rack and pinion horizontal actuators are designed for use on all ball and butterfly valves.

Dixon electric actuators are designed for use on all ball and butterfly valves.

Accessories for valve automation are not limited. Dixon Hygienic can offer almost everything necessary to automate any Dixon valve, or any other manufacturers valve.

Dixon Hygienic products are rugged and dependable. Most actuated products can ship within 24 hours of the order being placed.

Inductive Proximity Sensors

PART NO. PS-AM1-AP-2A SPECIFICATIONS	
Sensing Range	0-4mm
Housing	Unshielded - nickel plated brass housing
Output State	Normally Open
Logic	PNP
Connection	2m axial cable
Wiring	see diagram 1
Dimensions	see diagram 2
Size	M12
Power	10-30 VDC
Rating	IP 67 w/ complete overload protection
Differential Travel	2 to 10%
Repeat Accuracy	< 2%
Ripple	< 10%
No Load Supply Current	< 20mA
Load Current	< 200mA
Leakage Current	< 10µA
Voltage Drop	1.2 Volts maximum
Switching Frequency	2KHz
(tv) Time Delay before availability	100ms
Input Voltage Transient Protection	up to 30 VDC
Output Power Short-Circuit Protection	yes (switch auto resets after overload is removed)
Temperature Range	-25° to 70° C
Temperature DRIFT	10% Sr
Protection Degree (DIN 40050)	IEC IP67
LED Indicators	yellow (N.O. output energized)
Sensing Face Material	PBT
Tightening Torque	88 in-lb
Weight	70g
Material Correction Factors	SS (x0.85) - steel type FE 360(x1.00)

Other voltages, housings, and options available.

2 Socket Bolt
M4xL10mm 90 apart

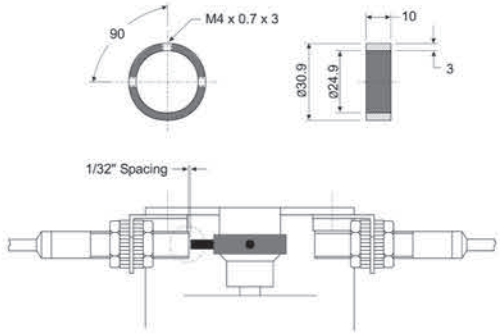

PNP Output

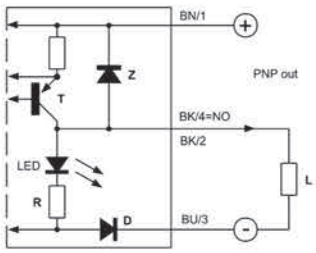

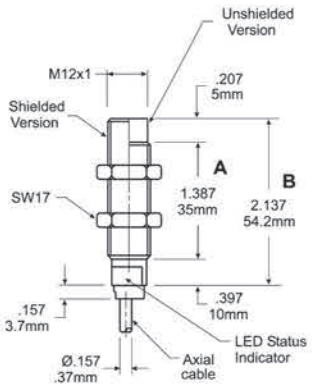

Bracket Mounted Micro-Switches

These bracket mounted mechanical micro switches are mounted directly to the bracket between the actuator and the valve. This is the most economical means of sending a signal for open and close indication.

- Input voltage: 24 to 48VDC; 110 to 250 VAC
- Maximum current: 5 amps
- Life cycles mechanical: 5,000,000
- Temperature range: (40°F to 175°F) 4.5°C to 79.5°C

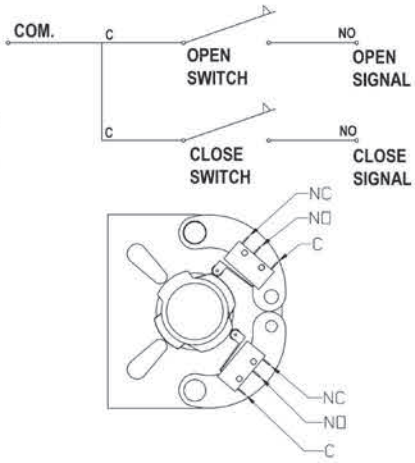



Rotary Switch Boxes – SP Series

Compact limit switch box, designed not only for the industrial market, but for indoor applications in hazardous areas.

Available in either glass reinforced resin or nickel plated aluminium, with flat lid or 3D indicator.

The SP is a corrosion resistant device, able to satisfy the needing in water treatment and desalination plants; SP can also match the Ex ia IIC T6 standards with the integral intrinsically safe certification, covering enclosure and electrical components inside.



Benefits:

- Compact Design
- Suitable in corrosive environments
- Integrated mounting kit
- High thickness threaded cable entry
- Easy and fast installing procedure
- Cost effective

Features:

- Glass reinforced resin enclosure with transparent polycarbonate lid, ensuring a device totally unaffected by corrosion, in salty and humid atmosphere.
- One cable entry metrics or imperial.
- Enhanced strength on the composite enclosure, with a thick moulding and durable threaded cable entries.
- Easy wiring through the terminal PCB board
- NOVA V3™ switch option ensures extreme durability and high power switching capabilities
- ASI communication protocol board

Technical Data:

Approvals:	ATEX, EAC: - Ex II 2GD Ex ia IIC T4/T5/T6 - Ex ia IIB T44°C...T108°C Db IP6* Ta: -15°C≤Ta≤80°C
SIL certificate:	Up to SIL 2 certified by TUV
Protection rating:	IP 65
Cable entries option:	One cable entry M20 or 1/2" NPT
Temperature:	Standard operating temperature -15°C +80°C Lower and higher temperature options available on request.

K

Telephone: **+44 (0)1772 323529** Email: **sales@dixoneurope.co.uk**

Solenoid Valves

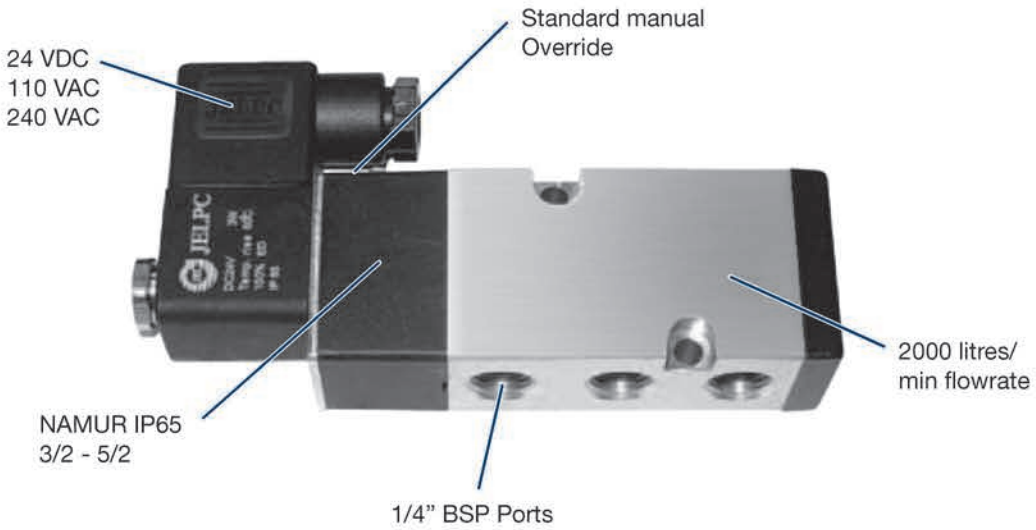

General Purpose IP65 – 300 Series

¼" BSP IP65 N/C Single coil Spring Return Supplied with Coil assembled to body, packed singlely in box.

General Specification:

Operating Life Minimum:	5 Million Ops
Guarantee Design/ Manufacture:	2 Years
ISO Approved:	IP65
CE Marked	
Enclosure (IP65)	

Features:

- IP65 Namur Solenoid
- 5/2 & 3/2 N/C
- 24 VDC, 110/240 VAC
- Manual Override Standard
- 200 litre/min Flow Rate
- Hard Anodised Finish
- ¼ BSP Ports
- Nitrile Seals
- Plug & Socket 10mm Cable Entry
- Tested to 10 Million Ops
- All Metal Construction
- 2 Year Global Guarantee
- ISO 9000 & CE Approved

Technical Details:

Body:	Hard Adonised
Colour - Body:	Silver
Colour - End Caps:	Black
Spool - corrosion resistant:	Coated
O - Rings:	2 x nitrile
Body & End cap material:	Aluminium
Coil Connection:	Plug & Socket
Coil cable entry – integral (DIN):	10mm diameter
Armature:	Anti corrosive coating
Moulding:	Plastic
Marking:	Full electrical specification

Electrical:

Voltage Options:	24 VDC, 110 VAC, 240 VAC
Frequency of coil:	50/60 Hz
Power Consumption:	3 Watts DC/5.5 vA AC
Insulation Class (coil):	F class
Temperature Rating:	60 / -5°C
Voltage Range:	Minus 15% to Plus 10%

Mechanical:

Inlet Ports:	¼" BSP
Outlet Ports:	¼" BSP
Manual Over Ride:	Standard
Flow Rate:	2000 l/min
Pressure Range:	1.5/8 kgf/cm2
Pressure Rating (Proof):	10.5 kgf/cm2
Max. Pressure:	12 kgf/cm2
Namur Pattern:	2 x nitrile O-Rings
Position (At Rest):	Normally closed
Operating Fluid:	40 micron filtered air

Adaptor Plate (for 3/2 Option Only):

Material:	Aluminium
O-Rings:	2 x nitrile
Exhaust Filter:	Sintered metal
Namur Pattern:	Yes

Positioners - XPO-P4F (Pneumatic Positioner)



Features

- Cam characterized and force balanced
- Cast aluminium NEMA 4X housing with electrostatically applied polyester coating
- Operates on a standard 3-15 Volt PSI signal (12 PSI span, optional 24 PSI)
- Pressure gauge blocks built into the unit
- Large indicator has scaling to operate in both direct and reverse directions
- Feedback units available - call factory for details

Technical Specifications

- Input range: 3-15 PSI
- Supply pressure: <145 PSI
- Linearity error: <0.7 f.s.
- Hysteresis: <0.4 f.s.
- Repeatability: <0.3 f.s.
- Pressure gain: 750:1 P
- Air delivery:

	SCFM
@ 29 PSI (200 kPa)	9.5
@ 87 PSI (600 KPa)	28.3
@ 145 PSI	47.1

- Air consumption:

	SCFM
@ 29 PSI (200 kPa)	0.18
@ 87 PSI (600 KPa)	0.53
@ 145 PSI	0.88

- Temperature range: -40°F (-40°C) to 185°F (85°C)
- Air connections: ¼" NPT
- Gauge port: $^1/_8$" NPT
- Ingress and corrosion protection: NEMA 4X and IP 66
- Coating: Powder polyester (nickel - optional)
- Weight: 3.5 lbs.

Telephone: **+44 (0)1772 323529** Email: **sales@dixoneurope.co.uk**

XPO-E4F (Electro-Pneumatic Positioner)

Features

- Cam characterized and force balanced
- Cast aluminium NEMA 4X housing with electrostatically applied polyester coating
- Operates on a 4-20 mA signal
- Pressure gauge blocks built into the unit
- Large indicator has scaling to operate in both direct and reverse directions
- Feedback units available - call factory for details

Technical Specifications

- Input range: 4-20 (R1<170 ohms
- Supply pressure: 22-145 PSI
- Linearity error: <1.0 f.s.
- Hysteresis: <0.5 f.s.
- Repeatability: <0.3 f.s.
- Pressure gain: 750:1 P out /P in

• Air delivery:	SCFM
@ 29 PSI (200 kPa)	9.5
@ 87 PSI (600 KPa)	28.3
@ 145 PSI	47.1

• Air consumption:	SCFM
@ 29 PSI (200 kPa)	0.18
@ 87 PSI (600 KPa)	0.53
@ 145 PSI	0.88

- Temperature range: -40°F (-40°C) to 185°F (85°C)
- Air connections: ¼" NPT
- Gauge port: 1/8" NPT
- Ingress and corrosion protection: NEMA 4X and IP 66
- Coating: Powder polyester (nickel - optional)
- Weight: 3.8 lbs.

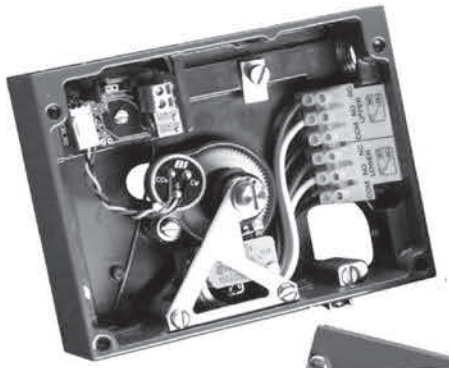



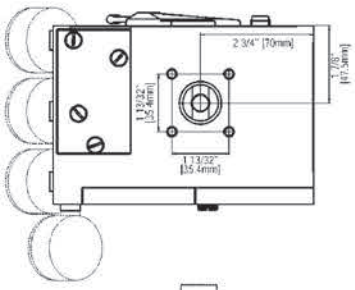

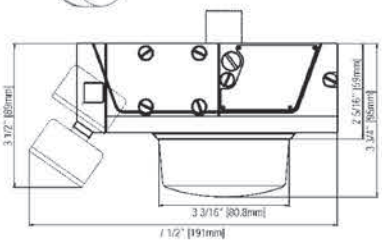

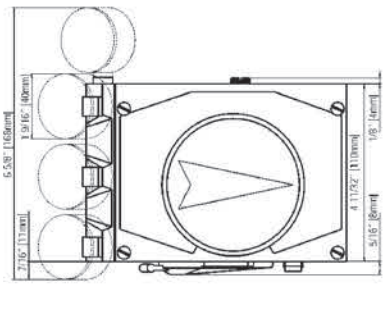

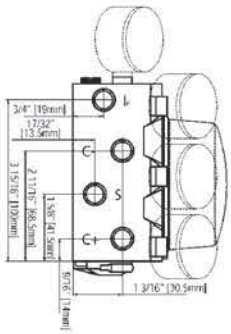

K

Vertical Stainless Steel Canister

without Control Top

- Excellent protection and corrosion resistance
- Tested to 1 million cycles
- 100% fully tested prior to shipment
- Backed by one year manufacturer's warranty
- Designed for butterfly valves sizes 1" - 4"
- Available in:
  Air to open / air to close (ATO/ATC)
  Air to open / spring to close (ATO/STC)
  Spring to open / air to close (STO/ATC)

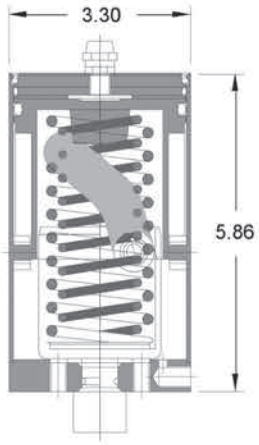



Note: All dimensions are in inches. Dimensions are approximate. Engineering dimensions are available upon request.

Specifications are subject to change without notice.

SIZES	DESCRIPTION	PART NUMBER
1" - 4"	Double Acting	VC-NR-100-DA
1" - 4"	Spring Return	VC-NR-100-SR

with Control Top

- Excellent protection and corrosion resistance
- Tested to 1 million cycles
- 100% fully tested
- Backed by one year manufacturer's warranty
- Designed for butterfly valves sizes 1" - 4"
- Includes control top with solenoid and micro switches for flawless control
- Available in:
  Air to open / air to close (ATO/ATC)
  Air to open / spring to close (ATO/STC)
  Spring to open / air to close (STO/ATC)
  24 volt DC solenoid
  110 volt AC solenoid

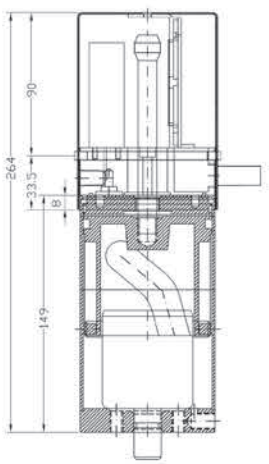

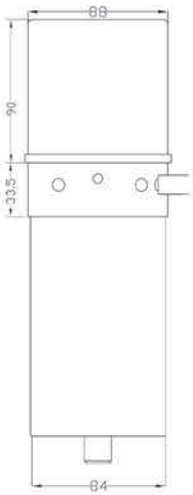



Note: All dimensions are in inches. Dimensions are approximate. Engineering dimensions are available upon request.

Specifications are subject to change without notice.

SIZES	DESCRIPTION	PART NUMBER	
		110vAC	24vDC
1" - 4"	Double Acting	VC-NR-100-DA-ZJ	VC-NR-100-DA-ZI
1" - 4"	Spring Return	VC-NR-100-SR-ZH	VC-NR-100-SR-ZG

Note: Each Dixon pneumatically actuated butterfly valve is shipped fully assembled, including pneumatic actuator and mounting bracket assembly.

When ordering spring return actuators, please indicate if the valves need to be normally open or normally closed.

Vertical Stainless Steel Canister and Control Top

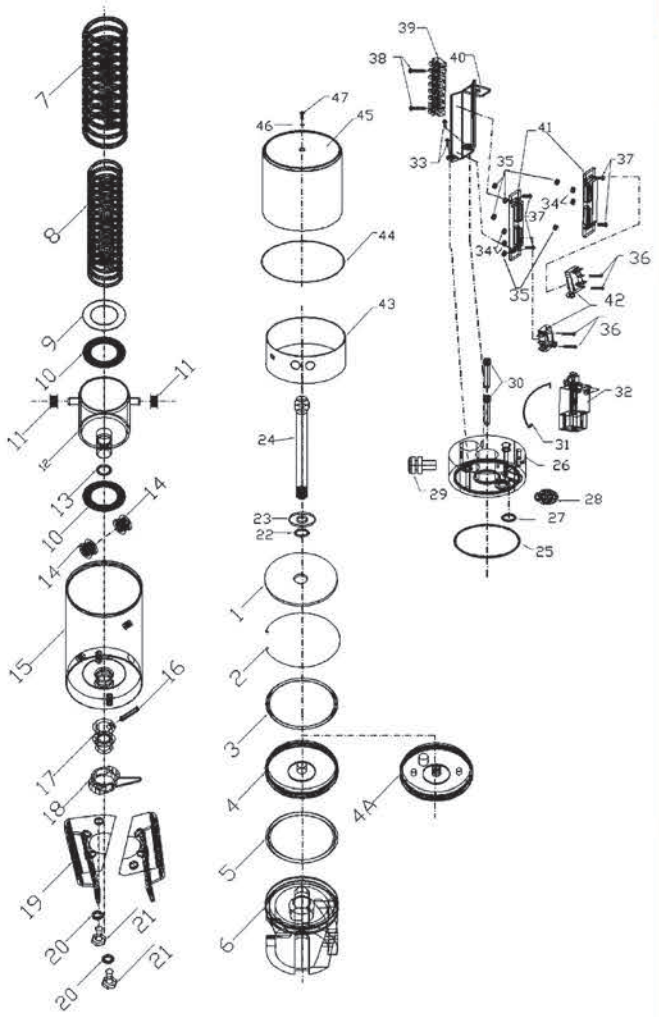

MATERIALS LIST						
ITEM	DESCRIPTION	MATERIAL	QUANTITY w/o Control Top		QUANTITY with Control Top	
			SR	DA	SR	DA
1	top cap	304 stainless	1	1	n/a	n/a
2	retaining ring	304 stainless	1	1	1	1
3	O-ring	EPDM	1	1	1	1
4	end cap	304 stainless	1	1	n/a	n/a
4A	manifold cap	304 stainless	n/a	n/a	1	1
5	O-ring	EPDM	1	1	1	1
6	piston	aluminium	1	1	1	1
7	outer spring	302 stainless	1	n/a	1	n/a
8	inner spring	302 stainless	1	n/a	1	n/a
9	thrust drive	304 stainless	1	n/a	1	n/a
10	thrust bearing	304 stainless	2	1	2	1
11	needle bearing	304 stainless	2	2	2	2
12	drive assembly	304 stainless	1	1	1	1
13	O-ring	EPDM	1	1	1	1
14	needle bearing	304 stainless	2	2	2	2
15	body	304 stainless	1	1	1	1
16	split pin	304 stainless	1	1	1	1
17	coupler	304 stainless	1	1	1	1
18	indicator	plastic	1	1	1	1
19	bracket spring	304 stainless	2	2	2	2
20	washer	304 stainless	2	2	2	2
21	bracket bolt	304 stainless	2	2	2	2
22	O-ring	EPDM	n/a	n/a	1	1
23	washer	304 stainless	n/a	n/a	1	1
24	detection shaft	304 stainless	n/a	n/a	1	1
25	O-ring	EPDM	n/a	n/a	1	1
26	manifold	POM	n/a	n/a	1	1
27	O-ring	EPDM	n/a	n/a	1	1
28	air fitting	nickel plated brass	1	2	1	4
29	conduit entry	plastic	n/a	n/a	1	1
30	bolt	304 stainless	n/a	n/a	2	2
31	pneumatic tube	polyethylene	n/a	n/a	1	4
32	solenoid valve	anodized AL	n/a	n/a	1	2
33	bolt	304 stainless	n/a	n/a	2	2
34	nut	304 stainless	n/a	n/a	4	4
35	nut	304 stainless	n/a	n/a	6	6
36	bolt	304 stainless	n/a	n/a	4	4
37	bolt	304 stainless	n/a	n/a	4	4
38	bolt	304 stainless	n/a	n/a	2	2
39	terminal strip	plastic	n/a	n/a	1	1
40	switch rack	304 stainless	n/a	n/a	1	1
41	switch plate	POM	n/a	n/a	2	2
42	mech.micro switch	silver contact	n/a	n/a	2	2
43	manifold sleeve	304 stainless	n/a	n/a	1	1
44	cover seal	PTFE	n/a	n/a	1	1
45	cover	304 stainless	n/a	n/a	1	1
46	O-ring	Buna	n/a	n/a	1	1
47	bolt	304 stainless	n/a	n/a	1	1

Horizontal Double Acting Stainless Steel Actuator

- Excellent protection and corrosion resistance
- Tested to 1 million cycles
- 100% fully tested prior to shipment
- Backed by one year manufacturer's warranty
- Designed for the B5102 series butterfly valves sizes 1" - 4"
- Can be mounted on most Dixon BFV's up to 4"
- 6" and 8" valves must use a horizontal rack and pinion style actuator due to torque requirements
- Available in air to open / air to close (ATO/ATC)



Dimensions

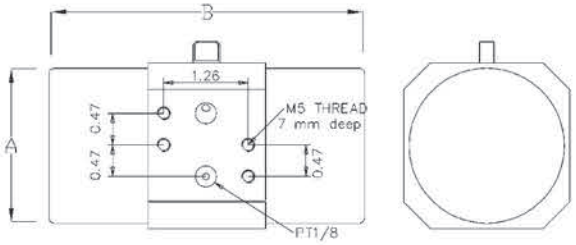

SIZES	DESCRIPTION		PART NUMBER
	A	B	
1" - 2"	2.4	3.2	RP-BS-050-DA
2½" - 4"	4.6	6.1	RP-BS-075-DA

Note: All dimensions are in inches. Dimensions are approximate. Engineering dimensions are available upon request.

Specifications are subject to change without notice.

K

MATERIALS LIST			
ITEM	DESCRIPTION	MATERIAL	QTY
1	body	304 stainless	1
2	cylinder	304 stainless	2
3	pinion	304 stainless	1
4	piston	aluminium	2
5	lower bushing	17-4PH	1
6	upper bushing	17-4PH	1
7	piston ring	PTFE	2
8	pinion	high carbon steel	2
9	bolt	high carbon steel	2
10	bolt ring	high carbon steel	2
11	arm	high carbon steel	2
12	connector	304 stainless	2
13	body seal	NBR	2
14	cap seal	NBR	2
15	piston seal	NBR	2
16	bushing seal	NBR	1
17	pinion seal	NBR	1
18	ub seal	NBR	1
19	set screw	high carbon steel	2
20	flat head screw	304 stainless	1
21	socket head screw	304 stainless	1
22	indicator	aluminium	1

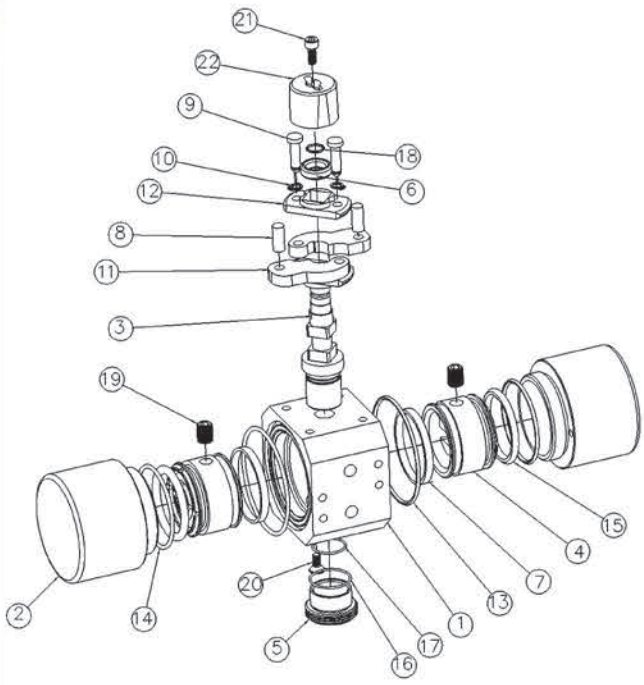

Telephone: **+44 (0)1772 323529** Email: **sales@dixoneurope.co.uk**

Horizontal Rack and Pinion Stainless Steel Actuator

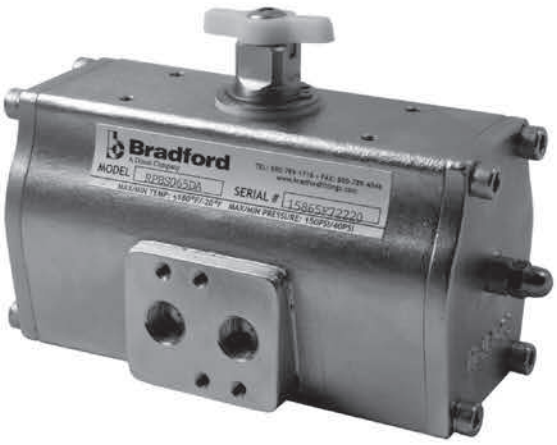

- Replaceable top and bottom PTFE pinion bearings ensure low friction, stability above 400°F, and chemical resistance
- Travel stops provide 4° travel adjustment
- Precision cast stainless steel pistons are guided through full face engagement with the pinion and piston guide
- NAMUR slotted shaft is standard to provide a self-centering positive drive for positioners, a variety of switches
- Drive pinion is one piece stainless steel alloy shaft, precision machined gear and teeth for precise control
- ISO 5211 mounting
- Available in:
  Air to open / air to close (ATO/ATC)
  Air to open / spring to close (ATO/STC)
  Spring to open / air to close (STO/ATC)

Dimensions (inches)

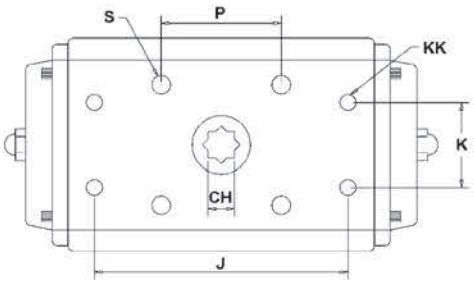

Top View

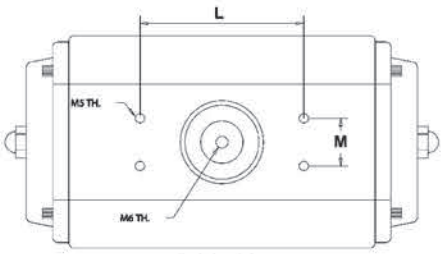

Bottom View

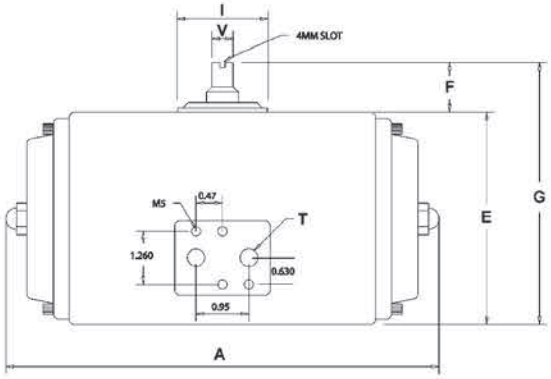

Front View

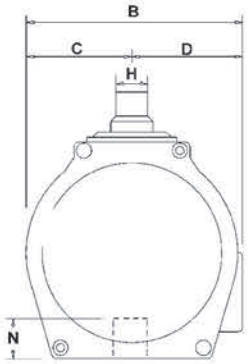

Side View

PART NO.	A (DA)	A (SR)	B	C	D	E	F	G	CH	J	L	N	M	P	S	T	V	KK
RP-BS-45 *	6.54	7.56	2.56	1.15	1.15	2.56	0.787	3.34	0.433	1.42	3.15	0.58	1.181	1.97	10-24	¼" NPT	0.633	1/4 x 20
RP-BS-65 *	7.00	7.34	2.92	1.39	1.39	3.18	0.787	3.97	0.551	1.97	3.15	0.59	1.181	n/a	1/4 x 20	¼" NPT	0.633	n/a
RP-BS-80 *	7.81	8.37	3.97	1.91	1.91	4.24	0.787	5.03	0.748	1.97	3.15	0.66	1.181	2.76	1/4 x 20	¼" NPT	0.635	5/16 x 18
RP-BS-105 *	9.91	10.53	4.75	2.29	2.29	5.23	0.787	6.02	0.748	2.76	3.15	0.77	1.181	n/a	5/16 x 18	¼" NPT	0.629	n/a
RP-BS-125 *	11.66	12.20	5.39	2.69	2.69	6.09	1.181	7.27	0.866	2.76	5.12	0.97	1.181	4.02	3/8 x 16	¼" NPT	0.865	3/8 x 16
RP-BS-140*	14.17	19.29	6.26	3.11	3.11	6.89	1.181	8.07	1.063	4.02	5.12	1.18	1.181	4.92	3/8 x 16	¼" NPT	0.865	1/2 x 13

* - DA = double acting; - SR = spring return

Note: all dimensions are in inches. Dimensions are approximate. Engineering dimensions are available upon request.

Specifications are subject to change without notice.

Horizontal Rack and Pinion Stainless Steel Actuator

Technical Data

TORQUE RATINGS FOR DOUBLE ACTING ACTUATOR					
PART NUMBER	40 PSI / 2.76 BAR	60 PSI / 4.14 BAR	80 PSI / 5.52 BAR	100 PSI / 6.89 BAR	120 PSI / 8.27 BAR
RP-BS-045-DA	71	107	143	178	214
RP-BS-065-DA	171	256	342	427	512
RP-BS-080-DA	370	555	740	925	1110
RP-BS-105-DA	624	936	1249	1561	1873
RP-BS-125-DA	1214	1822	2429	3036	3643
RP-BS-140-DA	2034	3051	4068	5085	6102

TORQUE RATINGS FOR SPRING RETURN ACTUATOR											
PART NUMBER	SPRING PER SIDE	SPRING TORQUE		40 PSI / 2.76 BAR		60 PSI / 4.14 BAR		80 PSI / 5.52 BAR		100 PSI / BAR	
	(5 STD)	END	BREAK	END	BREAK	END	BREAK	END	BREAK	END	BREAK
RP-BS-045-SR	3	35	57	14	36	50	72	86	108	121	143
	4	47	77	--	--	30	60	66	96	101	131
	5	60	96	--	--	--	--	47	83	82	118
	6	71	115	--	--	--	--	--	--	63	107
RP-BS-065-SR	3	67	136	35	104	120	189	206	275	291	360
	4	90	182	--	--	74	166	160	252	245	337
	5	112	227	--	--	--	--	115	230	200	315
	6	135	273	--	--	--	--	--	--	154	292
RP-BS-080-SR	3	167	273	97	203	282	388	467	573	652	758
	4	223	364	--	--	191	332	376	517	561	702
	5	279	456	--	--	--	--	284	461	469	646
	6	335	547	--	--	--	--	--	--	378	590
RP-BS-105-SR	3	346	574	50	278	362	590	675	903	987	1215
	4	461	766	--	--	170	475	483	788	795	1110
	5	576	956	--	--	--	--	293	673	605	985
	6	692	1141	--	--	--	--	--	--	420	869
RP-BS-125-SR	3	651	1141	73	563	681	1171	1288	1778	1895	2385
	4	869	1522	--	--	300	953	907	1560	1514	2167
	5	1080	1902	--	--	--	--	527	1349	1134	1956
	6	1301	2283	--	--	--	--	--	--	753	1735
RP-BS-140-SR	3	808	1859	175	1226	1192	2243	2209	3260	3226	4277
	4	1071	2487	--	--	564	1980	1581	2997	2598	4014
	5	1345	3107	--	--	--	--	961	2723	1978	3740
	6	1610	3726	--	--	--	--	--	--	1359	3475

Actuator Torque Output (In. Lbs.)

Telephone: **+44 (0)1772 323529** Email: **sales@dixoneurope.co.uk**

Horizontal Rack and Pinion Stainless Steel Actuator

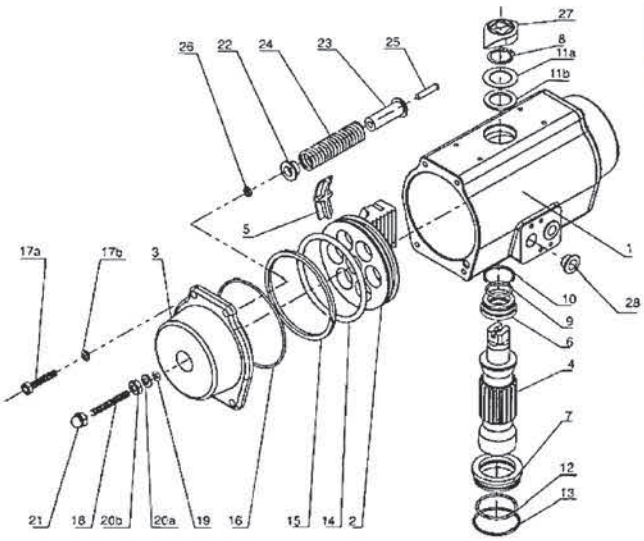

MATERIALS LIST			
ITEM	DESCRIPTION	MATERIAL	QTY
1	body	stainless steel	1
2	piston	stainless steel	2
3	end caps	stainless steel	2
4	pinion	stainless steel	1
5	guide bearing	nylon 6	1
6	pinion bearing (top)	TFE	1
7	pinion bearing (bottom)	TFE	1
8	snap ring	stainless steel	1
9	O-ring (inner top)	Viton®	1
10	O-ring (outer top)	Viton®	1
11A	washer	stainless steel	1
11B	bearing	nylon 6	1
12	O-ring (inner bottom)	Viton®	1
13	O-ring (outer bottom)	Viton®	1
14	O-ring (piston)	Viton®	2
15	piston bearing	nylon 6	2
16	O-ring (end cap)	Viton®	2
17A	bolts (end cap)	stainless steel	8
17B	lock washer	stainless steel	8
18	travel stop	stainless steel	2
19	O-ring (travel stop)	Viton®	2
20A	washer	stainless steel	2
20B	nut (travel stop)	stainless steel	2
21	retaining nut	stainless steel	2
22	spring retainer	nylon 6	*
23	spring	plated carbon steel	*
24	spring	plated carbon steel	*
25	spring screw	stainless steel	*
26	spring nut	stainless steel	*
27	position indicator	nylon	1
28	port plug	nylon 6	2

Aluminium Rack and Pinion Actuator

- Body: Extruded hard anodized aluminium alloy for wear and corrosion resistance and reduced friction.
- Heavy Duty Springs: High tensile steel springs with retainer and guide for safe and easy assembly.
- Pistons: Die-cast aluminium alloy fitted with nylon bushing guides and Buna-N seals.
- End Caps: Epoxy-coated die-cast aluminium alloy for maximum resistance to corrosive environments.
- Pinion: Electroless nickel plated carbon steel for maximum corrosion and wear resistance.
- Rotation Adjustment: A full ±5° of travel adjustment in the open and closed positions. Standard on all sizes.
- Solenoid Interface: International NAMUR solenoid mounting interface is standard on all units.
- Indicator: A high visibility polyethylene for indication. Open/Close indication is standard on all models.
- Available in:
  Air to open / air to close (ATO/ATC)
  Air to open / spring to close (ATO/STC)
  Spring to open / air to close (STO/ATC)



Double Acting



Spring Return

Dimensions for RP-BA-012-DA

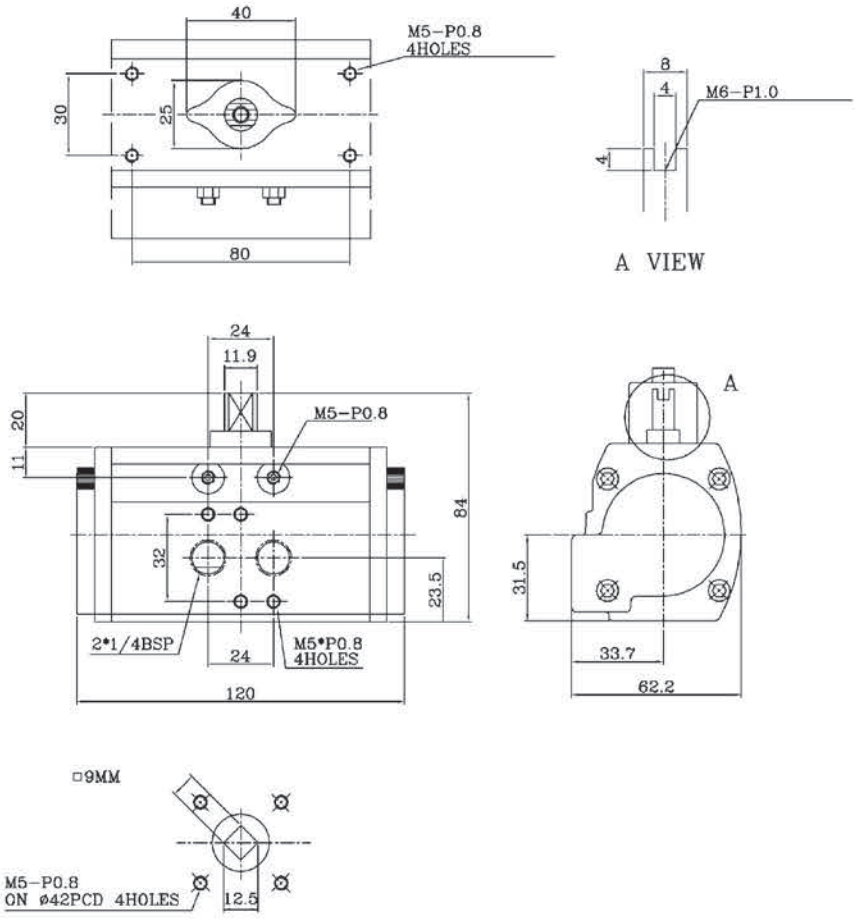

Aluminium Rack and Pinion Actuator

Dimensions for RP-BA-025-DA/SR to RP-BA-500-DA/SR

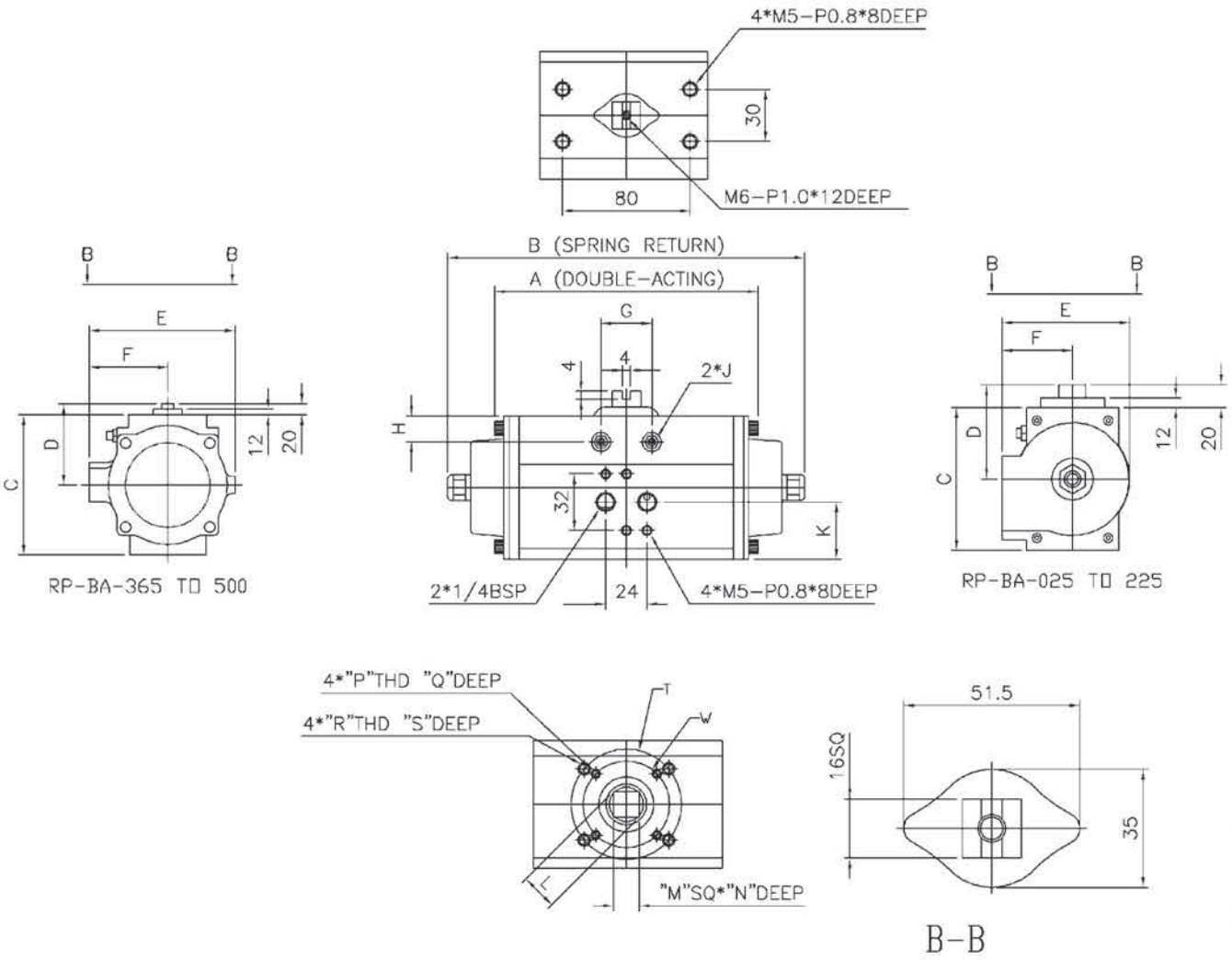

Part No.	ISO 5211	A	B	C	D	E	F	G	H	J	K	L	M	N	P	Q	R	S	T	W
RP-BA-025-*	F04/F05	144.3	194.6	79	57.7	81.4	47.8	32.5	12.6	M5xP0.8	29.7	14.5	11	17	M5xP0.8	8	M6xP1.0	10	50	42
RP-BA-045-*	F05/F07	149.2	205.6	98	67.4	95	51.5	32.5	13.8	M6xP1.0	30.2	18.8	14	21	M6xP1.0	10	M8xP1.25	12	70	50
RP-BA-101-*	F05/F07	183	250	121	79.2	119	64.5	46.2	16.6	M8xP1.25	33.5	23	17	25.5	M6xP1.0	10	M8xP1.25	12	70	50
RP-BA-225-*	F07/F10	259.6	355	141	89.5	140.5	75.5	54	18.6	M10xP1.5	39	29.5	22	31	M8xP1.25	12	M10xP1.5	15	102	70
RP-BA-365-*	F10/F12	304.3	422	176	99.1	185.2	105.5	79.7	27.3	M12xP1.75	97.4	35.5	27	35	M10xP1.5	15	M12xP1.75	19	125	102
RP-BA-500-*	F10/F12	364.4	487	196	116.5	204.8	107.8	79.4	28.3	M12xP1.75	99	35.5	27	35	M10xP1.5	15	M12xP1.75	19	125	102

* - DA = double acting; - SR = spring return

Aluminium Rack and Pinion Actuator

Technical Data

TORQUE RATINGS FOR DOUBLE ACTING ACTUATOR					
PART NUMBER	40 PSI / 2.76 BAR	60 PSI / 4.14 BAR	80 PSI / 5.52 BAR	100 PSI / 6.89 BAR	120 PSI / 8.27 BAR
RP-BA-012-DA	63	94	125	156	188
RP-BA-025-DA	125	187	250	312	375
RP-BA-045-DA	225	337	450	562	675
RP-BA-101-DA	500	750	1000	1250	1500
RP-BA-225-DA	1125	1687	2250	2812	3375
RP-BA-365-DA	1825	2738	3650	4563	5475
RP-BA-500-DA	2500	3750	5000	6250	7500

TORQUE RATINGS FOR SPRING RETURN ACTUATOR												
PART NO.	SPRING SET	SPRING TORQUE		40 PSI / 2.76 BAR		60 PSI / 4.14 BAR		80 PSI / 5.52 BAR		100 PSI / 6.89 BAR		120 PSI / 8.27 BAR	
		ST.	END	ST.	END	ST.	END	ST.	END	ST.	END	ST.	END
RP-BA-025-SR	2	69	45	76	47	138	109	201	172	263	234	326	312
	3	104	67	- -	- -	113	70	176	133	229	195	301	258
	4	140	90	- -	- -	88	31	151	93	213	156	276	218
	5	175	112	- -	- -	- -	- -	126	54	189	116	251	179
	6	209	135	- -	- -	- -	- -	- -	- -	164	77	227	139
RP-BA-045-SR	2	126	81	135	83	248	196	361	309	473	421	586	533
	3	190	121	- -	- -	203	125	316	238	428	350	541	463
	4	254	162	- -	- -	158	54	271	167	383	279	496	392
	5	317	202	- -	- -	- -	- -	226	96	339	209	451	321
	6	381	243	- -	- -	- -	- -	- -	- -	293	137	406	251
RP-BA-101-SR	2	279	179	300	184	549	433	798	682	1048	931	1297	1181
	3	418	270	- -	- -	449	278	698	526	947	775	1196	1025
	4	559	360	- -	- -	350	120	599	371	848	618	1097	867
	5	698	450	- -	- -	- -	- -	500	212	749	464	998	710
	6	839	540	- -	- -	- -	- -	- -	- -	650	304	899	557
RP-BA-225-SR	2	659	394	690	395	1253	958	1816	1521	2379	2084	2939	2647
	3	990	590	- -	- -	1034	591	1596	1154	2159	1717	2722	2280
	4	1320	787	- -	- -	816	226	1379	788	2029	1351	2505	1914
	5	1650	984	- -	- -	- -	- -	1161	424	1724	984	2287	1549
	6	1980	1181	- -	- -	- -	- -	- -	- -	1506	621	2069	1181
RP-BA-365-SR	2	1053	607	1152	659	2063	1570	2975	2482	3886	3393	4797	4305
	3	1573	912	- -	- -	1726	996	2637	1907	3549	2819	4460	3730
	4	2091	1217	- -	- -	1388	423	2300	1335	3211	2246	4123	3157
	5	2625	1519	- -	- -	- -	- -	1967	744	2878	1655	3789	2566
	6	3144	1824	- -	- -	- -	- -	- -	- -	2540	1082	3452	1994
RP-BA-500-SR	2	1560	785	1590	803	2780	1990	3970	3180	5160	4380	6350	5570
	3	2340	1180	- -	- -	2380	1200	3570	2400	4760	3590	5960	4780
	4	3130	1570	- -	- -	1980	414	3180	1600	4370	2800	5560	3990
	5	3910	1960	- -	- -	- -	- -	2780	815	3970	2010	5160	3200
	6	4690	2360	- -	- -	- -	- -	- -	- -	3570	1220	4760	2410

Actuator Torque Output (In. Lbs.)

Telephone: **+44 (0)1772 323529** Email: **sales@dixoneurope.co.uk**

Aluminium Rack and Pinion Actuator

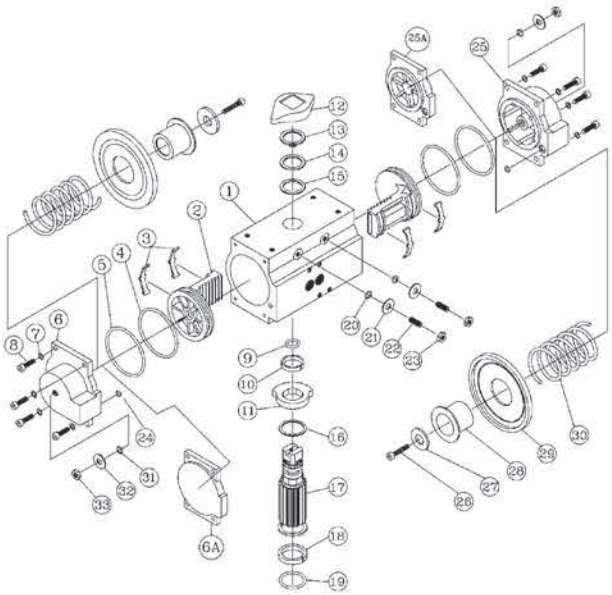

MATERIALS LIST				
ITEM	DESCRIPTION	MATERIAL	QTY	
			DA	SR
1	body	anodized aluminium	1	1
2	piston	alloy	2	2
3	piston bearing	die-cast aluminium	4	4
4	O-ring	alloy	2	2
5	O-ring	nylon	2	2
6	end cap (left)	Buna-N	n/a	1
6A	end cap (left)	Buna-N	1	n/a
7	washer	die-cast aluminium	8	8
8	cap screw	alloy	8	8
9	O-ring	die-cast aluminium	1	1
10	bearing	alloy	1	1
11	stop cam	stainless steel	1	1
12	position indicator	stainless steel	1	1
13	retaining ring	Buna-N	1	1
14	washer	nylon	1	1
15	bearing	carbon steel	1	1
16	retaining ring	polyethylene	1	1
17	pinion	stainless steel	1	1
18	bearing	stainless steel	1	1
19	O-ring	nylon	1	1
20	O-ring	stainless steel	2	2
21	washer	carbon steel	2	2
22	stop screw	nylon	2	2
23	nut	Buna-N	2	2
24	O-ring	Buna-N	2	2
25	end cap (right)	stainless steel	n/a	1
25A	end cap (right)	stainless steel	1	n/a
26	screw	stainless steel	n/a	2
27	washer	Buna-N	n/a	2
28	spring guide	die-cast aluminium	n/a	2
29	retainer	alloy	n/a	2
30	spring *	die-cast aluminium	n/a	4*
31	O-ring	alloy	n/a	2
32	washer	stainless steel	n/a	2
33	nut	stainless steel	n/a	2

* #4 spring set is standard

K

180° Aluminium Rack and Pinion Actuator

- NAMUR VDI/VDE 3845 and ISO 5211 dimensions on all sizes. No special blocks are required to mount solenoid valves, limit switches or positioners.
- The standard angle of rotation is 180°. Additional travel rotations of 120°, 135°, 150° are available. MA016 and larger sizes feature a travel stop with ± 10° adjustment in both open and close directions (International Patent).
- The 'patent pending' bottom plate design, unique to Dixon Hygienic secures a captive pinion (anti-blowout system) and permits flexibility in mounting by retaining AISI 304 nuts (standard) or AISI 304 bolts (optional) In either dual ISO patterns, or to customer dimensions
- All pinions are supplied with anti-blowout retention in both directions
- The female pinion drive Is standard with a double square output drive and optional with a double-D drive, keyed drive and designs to meet your specific requirements
- Shaft bearings isolate the pinion gear from the housing and support the shaft for high cycle applications
- The pinion teeth are engaged for the full length and stroke of the piston. The pinion height allows manual override without disturbing the position Indication
- Extruded aluminium body is internally machined and lapped to exact specifications. All internal and external surfaces are anodized for corrosion resistance
- External open/closed indicator Is standard, available for all rotations
- Pistons incorporate double wear pads to separate the rack from the actuator wall and serve as both guide and wear bearings
- Epoxy coated special steel springs are pre-loaded with non-metallic materials. The stainless steel end cap fasteners are extra long to allow for spring relaxation, all parts are corrosion resistant



Double Acting



Spring Return

- Air pressure operation from 40 to 150 PSI. Water, nitrogen and compatible hydraulic fluids may as be used to power the actuator
- All external fasteners are corrosion resistant stainless steel
- All units are permanently lubricated at the factory with non-silicone grease
- All units are externally stamped with a progressive traceable serial number
- 100% of all units are factory pressure and leak tested

SPECIFICATIONS	
Operating pressure range	40 to 120 PSIG / 2.75 - 8.25 BAR
Maximum allowable working pressure	150 PSIG / 10.35 BAR
Operating media	Dry or lubricated non-corrosive gas
Operating temperature standard	-40°F to 176°F
Piston and pinion lubrication	Non-silicone grease
Range of rotation adjustment	Between 170° and 190° / 40°C - 80°C
Valve and accessory mounting	Standard ISO 5211 bolt patterns
Output shaft	Female – Double square
Design	Twin rack and pinion
Factory testing cycles	1 million

180° Aluminium Rack and Pinion Actuator

Dimensions for Double Acting

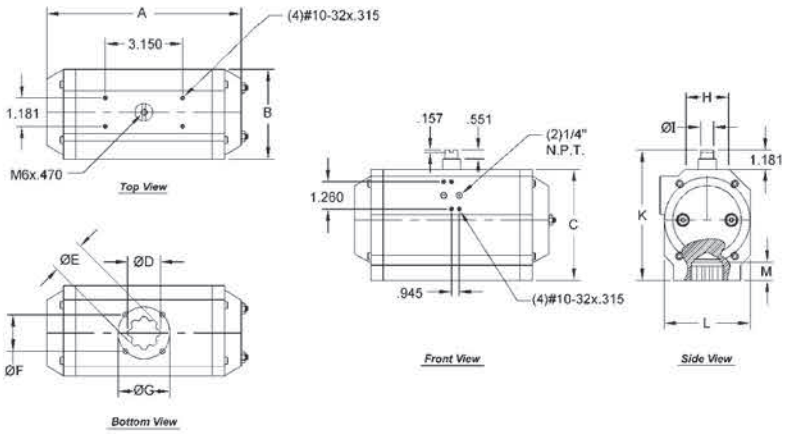

PART NO.	DIMENSIONS (inches)											
	A	B	C	D (mm)	E (mm)	F	G	H	I	K	L	M
RP-MA-012-DA	4.7	2.6	2.8	11	11	n/a	F04	1.9	0.5	4	2.1	0.5
RP-MA-016-DA	9.2	3.3	3.5	14	14	n/a	F05	1.7	0.5	4.8	2.8	0.7
RP-MA-017-DA	10.8	3.3	3.5	14	14	n/a	F05	1.7	0.5	4.8	2.8	0.8
RP-MA-021-DA	9.9	3.8	4.5	17	17	n/a	F07	1.8	0.6	5.6	3.4	0.9
RP-MA-026-DA	13	3.8	4.4	17	17	n/a	F07	1.8	0.8	5.6	3.4	0.9
RP-MA-031-DA	13	4.5	5.2	17	17	n/a	F07	2.3	0.8	6.4	4.1	0.9
RP-MA-036-DA	13.7	5.4	6.5	22	22	F07	F10	2.6	0.8	7.7	5.2	1.2
RP-MA-041-DA	15.8	5.4	6.5	22	22	F07	F10	2.6	1.1	7.7	5.2	1.2
RP-MA-046-DA	20	5.9	7	22	22	F07	F10	3	1.1	8.2	5.7	1.2
RP-MA-051-DA	19.6	7.3	8.5	27	27	n/a	F12	4	1.1	9.8	7.2	1.5
RP-MA-056-DA	23.9	7.3	8.5	27	27	n/a	F12	4	1.1	9.8	7.2	1.5

Dimensions for Spring Return

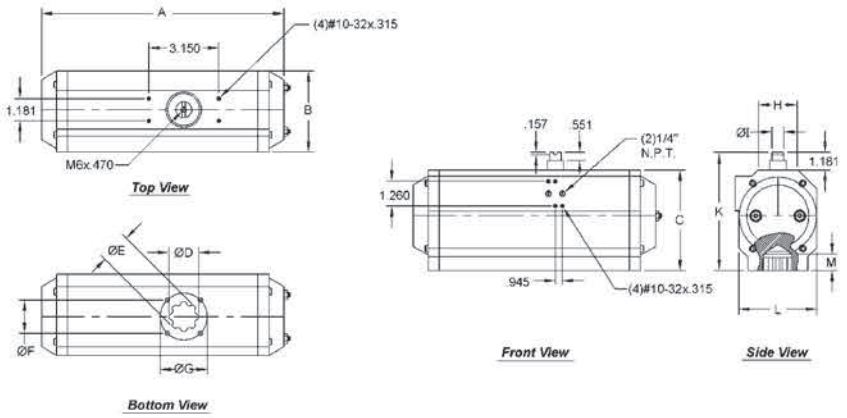

PART NO.	DIMENSIONS (inches)											
	A	B	C	D (mm)	E (mm)	F	G	H	I	K	L	M
RP-MA-015-SR	10.85	3.35	3.54	14	14	n/a	F05	1.70	0.50	4.76	2.76	0.70
RP-MA-017-SR	12.82	3.35	3.54	14	14	n/a	F05	1.70	0.50	4.76	2.76	0.80
RP-MA-020-SR	11.69	3.78	4.41	17	17	n/a	F07	1.80	0.60	5.63	3.39	0.90
RP-MA-025-SR	15.53	3.78	4.41	17	17	n/a	F07	1.80	0.80	5.63	3.39	0.90
RP-MA-030-SR	15.20	4.45	5.16	17	17	n/a	F07	2.30	0.80	6.38	4.09	0.90
RP-MA-035-SR	16.04	5.43	6.50	22	22	F07	F10	2.60	0.80	7.72	5.16	1.20
RP-MA-040-SR	18.80	5.43	6.50	22	22	F07	F10	2.60	1.10	7.72	5.16	1.20
RP-MA-045-SR	23.15	5.95	6.97	22	22	F07	F10	3.00	1.10	8.19	5.75	1.20
RP-MA-050-SR	23.41	7.28	6.97	27	27	n/a	F12	4.00	1.10	9.76	7.17	1.50
RP-MA-055-SR	27.70	7.28	8.54	27	27	n/a	F12	4.00	1.10	9.76	7.17	1.50

180° Aluminium Rack and Pinion Actuator

Technical Data

TORQUE RATINGS FOR SPRING RETURN ACTUATOR													
PART NO.	SPRING SET	OPENING TORQUE		CLOSING TORQUE									
				40 PSI / 2.76 BAR		60 PSI / 4.14 BAR		80 PSI / 5.52 BAR		100 PSI / 6.89 BAR		120 PSI / 8.27 BAR	
		START	END	START	END	START	END	START	END	START	END	START	END
RP-MA-015-SR	2+2	75	53	84	62	153	131	222	200	291	269	359	337
	3+3	112	81	56	25	125	94	194	163	263	232	331	300
	4+4	150	107	- -	- -	99	56	168	125	237	194	305	262
	5+5	187	134	- -	- -	72	19	141	88	210	157	278	225
	7+5	224	160	- -	- -	- -	- -	115	51	184	120	252	188
RP-MA-017-SR	2+2	93	64	116	87	206	177	296	267	386	357	476	447
	3+3	139	96	84	41	174	131	264	221	354	311	444	401
	4+4	185	128	- -	- -	142	85	232	175	322	265	412	355
	5+5	232	160	- -	- -	110	38	200	128	290	218	380	308
	7+5	278	192	- -	- -	- -	- -	168	82	258	172	348	262
RP-MA-020-SR	2+2	122	92	158	128	283	253	408	378	533	503	658	628
	3+3	184	138	112	66	237	191	362	316	487	441	612	566
	4+4	245	184	66	5	191	130	316	255	441	380	566	505
	5+5	307	230	- -	- -	145	68	270	193	395	318	520	443
	7+5	369	278	- -	- -	97	6	222	131	347	256	472	381
RP-MA-025-SR	2+2	196	124	251	179	438	366	626	554	813	741	1001	929
	3+3	294	185	190	81	377	268	565	456	752	643	940	831
	4+4	392	247	- -	- -	315	170	503	358	690	545	878	733
	5+5	490	309	- -	- -	253	72	441	260	628	447	816	635
	7+5	588	372	- -	- -	- -	- -	378	162	565	349	753	537
RP-MA-030-SR	2+2	251	187	313	249	563	499	813	749	1063	999	1313	1249
	3+3	376	280	220	123	470	374	720	624	970	874	1220	1124
	4+4	502	374	- -	- -	376	248	626	498	876	748	1126	998
	5+5	627	467	- -	- -	283	123	533	373	783	623	1033	873
	7+5	753	560	- -	- -	- -	- -	440	247	690	497	940	747
RP-MA-035-SR	2+2	412	306	494	388	894	788	1294	1188	1694	1588	2094	1988
	3+3	617	461	339	183	739	583	1139	983	1539	1383	1939	1783
	4+4	824	614	- -	- -	586	376	986	776	1386	1176	1786	1576
	5+5	1029	767	- -	- -	433	171	833	571	1233	971	1633	1371
	7+5	1236	921	- -	- -	- -	- -	679	364	1079	764	1479	1164
RP-MA-040-SR	2+2	505	371	629	495	1129	995	1629	1495	2129	1995	2629	2495
	3+3	757	556	444	243	944	743	1444	1243	1944	1743	2444	2243
	4+4	1011	741	- -	- -	759	489	1259	989	1759	1489	2259	1989
	5+5	1263	929	- -	- -	572	237	1072	737	1572	1237	2072	1737
	7+5	1516	1113	- -	- -	- -	- -	887	484	1387	984	1887	1484
RP-MA-045-SR	2+2	890	560	1002	672	1784	1454	2565	2235	3346	3016	4127	3797
	3+3	1334	840	722	228	1504	1010	2285	1791	3066	2572	3847	3353
	4+4	1779	1120	- -	- -	1224	565	2005	1346	2786	2127	3567	2908
	5+5	2224	1399	- -	- -	945	120	1726	901	2507	1682	3288	2463
	7+5	2669	1679	- -	- -	- -	- -	1446	456	2227	1237	3008	2018
RP-MA-050-SR	2+2	1101	869	1381	1149	2506	2274	3631	3399	4756	4524	5881	5649
	3+3	1652	1304	946	598	2071	1723	3196	2848	4321	3973	5446	5098
	4+4	2203	1738	512	47	1637	1172	2762	2297	3887	3422	5012	4547
	5+5	2754	2173	- -	- -	1202	621	2327	1746	3452	2871	4577	3996
	7+5	3303	2607	- -	- -	768	72	1893	1197	3018	2322	4143	3447
RP-MA-055-SR	2+2	1487	1055	1945	1513	3445	3013	4945	4513	6445	6013	7945	7513
	3+3	2231	1583	1417	769	2917	2269	4417	3769	5917	5269	7417	6769
	4+4	2974	2111	889	26	2389	1526	3889	3026	5389	4526	6889	6026
	5+5	3718	2638	- -	- -	1862	782	3362	2282	4862	3782	6362	5282
	7+5	4462	3166	- -	- -	1334	38	2834	1538	4334	3038	5834	4538

Actuator Torque Output (In. Lbs.)

Electric Actuation







Features

- Conforms to CSA-C for outdoor use
- Built by an ISO9001 certified manufacturer

Enclosure

- Lightweight powder coated aluminium alloy with plastic cover
- NEMA 4 and 4X waterproof and dust proof
- ROHS compliant

Motor

- Extended duty cycle induction motor
- H-insulation class OM-1 and OM-A Class F on OM-2 to OM-4
- Built in thermal protection prevents motor burn out
- Includes position indicators on top of unit

Manual Override

- Non-clutch design allows manual operation in a power outage
- Fail-safe does not allow manual operation when electric motor is operating
- Some units feature a hand wheel for manual operation
- Optional battery back-up available

High alloy steel gear train

- Provides self-locking function to avoid valve back drive
- Factory installed high temperature lubricant, reduces maintenance

Additional Features

- Tested to one million cycles
- One year manufacturer's warranty
- All units include heater to reduce condensation

Electric Actuation

Dimensions

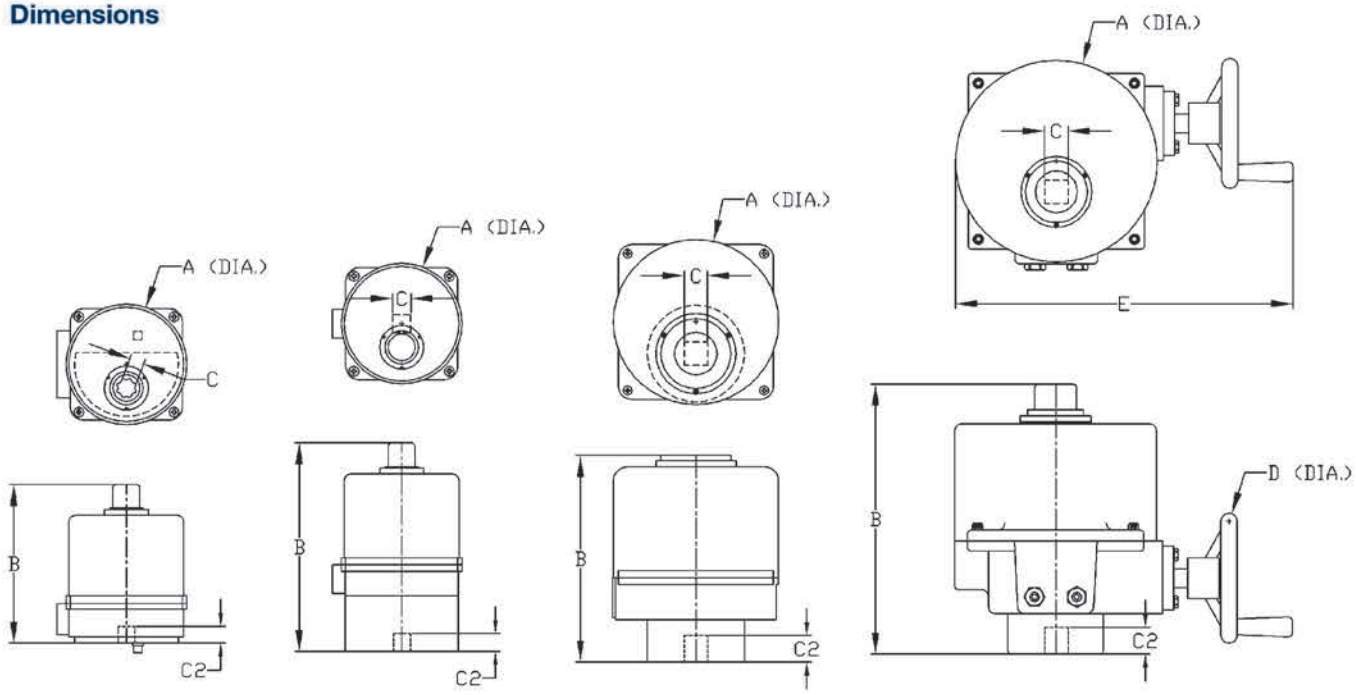

BEOM-1 | BEOM-A | BEBM-2 | BEOM-2 BEOM-3 BEOM-4

PART NO.	INCHES (MM)						FLANGE TYPE
	A Ø	B	C SQ MAXIMUM	C2 DEPTH	D Ø	E	
BEOM-1	4.5 (114)	6.1 (155)	0.6 (14)	0.6 (15)	- - -	- - -	F03 / F05
BEOM-A	4.5 (114)	8.0 (203)	0.7 (17)	0.6 (16)	- - -	- - -	F07
BEBM-2	6.1 (154)	7.6 (192)	0.9 (22)	1.2 (30)	- - -	- - -	F07
BEOM-2 BEOM-3	7.1 (180)	10.0 (255)	0.9 (22)	1.2 (30)	4.8 (123)	12.8 (326)	F07
BEOM-4	8.5 (217)	12.5 (317)	1.4 (35)	1.6 (40)	7.6 (194)	15.5 (394)	F10

Telephone: **+44 (0)1772 323529** Email: **sales@dixoneurope.co.uk**

Dixon Seat Valves

The Dixon SV-series single seat valves offer a true hygienic design to meet your most demanding process applications. The SV-series valves are offered in 316L stainless steel with a variety of body configurations and seat and stem seal materials to fit your specific needs. This valve series is designed to shut off or divert the flow in your process either remotely by using air or locally using a manual operating device. The rugged design of the actuator and valve body allow the valve to stand up to the harsh environments often found in the sanitary industry.

Product Specifications

Size range: 1", 1½", 2", 2½", 3"

Materials:
- Body - 316 stainless steel
- Actuator - 316 stainless steel
- Manual Operating Device - 316 stainless steel
- Stem Seal - EPDM, silicone, Viton®
- Seat Seal - EPDM, silicone, Viton



Options:
- Manual
- Actuated (spring return, double acting)
- Control Tops

Body Types:
- L, T, Y, F, L/L, T/L, L/T, T/T, Tank Bottom



Technical Data:
- Temperature range -45°C (-50°F) to 100°C (212°F)
- Surface Finish <32Ra standard
- Max product pressure
  - 1" to 1½" 450 PSI
  - 2" 400 PSI
  - 2½" to 3" 350 PSI
- Air pressure 80 to 145 PSI
- Air connections 1/8" FNPT

L











SV-Series I & O Manual can be viewed/downloaded at dixonvalve.com.
This manual covers the complete line of valves including videos on assembly and disassembly of all valves.

Ordering Information

Valve Series (1-2)	Type (3)	Body Config. (4)	Ports (5)	Size (6-7)	Actuator (8)	Seat Material (9)	Control Top (10)	Switches (11)	Solenoid (12) *	Communication (13)	Conduit Connectors (14)	Options (15)
SV Seat Valve	S Shut Off	A T	C Clamp	10 1"	A Manual	A PTFE seats / FKM seals	N None	N None	N None	N None	N None	N None
	D Divert	B L	B Buttweld	15 1.5"	B Spring Return (Air To Raise)	B Buna	B Basic Control Top	M Mechanical	1 120V AC Standard	A Device Net	1 (1) M12 Poly Cable Gland	A Tank, up to open
	T Tank Bottom	C Y	F Female I-Line	20 2"	C Spring Return (Air To Lower)	E EPDM	C Communication Module	P Proximity	2 24V DC 3W Standard	B Foundation Fieldbus	2 (2) ½" NPT	B Tank, up to close
		D Tank	M Male I-Line	25 2.5"	D Double Acting	P PTFE seats / EPDM seals		S Solid State	3 3-Way Piezo	C Foundation Field-bus (Externally Powered)	3 (2) M20	
		E F	T Threaded Bevel	30 3"		V FKM		R Namur	4 3-Way Poppet Style 24V DC 1.8W	D Modbus	4 (2) Cable Glands	
		F L-L	P Plain Bevel	40 4"					5 3-Way Poppet Style 120V AC 7.2W	E As-Interface	5 (1) 5 Pin Connector	
		G T-L	Q Q-Line	60 6"					6 3-Way Poppet Style 24V DC 0.5W	F As-Interface (W/ Extended Addressing)	6 (1) 4 Pin Connector	
		H L-T	J John Perry Plain						7 3-Way Intrinsically Safe 12V DC		7 (2) 4 Pin Connectors	
		I T-T	H John Perry Threaded									
			E Extended Weld									
			Z Combination (Add Note)									
			A Female NPT									

L

Body Configurations

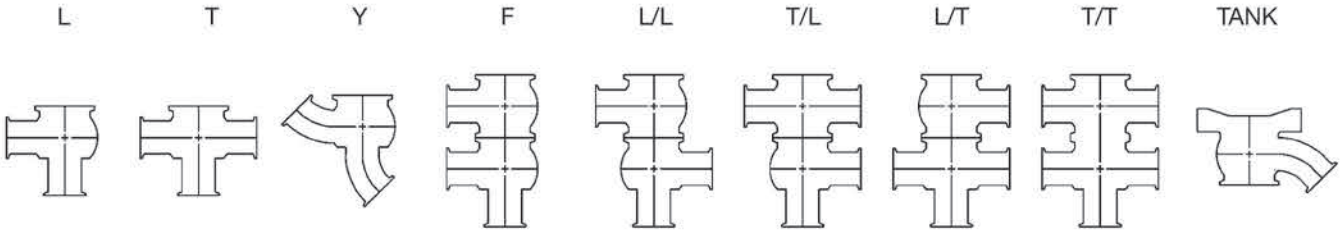

Telephone: **+44 (0)1772 323529** Email: **sales@dixoneurope.co.uk**

Holding Pressure (PSI)

Spring to Raise

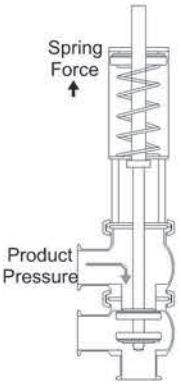

Dwg. 1

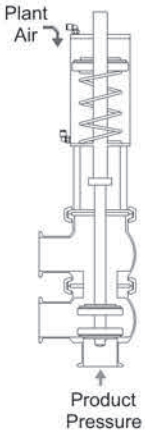

Dwg. 2

Spring to Lower

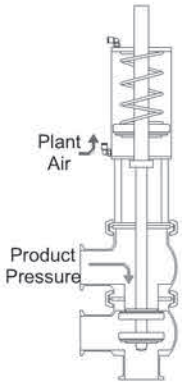

Dwg. 3

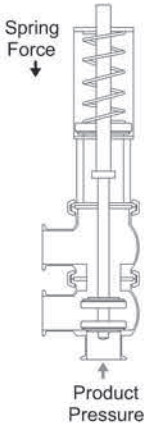

Dwg. 4

Double Acting

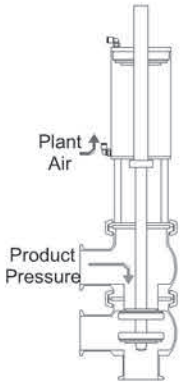

Dwg. 5

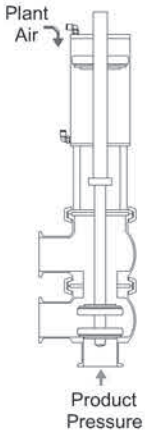

Dwg. 6

Illustration of seating surface, product pressure direction, air pressure location and direction of spring force.

		DRAWING 1	DRAWING 2		DRAWING 3		DRAWING 4	DRAWING 5		DRAWING 6	
Plant Air Supply (PSI)		NA	80	120	80	120	NA	80	120	80	120
Seating Surface		Upper	Lower		Upper		Lower	Upper		Lower	
Actuator Function		B	B		C		C	D		D	
1"	Elastomer	100	100	100	100	100	100	130	130	130	130
	PTFE	95	95	95	95	95	95	125	125	125	125
1½"	Elastomer	75	75	100	75	75	100	115	115	115	115
	PTFE	65	65	90	65	65	90	110	110	110	110
2"	Elastomer	75	68	83	75	75	70	115	115	115	115
	PTFE	65	58	73	65	65	60	110	110	110	120
2½"	Elastomer	60	55	68	55	55	50	125	125	125	125
	PTFE	50	45	58	45	45	45	120	120	120	120
3"	Elastomer	60	55	68	55	55	50	125	125	125	125
	PTFE	50	45	58	45	45	45	120	120	120	120
4"	Elastomer	60	55	68	55	55	50	110	110	110	110
	PTFE	50	45	58	45	45	45	100	100	100	100

Actuator function codes:

B - spring to raise
C - spring to lower
D - double acting (air to air)

Pressure Drop Flow Paths

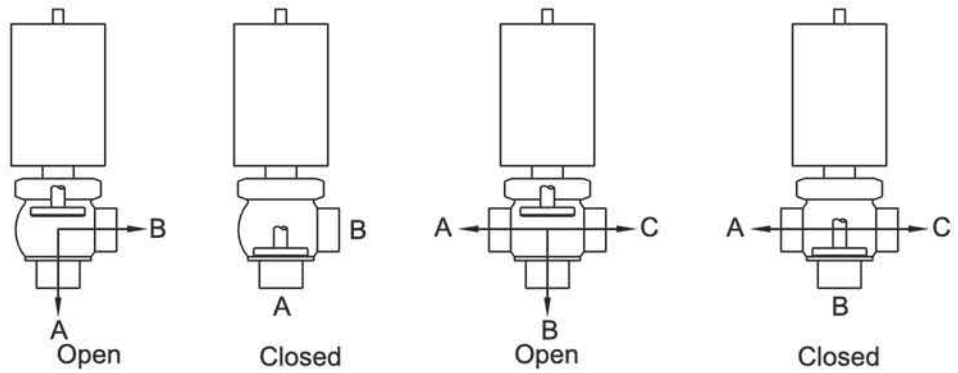

L-Body **T-Body**

1" = Red, 1½" = Blue, 2" = Black, 2½" = Green, 3" = Purple, 4" = Orange

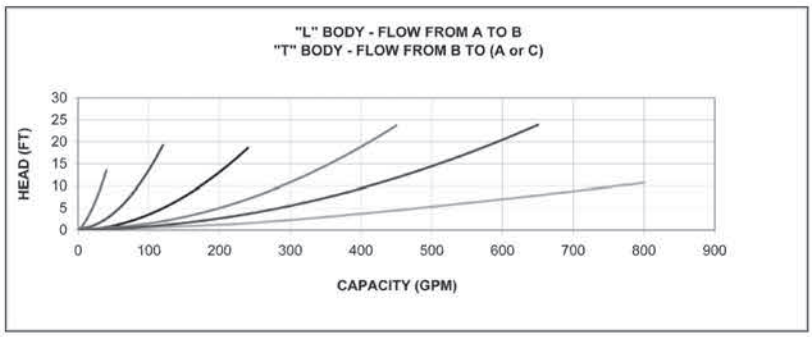

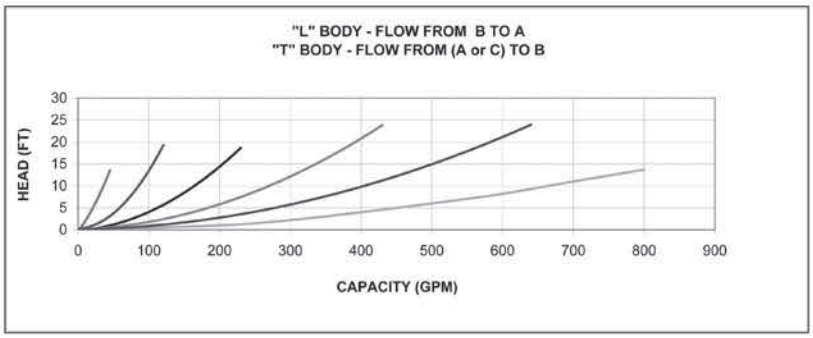

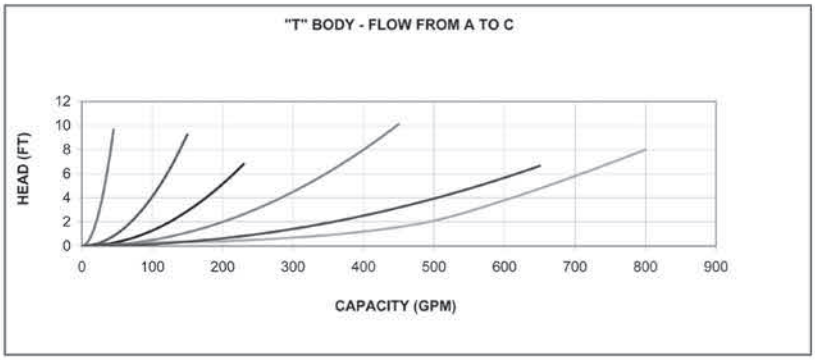

L

Telephone: **+44 (0)1772 323529** Email: **sales@dixoneurope.co.uk**

Pressure Drop Flow Paths

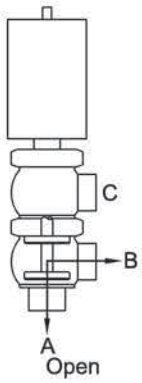

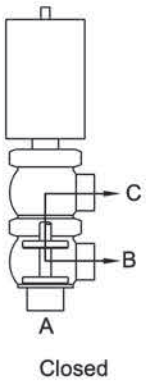

F-Body

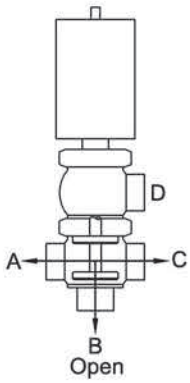

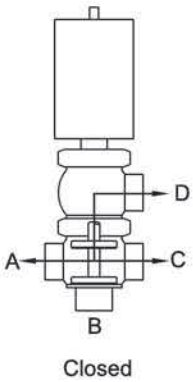

L/T-Body

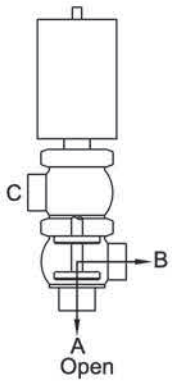

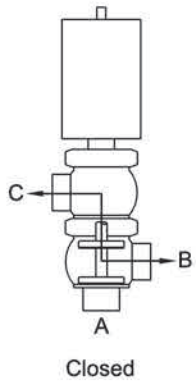

L/L-Body

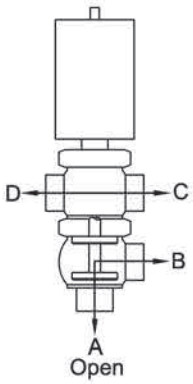

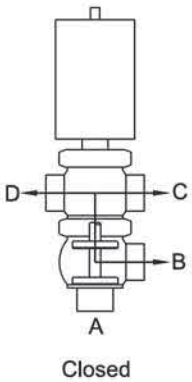

T/L-Body

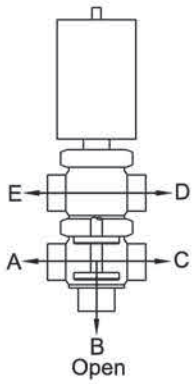

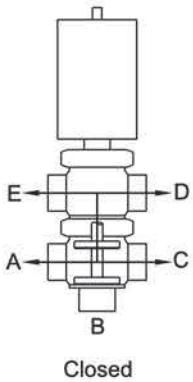

T/T-Body

1" = Red, 1½" = Blue, 2" = Black, 2½" = Green, 3" = Purple, 4" = Orange

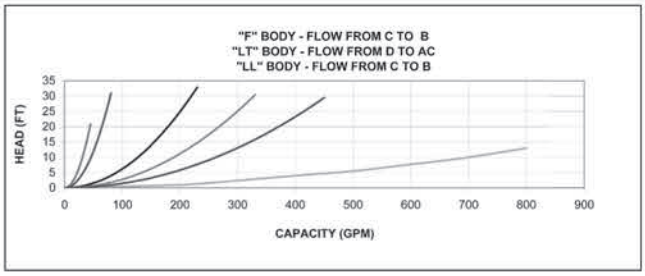

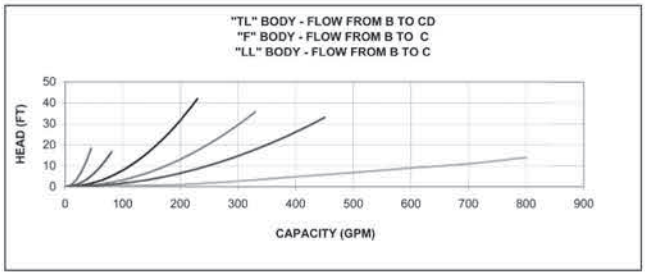

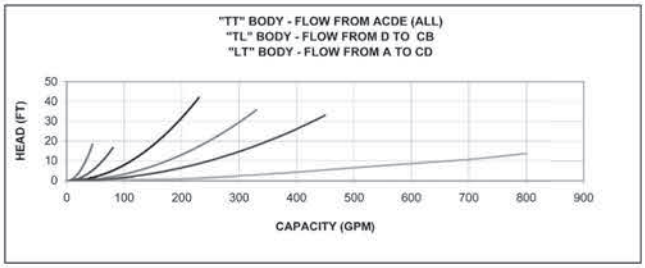

Double Body with Actuator

Clamp

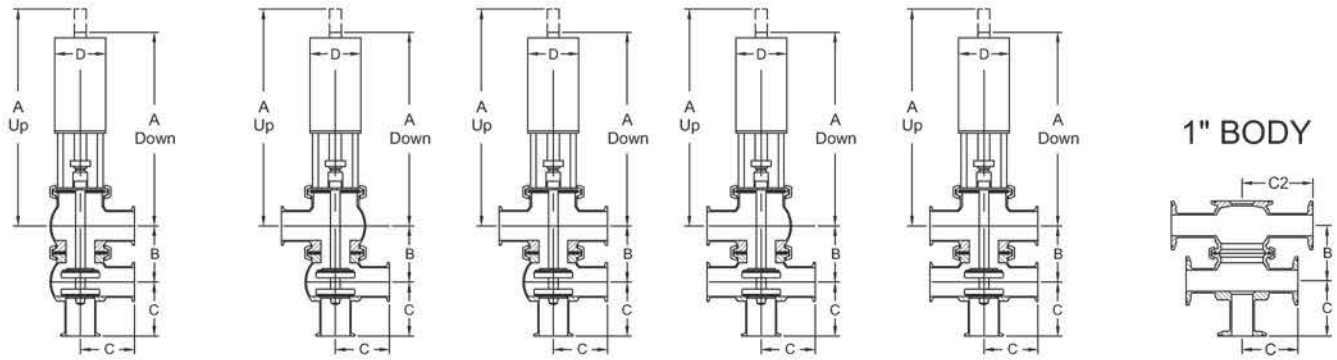

Weld

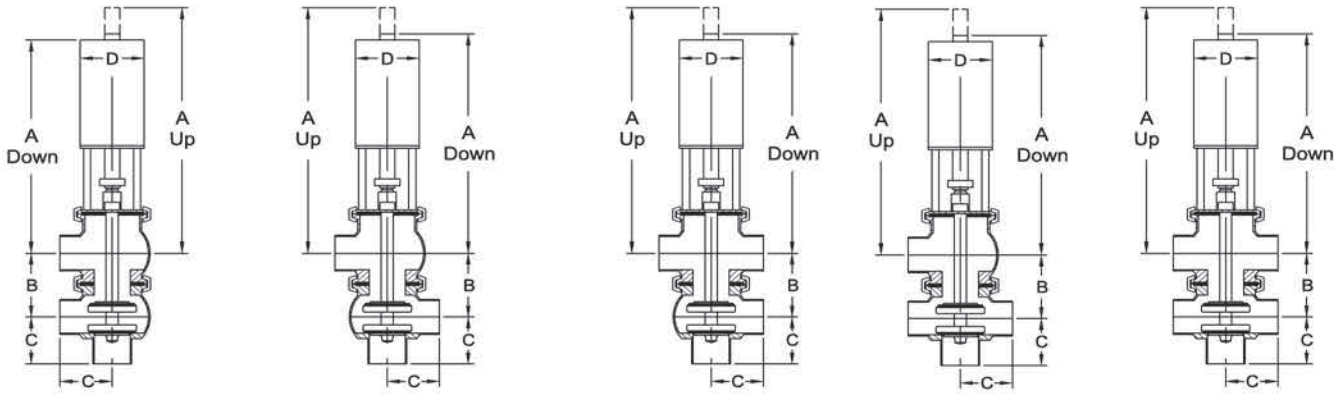

L

SIZE	A (DOWN)	A (UP)	B	C (CLAMP)	C (WELD)	C2	D
1"	153.67	169.93	56.64	63.50	50.80	81.28	59.94
1½"	289.81	314.96	80.01	69.85	57.15	-	85.09
2"	296.42	321.31	92.46	88.90	76.20	-	85.09
2½"	365.76	397.76	119.89	88.90	76.20	-	133.10
3"	368.30	404.88	128.02	95.25	82.55	-	133.10
4"	383.54	410.72	150.88	114.30	98.30	-	133.10

Telephone: **+44 (0)1772 323529** Email: **sales@dixoneurope.co.uk**

Single Body with Actuator

Clamp

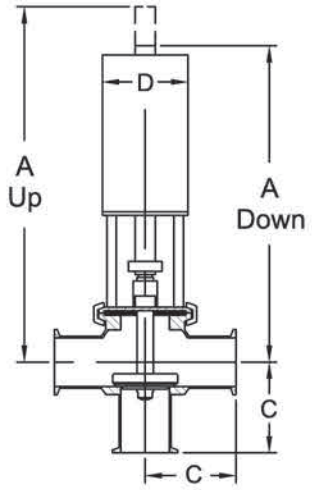

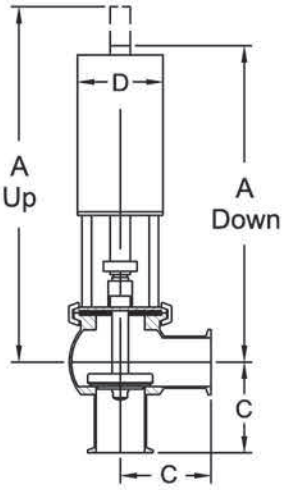

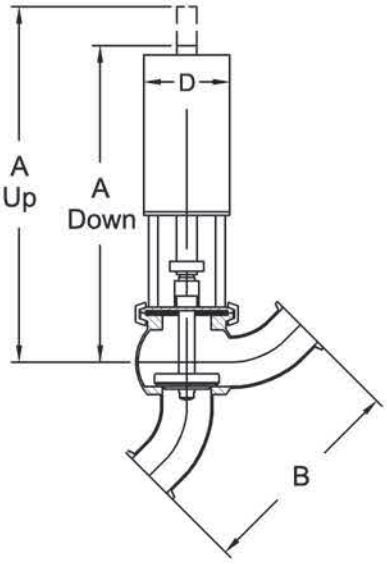

Weld

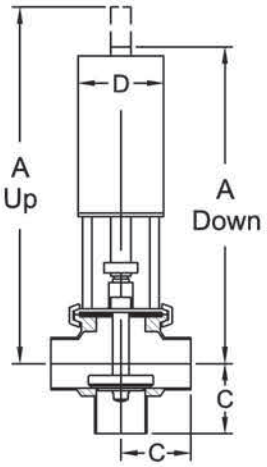

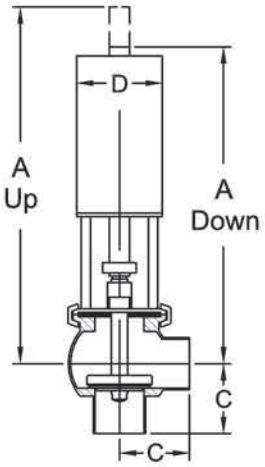

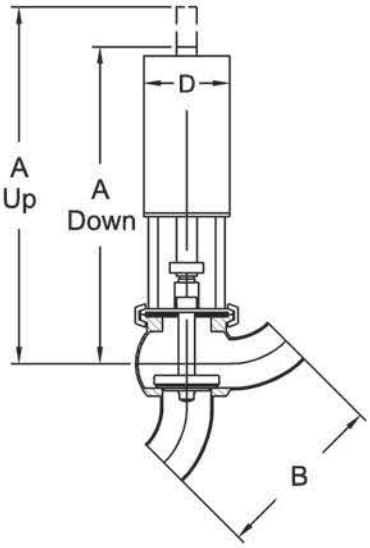

SIZE	A (DOWN)	A (UP)	C (CLAMP)	C (WELD)	D	B (Y-BODY) CLAMP	B (Y-BODY) WELD
1"	153.67	169.93	63.50	50.80	59.94	121.41	96.01
1½"	35.81	314.96	69.85	57.15	85.09	167.64	142.24
2"	296.42	321.31	88.90	76.20	85.09	194.06	168.66
2½"	365.76	397.76	88.90	76.20	133.10	236.98	211.58
3"	368.30	404.88	95.25	82.55	133.10	270.00	244.60
4"	383.54	410.72	114.30	98.30	133.10	334.77	303.02

Dimensions

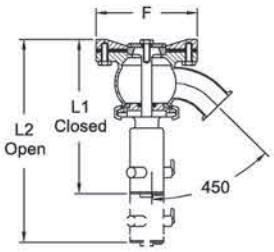

Tank Body with Manual Handle

SIZE(IN)	L1	L2	F
1"	181.10	211.07	109.98
1½"	232.92	267.97	139.95
2"	242.06	277.11	150.11
2½"	288.04	332.99	180.09
3"	299.97	344.93	199.90
4"	N/A	N/A	N/A

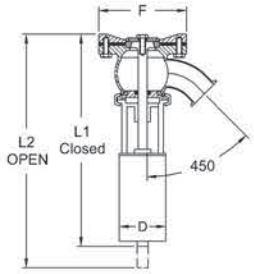

Tank Body With Actuator

SIZE(IN)	L1	L2	F	D
1"	189.99	219.96	109.98	59.94
1½"	354.08	388.87	139.95	85.09
2"	359.92	394.97	150.11	85.09
2½"	446.02	490.98	180.09	133.10
3"	450.09	495.05	199.90	133.10
4"	N/A	N/A	N/A	N/A

Valves With Actuator And CT Series Control Top

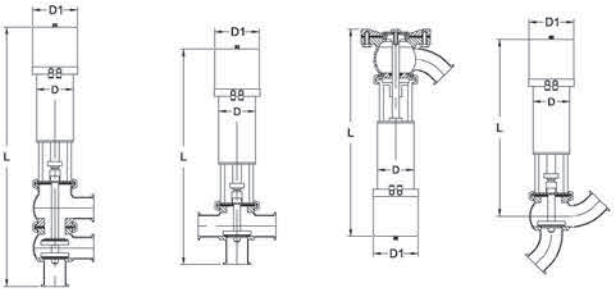

Double Body Single Body Tank Y-Body

			DOUBLE BODY	SINGLE BODY	TANK	Y-BODY
Size(In)	D1	D	L			
1"	103.89	59.94	384.81	330.20	320.04	262.64
1½"		85.09	544.58	464.82	472.44	396.24
2"		85.09	581.91	490.22	512.32	402.59
2½"		133.10	685.80	565.66	517.91	469.90
3"		133.10	702.31	574.04	517.91	472.44
4"		133.10	759.46	635.00	-	487.68

Valves With Actuator And CM Series Control Module

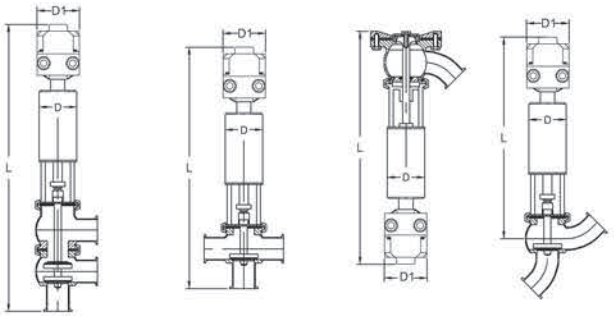

Double Body Single Body Tank Y-Body

			DOUBLE BODY	SINGLE BODY	TANK	Y-BODY
Size(In)	D1	D	L			
1"	103.89	59.94	445.77	389.64	381.00	323.85
1½"		85.09	625.60	545.85	553.47	477.01
2"		85.09	594.61	571.25	557.28	483.62
2½"		133.10	662.94	646.68	598.93	550.93
3"		133.10	783.34	655.07	598.93	553.47
4"		133.10	807.47	656.59	-	568.71

Telephone: **+44 (0)1772 323529** Email: **sales@dixoneurope.co.uk**

Double Body with Manual Handle

Clamp

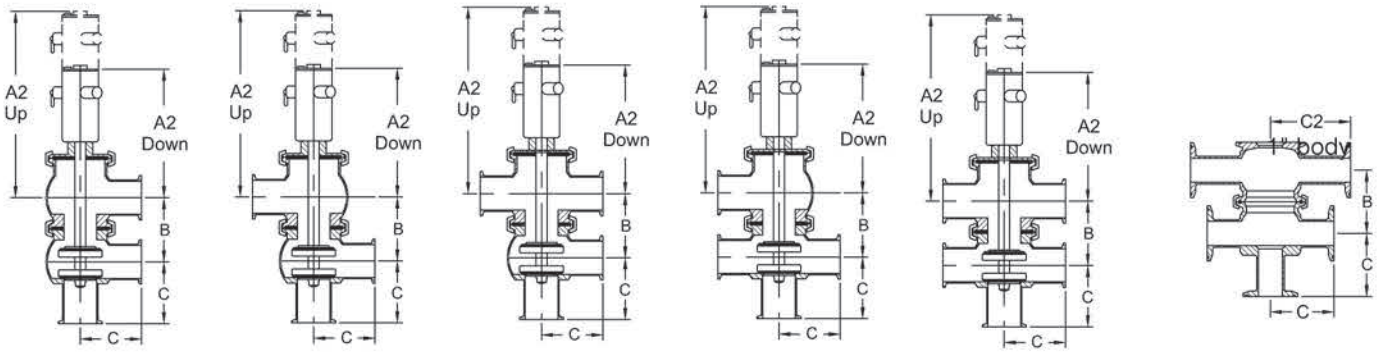

Weld

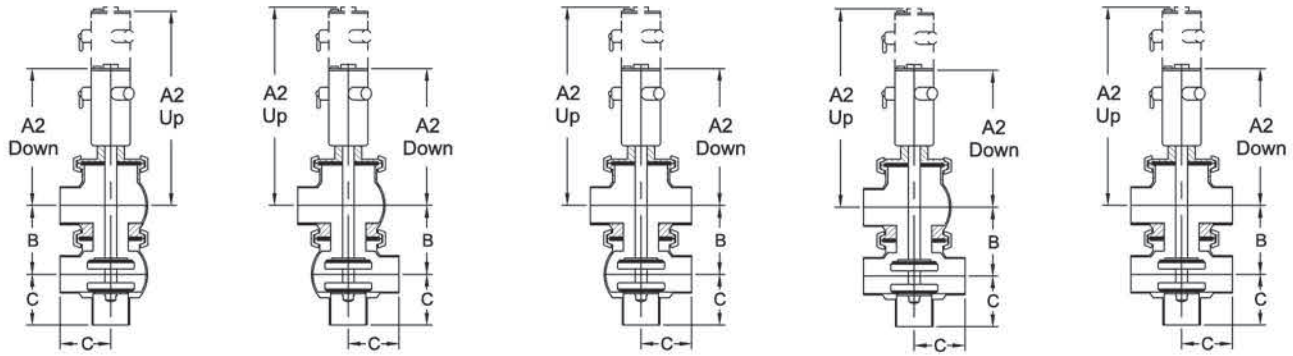

SIZE	A2 (DOWN)	A2 (UP)	B	C (CLAMP)	C (WELD)	C2
1"	101.09	118.11	56.64	63.50	50.80	81.28
1½"	125.98	150.88	80.01	69.85	57.15	-
2"	134.87	160.02	92.46	88.90	76.20	-
2½"	166.88	198.88	119.89	88.90	76.20	-
3"	169.93	205.99	128.02	95.25	82.55	-

Single Body with Manual Handle

Clamp

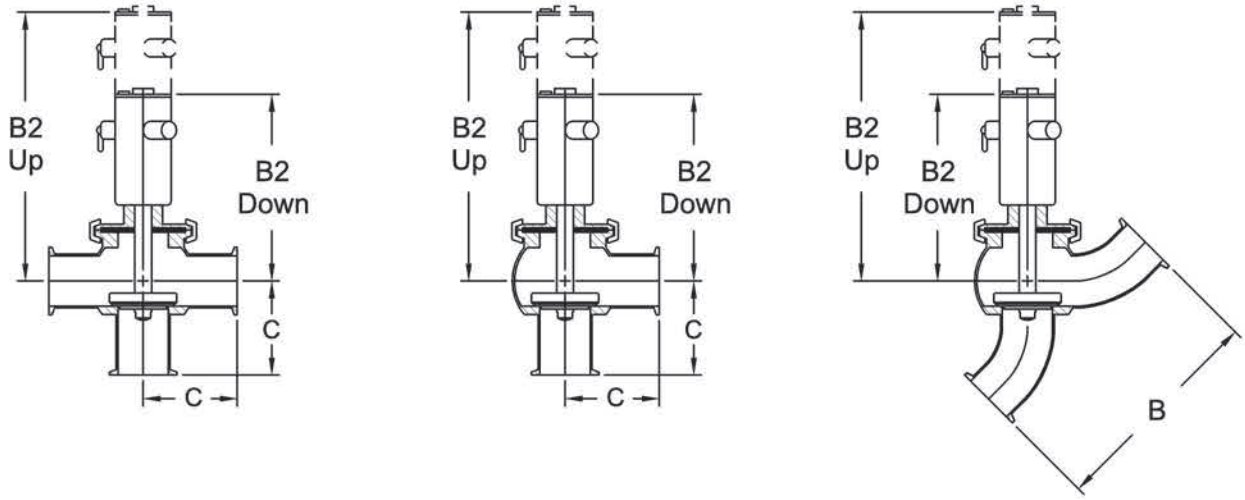

Weld

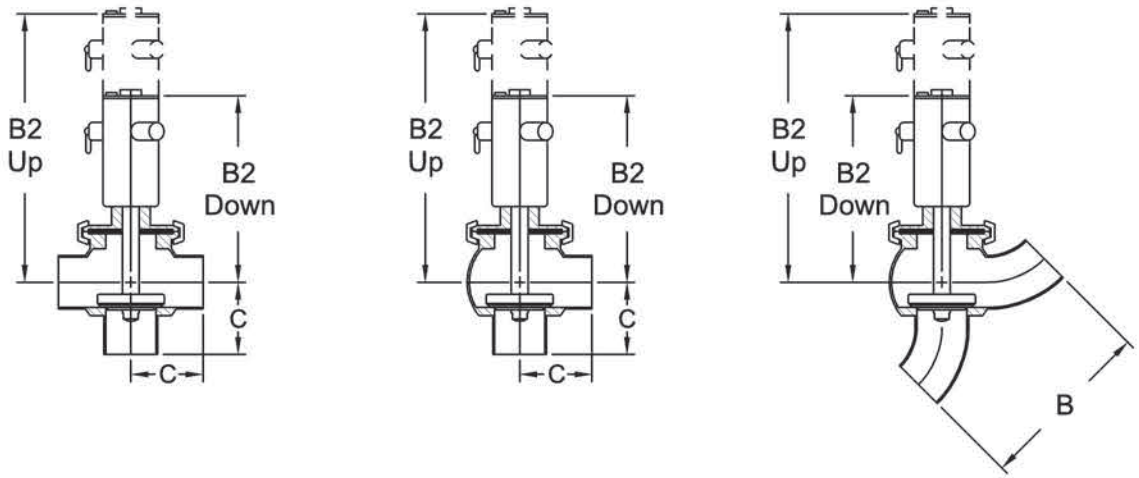

SIZE	B2 (DOWN)	B2 (UP)	C (CLAMP)	C (WELD)	B (Y-BODY) CLAMP	B (Y-BODY) WELD
1"	101.09	123.95	63.50	50.80	121.41	96.01
1½"	125.98	161.04	69.85	57.15	167.64	142.24
2"	134.87	169.93	88.90	76.20	194.06	168.66
2½"	166.88	216.92	88.90	76.20	236.98	211.58
3"	169.93	219.96	95.25	82.55	270.00	244.60

Seat Valve Bill of Materials A3

(Standard Materials)

Single Body

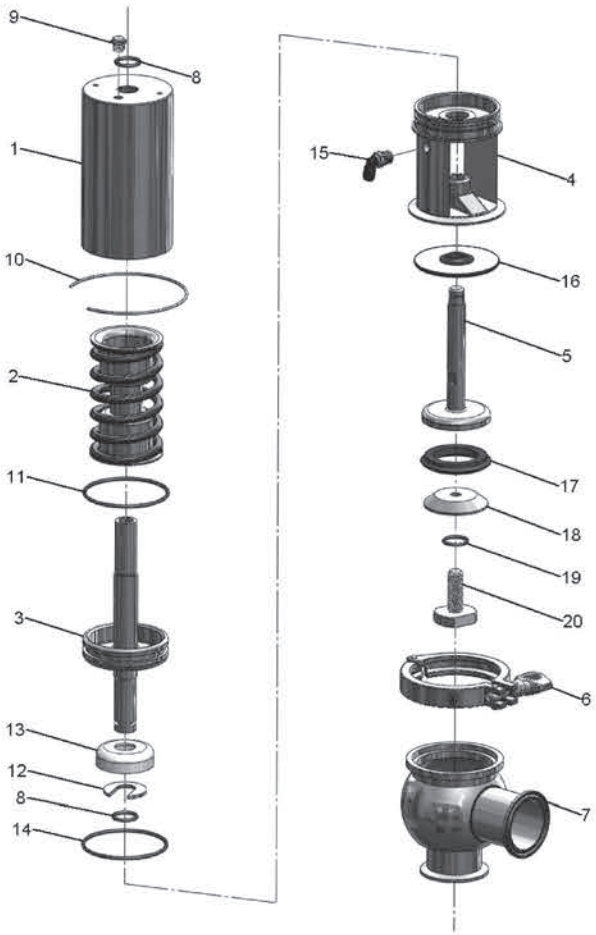

ITEM #	DESCRIPTION	MATERIAL	QUANTITY	
			SPRING RETURN	DOUBLE ACTING
1	Actuator Body	304 SS	1	1
2	Spring	304 SS	1	0
3	Actuator Piston	304 SS	1	1
4	Adapter	304 SS	1	1
5	Valve Stem	316L	1	1
6	Single Pin Clamp	304 SS	1	1
7	Valve Body - Lower	316L	1	1
8	Stem O-Ring *	EPDM	2	2
9	Filter	Nickel Plated Brass	1	0
10	Actuator Adapter Wire Clip	304 SS	1	1
11	Piston O-Ring	EPDM	1	1
12	Stem U-Clip	304 SS	1	1
13	Actuator Ring	PTFE	1	1
14	Adapter O-Ring	EPDM	1	1
15	Air Fitting	Nickel Plated Brass	1	2
16	Lip Seal *	304/EPDM	1	1
17	Seat Seal Ring *	EPDM	1	1
18	Seat Washer	316L	1	1
19	Seat Bolt O-Ring *	EPDM	1	1
20	Seat Bolt	316L	1	1

Seat Valve Bill of Materials A3

(Standard Materials)

Double Body

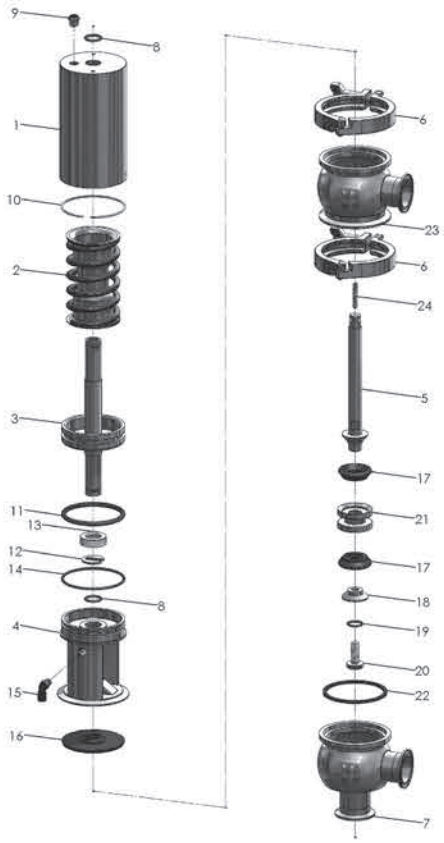

ITEM #	DESCRIPTION	MATERIAL	QUANTITY	
			SPRING RETURN	DOUBLE ACTING
1	Actuator Body	304 SS	1	1
2	Spring	304 SS	1	0
3	Actuator Piston	304 SS	1	1
4	Adapter	304 SS	1	1
5	Valve Stem	316L	1	1
6	Single Pin Clamp	304 SS	2	2
7	Valve Body - Lower	316L	1	1
8	Stem O-Ring *	EPDM	2	2
9	Filter	Nickel Plated Brass	1	0
10	Actuator Adapter Wire Clip	304 SS	1	1
11	Piston O-Ring	EPDM	1	1
12	Stem U-Clip	304 SS	1	1
13	Actuator Ring	PTFE	1	1
14	Adapter O-Ring	EPDM	1	1
15	Air Fitting	Nickel Plated Brass	1	2
16	Lip Seal *	304/EPDM	1	1
17	Seat Seal Ring *	EPDM	2	2
18	Seat Washer	316L	1	1
19	Seat Bolt O-Ring *	EPDM	1	1
20	Seat Bolt	316L	1	1
21	Stem Gland	316L	1	1
22	Valve Body Seal Ring *	EPDM	1	1
23	Valve Body - Upper	316L	1	1
24	Set Screw	304SS	1	1

*** wetted repair parts**

Seat Valve Check List

Contact Name: _____ Company Name: _____

Date: _____ Phone _____ Email: _____

Customer ID#: _____

PROCESS BACKGROUND

Process Temp: _____ CIP Temperature: _____

Product _____ Plant Air Supply (PSI): _____

Product Pressure: _____

TYPE/SIZE

Shut Off: ☐ Divert: ☐ Tank: ☐

1" ☐ 1½" ☐ 2" ☐ 2½" ☐ 3" ☐ 4" ☐ Other ☐

L ☐ T ☐ Y ☐ F ☐ L/L ☐ T/L ☐ L/T ☐ T/T ☐ Tank ☐

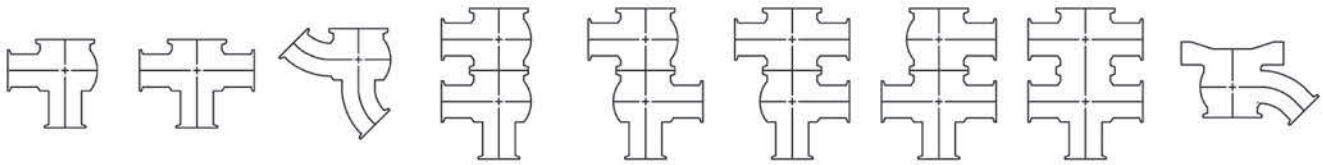

CONNECTIONS

Clamp: ☐ Combination: ☐ Weld: ☐ Other: _____

SEAT MATERIAL

EPDM: ☐ FKM: ☐ PTFE w/EPDM: ☐ Buna: ☐ PTFE w/FKM: ☐

ACTUATOR

Manual: ☐ Pneumatic Double Acting: ☐ Tank Up Open: ☐ Pneumatic Spring Return Air Up: ☐

Pneumatic Spring Return Air Down: ☐ Tank Up Close: ☐

CONTROLS

None: ☐ Basic Control Top: ☐ Communication Module: ☐

SWITCH TYPE

None: ☐ Proximity For Basic Top: ☐ Mechanical For Basic Top: ☐

Namur For Communication Top: ☐ Solid State For Communication Top: ☐

SOLENOID/COMMUNICATION/CONDUIT CONNECTION

Solenoid: ☐ Conduit: ☐

OPTIONS

SPECIAL INSTRUCTIONS (BODY CONFIGURATIONS)

CT-Series Control Top

The Dixon CT series control top mounts directly to the SV series spring return actuator offering two position feedback and control

- Nema 4/4X water proof / dust proof class IP 67 enclosure
- 304SS enclosure
- 110VAC and 24VDC solenoid options
- Mechanical and proximity (PNP, NPN, NO & NC) switching options

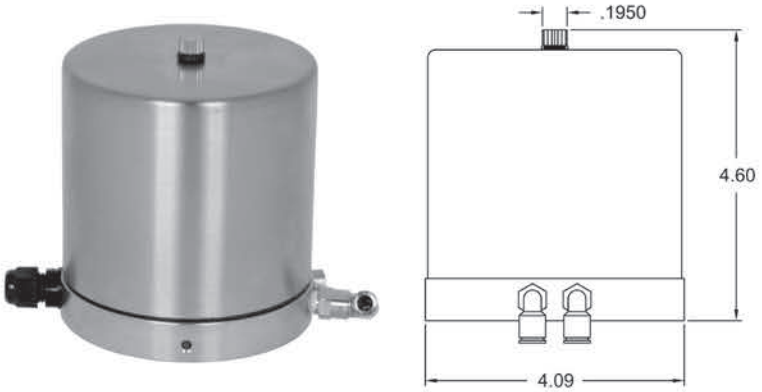

PART NO.	Description
SV-CT1	Micro Switch 24Vdc, Air To Lower
SV-CT2	Prox Npn Nc 24Vdc, Air To Lower
SV-CT3	Prox Npn No 24Vdc, Air To Lower
SV-CT4	Prox Pnp Nc 24Vdc, Air To Lower
SV-CT5	Prox Pnp No 24Vdc, Air To Lower
SV-CT6	Micro Switch 24Vdc, Air To Rise
SV-CT7	Prox Npn Nc 24Vdc, Air To Rise
SV-CT8	Prox Npn No 24Vdc, Air To Rise
SV-CT9	Prox Pnp Nc 24Vdc, Air To Rise
SV-CT10	Prox Pnp No 24Vdc, Air To Rise
SV-CT11	Micro Switch 110Vac, Air To Lower
SV-CT12	Prox Npn Nc 110Vac, Air To Lower
SV-CT13	Prox Npn No 110Vac, Air To Lower
SV-CT14	Prox Pnp Nc 110Vac, Air To Lower
SV-CT15	Prox Pnp No 110Vac, Air To Lower
SV-CT16	Micro Switch 110Vac, Air To Rise
SV-CT17	Prox Npn Nc 110Vac, Air To Rise
SV-CT18	Prox Npn No 110Vac, Air To Rise
SV-CT19	Prox Pnp Nc 110Vac, Air To Rise
SV-CT20	Prox Pnp No 110Vac, Air To Rise

CM-Series Control Top



The CM Series Control Top Communication Module, designed for corrosive process environments, attaches directly to the Dixon Divert Valves. This platform offers a full array of communication and switching options as well as discrete integral pneumatic control for spring return actuator operation.

L

Features and Benefits:

- The CM Series may be washed down and temporarily submersed with no adverse affects. It is rated NEMA 4, 4x, and 6. It may be used in Div. 2/Zone 2 areas (Nonincendive) or Div.1/Zones 0 & 1 (Intrinsically Safe) hazardous applications
- Enclosure features high strength polycarbonate with excellent corrosion resistance and exceptional temperature stability
- Visual electronic and mechanical position indication confirm valve and switch status for added safety
- Solid state proximity sensors monitor Open/Closed discrete valve position with precision and reliability
- Integral pneumatic valve is isolated from environmental contamination, offers high tolerance to dirty air and enables rapid valve operation
- Solenoid options available for 120VAC and 24VDC. Select Piezo option for bus powered Foundation Fieldbus Applications
- Self Adjusting triggering system provides consistent Open and Closed indication. No resetting is required
- Manual override enables valve operation without electrically energising
- Dual module system seals all position sensing, communication and control electronics in a compact vibration proof package
- NPT port connections are stainless steel reinforced for long life sealing under high torque stress conditions
- Water proof quick connectors, compression fittings or conduit connections are available for convenient, reliable attachment to plant electrical systems

Telephone: **+44 (0)1772 323529** Email: **sales@dixoneurope.co.uk**

Long Stroke Valves - Technical Information

3
53-06

RIEGER





Applications:

- Used in dairy, beverage and food plants where the product contains particles, has high viscosity or pressure differential is an issue.

Features:

- valve body from solid bar; no dead space; drainable when mounted in various positions
- high-grade inner surfaces; no dome or sump in product space
- change of seals without special tools; optimum cleanability
- modular assembly; system low spare part costs

Technical Data

Material:

- product wetted: 1.4404/AISI316L
- optional: 1.4435/AISI316L
- non product contact: 1.4301/AISI304

Product contact seals:

- O-rings: EPDM (FDA)

Temperatures:

- maximum standard operating temperature: 130°C (266°F)
- sterilisation temperature: 150°C (300°F) short time* (approx. 20 min)

Standard operating pressure:

- standard pressure: max. 6 bar (87 PSI)
- actuator air pressure: min. 6 bar (87 PSI) - max. 10 bar (145 PSI)

Surfaces:

- product wetted surfaces: Ra<= 0.8 µm(32) mechanically polished optional surfaces available
- non product contact: Ra<=1.6 µm

Standard connections:

- O.D.-Tube (DIN 11866 C) Weld Optional connections on request

*dependent upon operating conditions

Ordering Information

Valve Series (1-2)	Type (3)	Body Config. (4)	Ports (5)	Size (6-7)	Actuator (8)	Seat Material (9)	Control Top (10)	Switches (11)	Solenoid (12) *	Communication (13)	Conduit Connectors (14)	Options (15)
SV Seat Valve	**J** Long Stroke Shut Off	**A** T	**C** Clamp	**10** 1"	**A** Manual	**E** EPDM	**N** None	**N** None	**N** None	**N** None	**N** None	**N** None
	K Long Stroke Divert	**B** L	**B** Buttweld Other:____	**15** 1.5"	**B** Spring Return (Air To Raise)	**V** FKM	**C** Communication Module	**S** Solid State	**3** 3-Way Piezo	**A** Device Net	**1** (1) M12 Poly Cable Gland	
		E F	**Z** Combination (Add Note) _____ Specify Ports	**20** 2"	**C** Spring Return (Air To Lower)			**R** Namur	**4** 3-Way Poppet Style 24V DC 1.8W	**B** Foundation Fieldbus	**2** (2) ½" NPT	
		F LL		**25** 2.5"	**D** Double Acting				**5** 3-Way Poppet Style 120V AC 7.2W	**C** Foundation Field-bus (Externally Powered)	**3** (2) M20	
		G TL		**30** 3"					**6** 3-Way Poppet Style 24V DC 0.5W	**D** Modbus	**4** (2) Cable Glands	
		H LT		**40** 4"					**7** 3-Way Intrinsi-cally Safe 12V DC	**E** As-Interface	**5** (1) 5 Pin Connector	
		I TT								**F** As-Interface (W/ Extended Addressing)	**6** (1) 4 Pin Connector	
		J 3 Port									**7** (2) 4 Pin Connectors	
		K 4 Port										
		L Tank 30°										
		M Tank 90°										
		N Angle										

L

Long Stroke Angle Valve L-Type

Pneumatic - Air to Open/Spring to Close NC

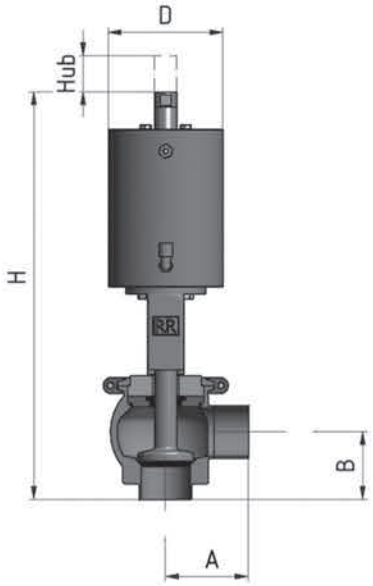

SIZE	NOMINAL WALL	A	B	D	H	STROKE	LBS.
1"	1 x 0.065	1.97	1.97	3.54	11.97	0.71	11.9
1½"	1.5 x 0.065	3.15	2.16	3.54	13.35	0.98	14.6
2"	2 x 0.065	3.15	2.56	4.37	16.85	1.38	23.8
2½"	2.5 x 0.065	3.94	2.76	5.3	19.53	1.81	34.4
3"	3 x 0.065	4.72	3.15	6.77	23.03	2.28	55.3
4"	4 x 0.083	4.13	3.54	6.77	23.90	2.95	63.9

Long Stroke Double Angle Valve T-Type

Pneumatic - Air to Open/Spring to Close NC

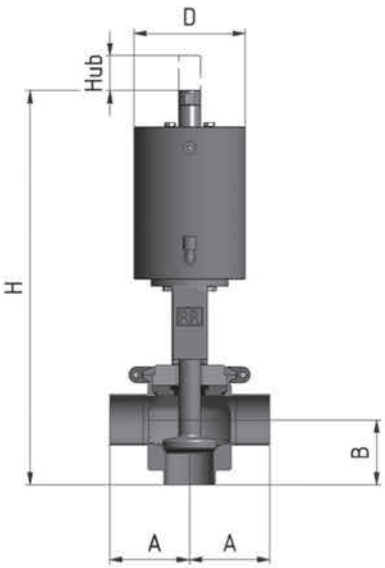

SIZE	NOMINAL WALL	A	B	D	H	STROKE	LBS.
1"	1 x 0.065	1.97	1.97	3.54	11.97	0.71	11.9
1½"	1.5 x 0.065	3.15	2.16	3.54	13.35	0.98	14.6
2"	2 x 0.065	3.15	2.56	4.37	16.85	1.38	23.8
2½"	2.5 x 0.065	3.94	2.76	5.3	19.53	1.81	34.4
3"	3 x 0.065	4.72	3.15	6.77	23.03	2.28	55.3
4"	4 x 0.083	4.13	3.54	6.77	23.90	2.95	63.9

Bill of Materials for L-Body Long Stroke - Valves

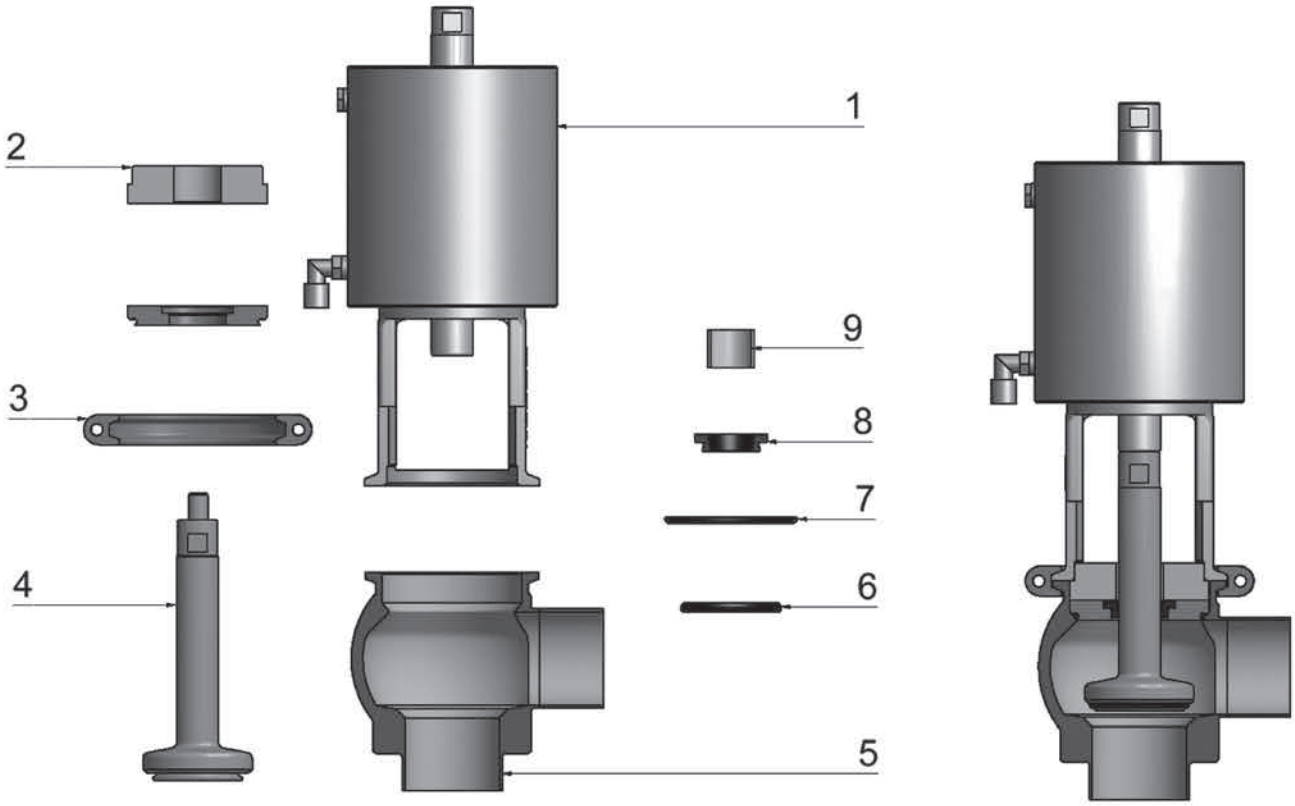

Repair Kit contains:

#6 (1) EPDM O-ring
#7 (1) EPDM O-ring
#8 (1) EPDM gasket
#9 (1) plastic bushing

VALVE SIZE	REPAIR KIT PART #
1"	SV-100-RKLS-E
1½"	SV-150-RKLS-E
2"	SV-200-RKLS-E
2½"	SV-250-RKLS-E
3"	SV-300-RKLS-E
4"	SV-400-RKLS-E

ITEM	DESCRIPTION	QUANTITY
1	actuator	1
2	mounting for spindle seals	1
3	clamp	1
4	spindle	1
5	housing	1
6	EPDM O-ring	1
7	EPDM O-ring	1
8	EPDM gasket	1
9	plastic bushing	1

CV Values

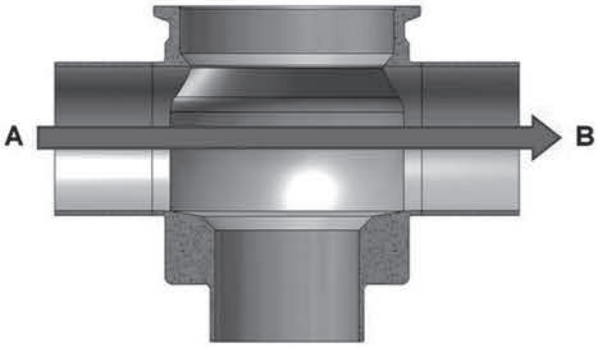

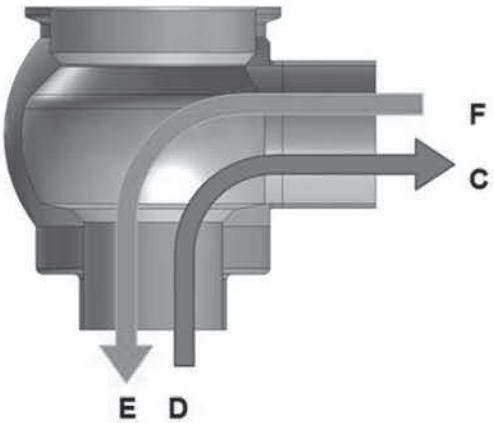

FLOW DIRECTION			
INCH	A-B	C-D	E-F
1"	12.2	11.9	11.6
1½"	30.2	29.7	28.8
2"	56.2	55.3	53.6
2½"	90.3	88.8	86.1
3"	132.4	130.2	126.2
4"	236.2	232.4	225.2

CALCULATION FORMULA FOR Q

$$Q = CV \sqrt{\frac{\Delta P}{S.G.}}$$

Q = flow (m3 /h)
ΔP = Pressure differential (bar)
S.G. = Specific Gravity (1.0 for water)

L

Pressure Loss Diagrams for Hygienic L-Body Valves

Direction A-B

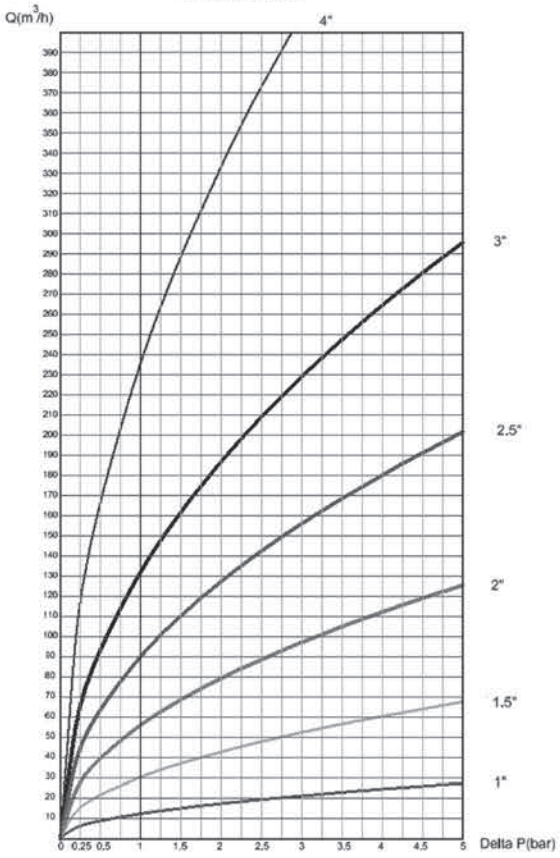

Direction C-D

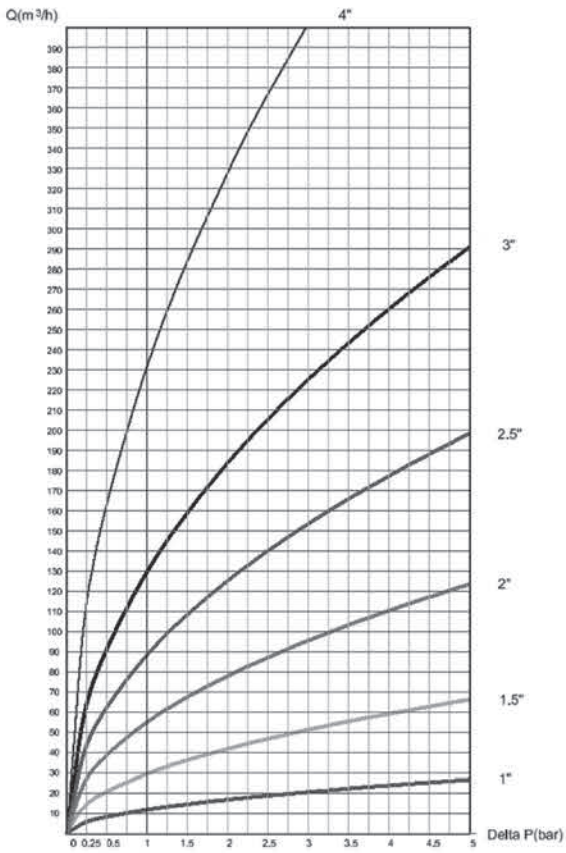

Direction E-F

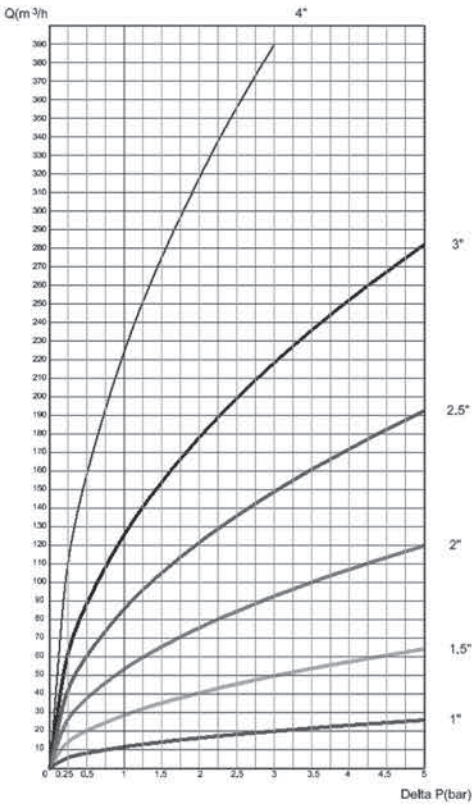

L

Long Stroke Change - Over Valve – 3/2-Ways

Pneumatic - Air to Open/Spring to Close NC – 3/2-Ways - One-Piece Valve Body

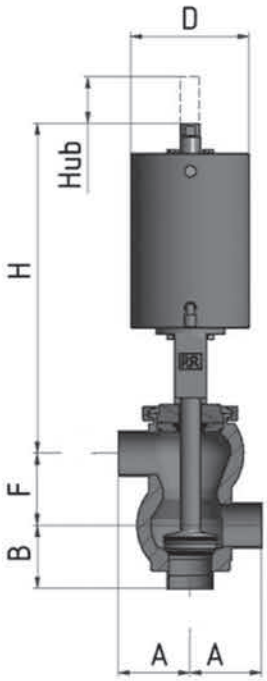

SIZE	NOMINAL WALL	A	B	F	D	H	STROKE (HUB)
1"	1 x 0.065	2.36	1.97	1.97	2.54	11.10	1.22
1½"	1.5 x 0.065	3.15	2.17	2.48	3.54	13.62	1.69
2"	2 x 0.065	3.94	2.56	75.5	4.37	16.97	2.20
2½"	2.5 x 0.065	3.94	2.84	3.39	5.32	18.58	2.36
3"	3 x 0.065	4.92	3.15	3.98	6.77	19.92	2.99
4"	4 x 0.083	5.91	3.74	4.86	6.77	24.09	3.94

NC = if air fails, lower line is closed

Long Stroke Change - Over Valve – 4/2-Ways

Pneumatic - Air to Open/Spring to Close NC – 4/2-Ways - One-Piece Valve Body

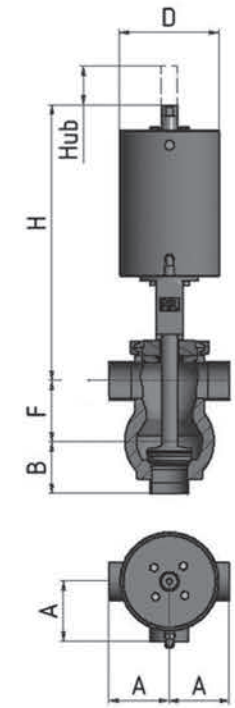

SIZE	NOMINAL WALL	A	B	F	D	H	STROKE (HUB)
1"	1 x 0.065	2.36	1.97	1.97	2.54	11.10	1.22
1½"	1.5 x 0.065	3.15	2.17	2.48	3.54	13.62	1.69
2"	2 x 0.065	3.94	2.56	75.5	4.37	16.97	2.20
2½"	2.5 x 0.065	3.94	2.84	3.39	5.32	18.58	2.36
3"	3 x 0.065	4.92	3.15	3.98	6.77	19.92	2.99
4"	4 x 0.083	5.91	3.74	4.86	6.77	24.09	3.94

NC = if air fails, lower line is closed

Bill of Materials for Long Stroke Change - Over Valves

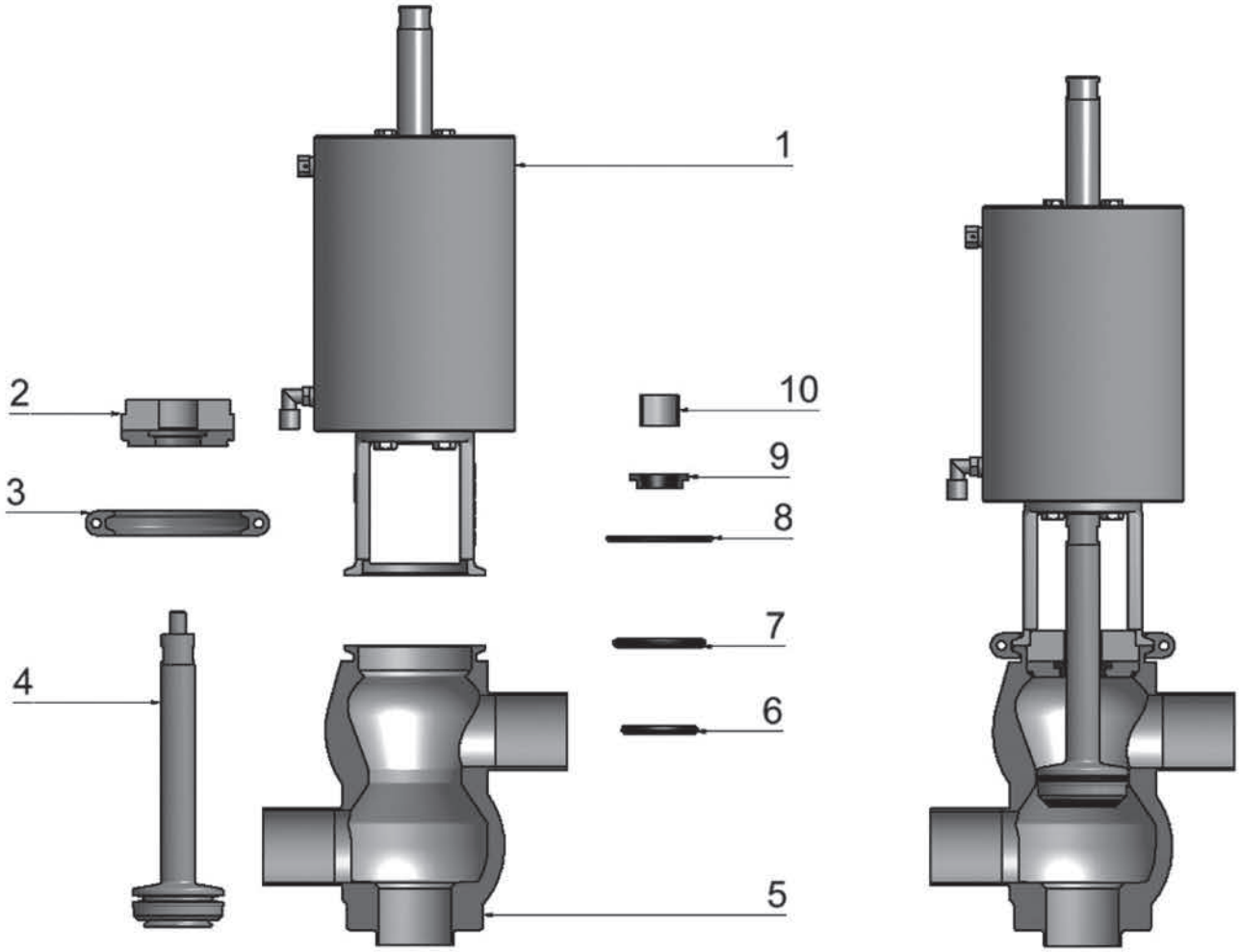

L

Repair Kit contains:

#6 (1) O-ring
#7 (1) O-ring
#8 (1) O-ring
#9 (1) gasket
#10 (1) plastic bushing

VALVE SIZE	REPAIR KIT PART #
1"	SV-100-RKCO-E
1½"	SV-150-RKCO-E
2"	SV-200-RKCO-E
2½"	SV-250-RKCO-E
3"	SV-300-RKCO-E
4"	SV-400-RKCO-E

ITEM	DESCRIPTION	QUANTITY
1	actuator	1
2	Mounting for spindle seals	1
3	clamp	1
4	spindle	1
5	housing	1
6	EPDM O-ring	1
7	EPDM O-ring	1
8	EPDM O-ring	1
9	EPDM gasket	1
10	plastic bushing	1

CV Values for Change - Over Valves

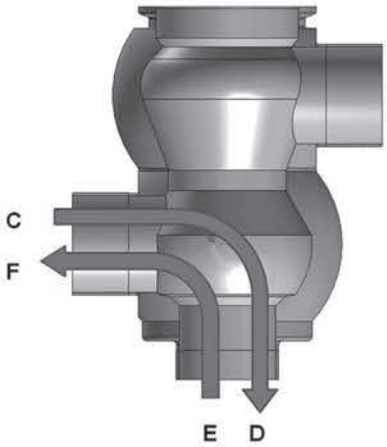

FLOW DIRECTION		
SIZE	C-D	E-F
1"	11.9	11.6
1½"	29.7	28.7
2"	55.3	53.6
2½"	88.8	86.1
3"	130.2	126.2
4"	232.4	225.2

Flow Direction C-D = product pressure 6 bar maximum

Flow Direction E-F = product pressure upon request

Pressure Loss Diagrams for Change - Over Valves

Directions C-D

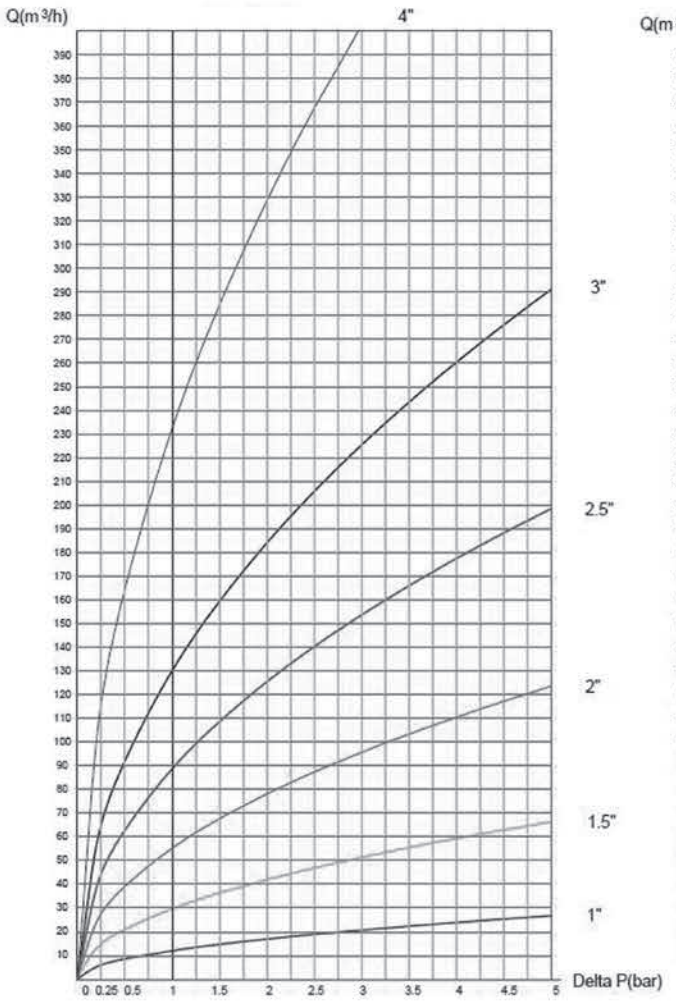

Directions E-F

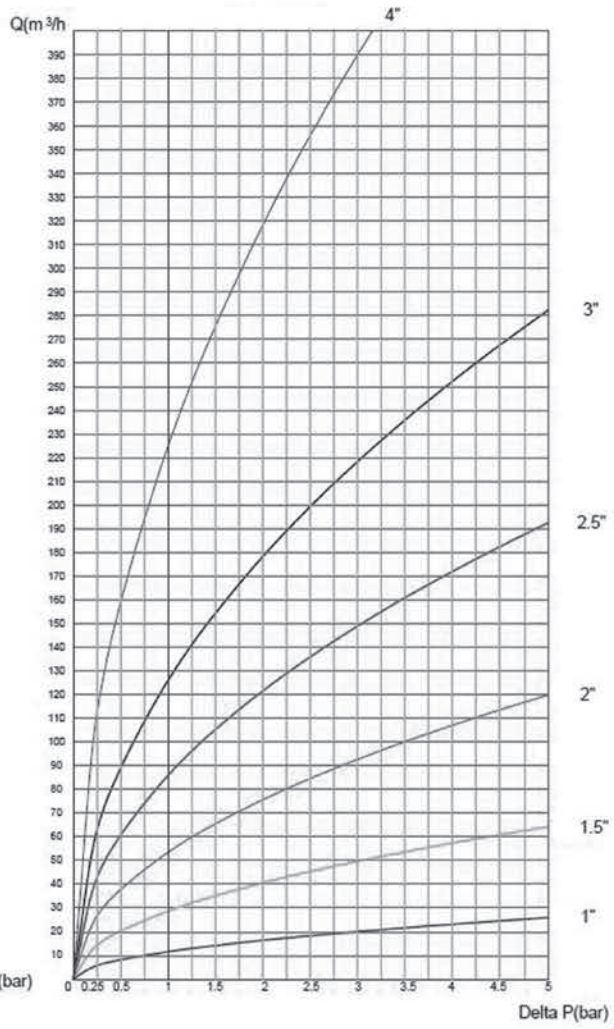

L

CV Values for Change - Over Valves

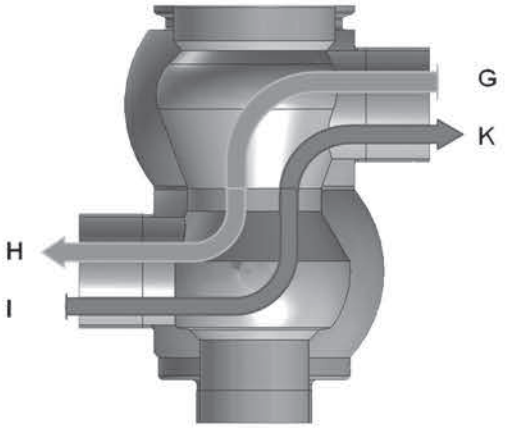

FLOW DIRECTION		
SIZE	G-H	I-K
1"	12.3	12.2
1½"	30.5	30.3
2"	56.9	56.4
2½"	91.4	90.7
3"	134.0	133.0
4"	239.0	237.2

Flow Direction I-K = product pressure 6 bar maximum

Flow Direction G-H = product pressure upon request

Pressure Loss Diagrams for Change - Over Valves

Directions G-H

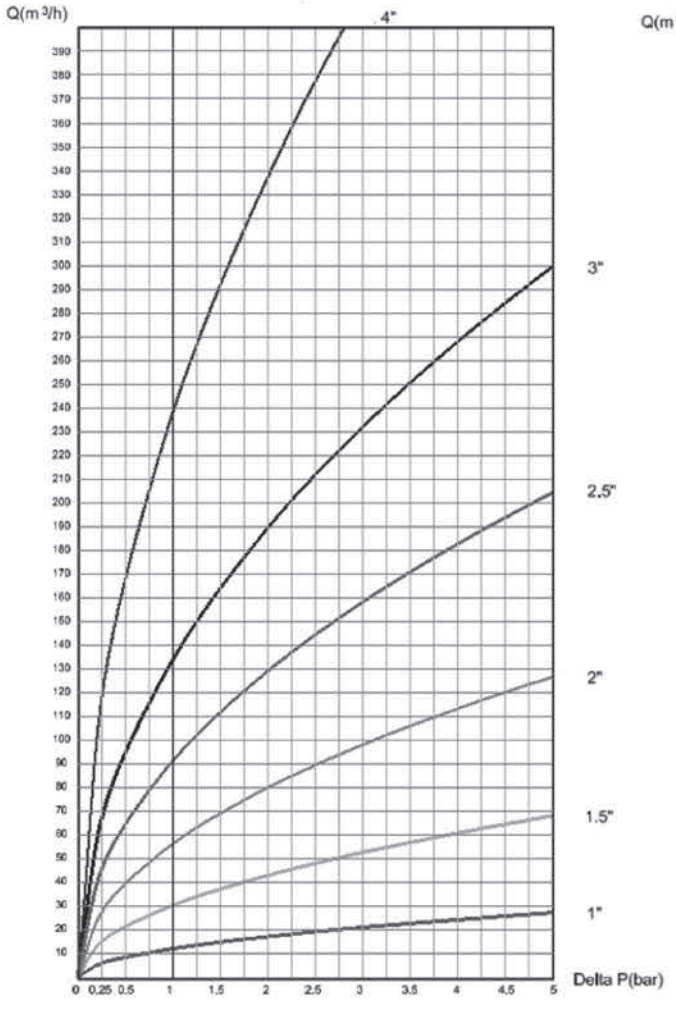

Directions I-K

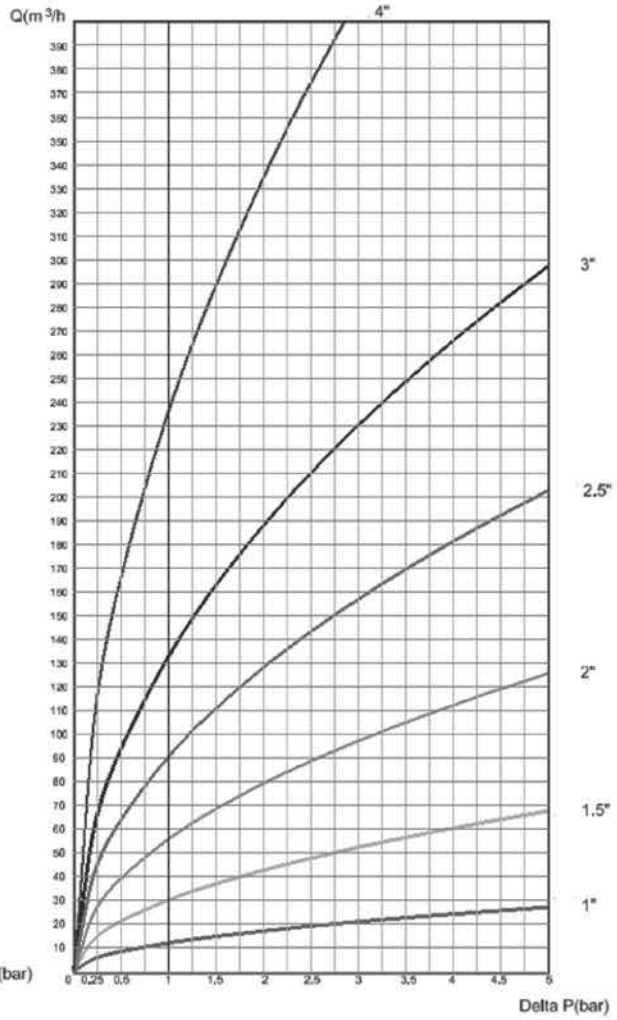

L

Telephone: **+44 (0)1772 323529**

Email: **sales@dixoneurope.co.uk**

Aseptic Type Valves - Technical Information

RIEGER

53-06

Applications:

- For sterile process engineering the valve body is hermetically sealed against the environment and provides security for your products.

Features:

- solid housing
- no dead spaces
- completely draining
- many built-in positions possible
- complete separation from environment
- no dome or sump in product space
- change of seals without special tools less standing times optimum cleanability
- long life PTFE bellows
- low spare parts costs



Technical Data

Material:

- product wetted: 1.4404/AISI316L
- optional: 1.4435/AISI316L
- non product contact: 1.4301/AISI304

Product contact seals:

- bellows: PTFE

Temperatures:

- maximum standard operating temperature: 121 °C (250 °F)
- sterilisation temperature: 135 °C (275 °F) short time* (approx. 20 min)

Operating pressure:

- closure pressure: max. 6 bar (87 PSI)
- actuator air pressure: min. 6 bar (87 PSI) - max. 10 bar (145 PSI)

Surfaces:

- In product contact: Ra<= 0.8 µm electro polished, other surfaces upon request
- not in contact with product: Ra<=1.6 µm

Connections:

- O.D.-Tube (DIN 11866 C)

*dependent upon operating conditions

L

Ordering Information

Valve Series (1-2)	Type (3)	Body Config. (4)	Ports (5)	Size (6-7)	Actuator (8)	Seat Material (9)	Control Top (10)	Switches (11)	Solenoid (12) *	Communication (13)	Conduit Connectors (14)	Options (15)
SV Seat Valve	**A** Aseptic Shut Off	**A** T	**C** Clamp	½" see section G/Bio check	**A** Manual	**E** PTFE/ EPDM	**N** None	**N** None	**N** None	**N** None	**N** None	**N** None
	E Aseptic Divert	**B** L	**B** Weld	**10** 1"	**B** Spring Return (Air To Raise)	**V** PTFE/ FKM	**C** Communication Module	**S** Solid State	**3** 3-Way Piezo	**A** Device Net	**1** (1) M12 Poly Cable Gland	
	I Aseptic Tank Bottom	**E** F	**Z** Combination Note: Specify Ports	**15** 1.5"	**C** Spring Return (Air To Lower)		**B** Burkert Top	**R** Namur	**4** 3-Way Poppet Style 24V DC 1.8W	**B** Foundation Fieldbus	**2** (2) ½" NPT	
	O Aseptic Angle	**F** LL	Other:____	**20** 2"	**D** Double Acting				**5** 3-Way Poppet Style 120V AC 7.2W	**C** Foundation Fieldbus (Externally Powered)	**3** (2) M20	
		G TL		**25** 2.5"					**6** 3-Way Poppet Style 24V DC 0.5W	**D** Modbus	**4** (2) Cable Glands	
		H LT		**30** 3"					**7** 3-Way Intrinsically Safe 12V DC	**E** As-Interface	**5** (1) 5 Pin Connector	
		I TT		**40** 4"						**F** As-Interface (W/ Extended Addressing)	**6** (1) 4 Pin Connector	
		J 3 Port		**C** Combination Divert, specify sizes							**7** (2) 4 Pin Connectors	
		K 4 Port										
		L Tank 30°										
		M Tank 90°										
		N Angle										

L

Aseptic L - Body Valve

Manual with Crank Handle

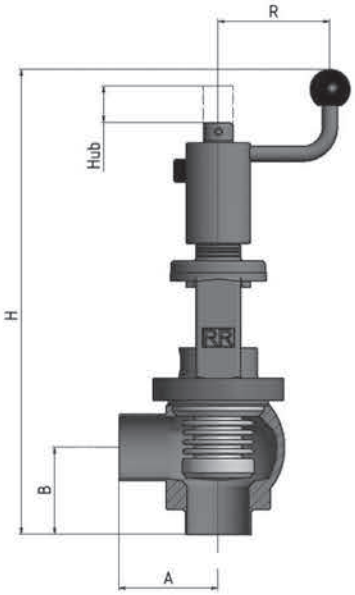

SIZE	NOMINAL WALL	A	B	R	H	STROKE	LBS.
1"	1 x 0.065	1.97	1.97	2.87	11.81	0.28	6.8
1½"	1.5 x 0.065	3.15	2.17	2.87	11.81	0.35	11.7
2"	2 x 0.065	3.15	2.56	3.54	14.96	0.47	12.6
2½"	2.5 x 0.065	3.94	2.76	3.54	15.55	0.59	16.8
3"	3 x 0.065	4.72	3.15	3.54	17.13	0.71	22.7
4"	4 x 0.083	5.91	3.54	3.54	17.52	0.91	31.5

Aseptic T - Body Valve

Manual with Crank Handle

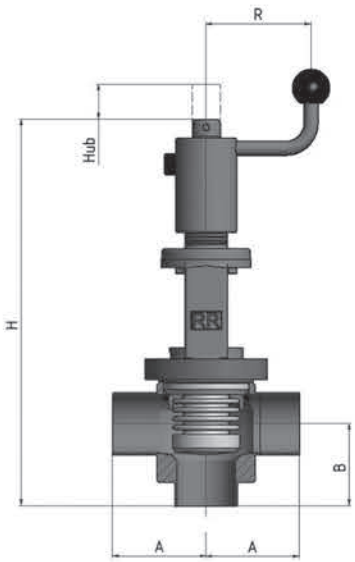

SIZE	NOMINAL WALL	A	B	R	H	STROKE	LBS.
1"	1 x 0.065	1.97	1.97	2.87	11.81	0.28	6.8
1½"	1.5 x 0.065	3.15	2.17	2.87	11.81	0.35	11.7
2"	2 x 0.065	3.15	2.56	3.54	14.96	0.47	12.6
2½"	2.5 x 0.065	3.94	2.76	3.54	15.55	0.59	16.8
3"	3 x 0.065	4.72	3.15	3.54	17.13	0.71	22.7
4"	4 x 0.083	5.91	3.54	3.54	17.52	0.91	31.5

Bill of Materials for Aseptic L-Body Valves

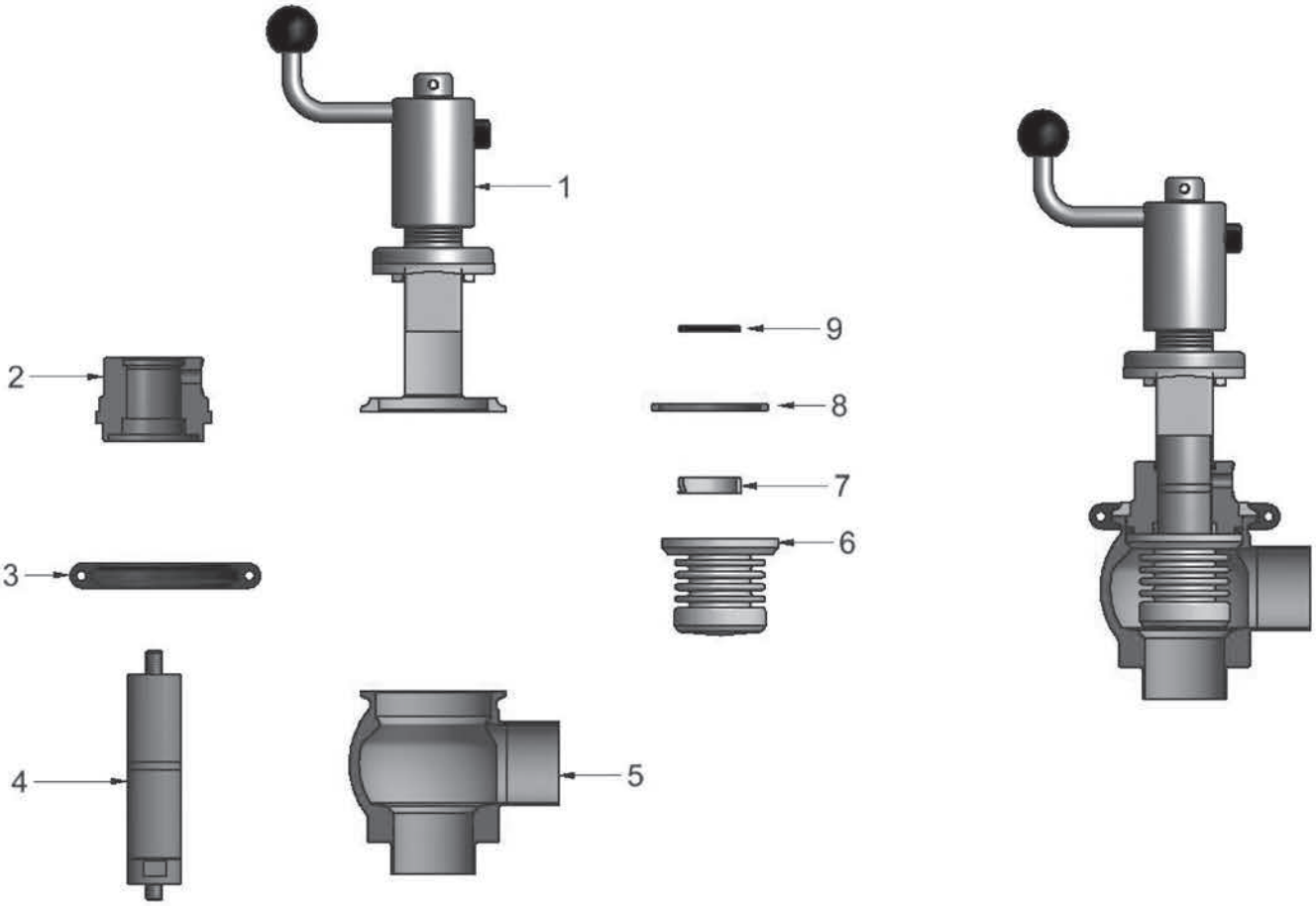

L

Repair Kit contains:

#6 (1) PTFE-bellows
#7 (1) guide
#8 (1) O-ring for bellows
#9 (1) O-ring for spindle

VALVE SIZE	REPAIR KIT PART #
1"	SVAL-100-RK
1½"	SVAL-150-RK
2"	SVAL-200-RK
2½"	SVAL-250-RK
3"	SVAL-300-RK
4"	SVAL-400-RK

ITEM	DESCRIPTION	QUANTITY
1	crank handle	1
2	Mounting for spindle seals	1
3	clamp	1
4	spindle	1
5	housing	1
6	PTFE-bellows	1
7	guide	1
8	O-ring for bellows	1
9	O-ring for spindle	1

Aseptic L - Body Valve

Pneumatic - Spring Closing / Air Opening NC

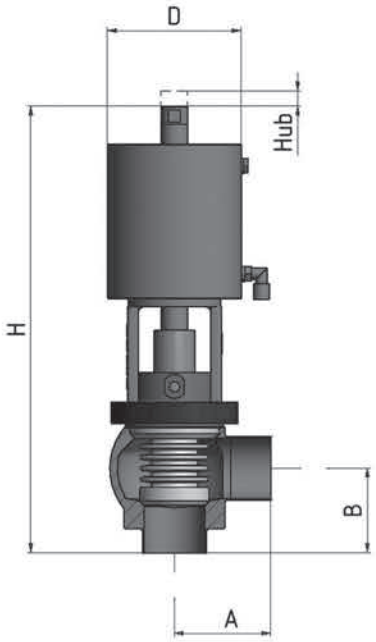

SIZE	NOMINAL WALL	A	B	R	H	STROKE	LBS.
1"	1 x 0.065	1.97	1.97	3.54	12.01	0.28	11.2
1½"	1.5 x 0.065	3.15	2.17	3.54	12.40	0.35	13.7
2"	2 x 0.065	3.15	2.56	4.33	14.96	0.47	22.9
2½"	2.5 x 0.065	3.94	2.76	5.24	16.93	0.59	33.5
3"	3 x 0.065	4.72	3.15	6.77	19.88	0.71	54.5
4"	4 x 0.083	5.91	3.54	6.77	20.67	0.91	63.1

Aseptic T - Body Valve

Pneumatic - Spring Closing / Air Opening NC

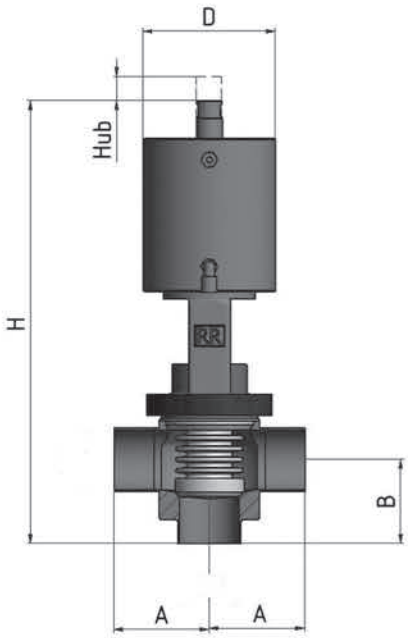

SIZE	NOMINAL WALL	A	B	R	H	STROKE	LBS.
1"	1 x 0.065	1.97	1.97	3.54	12.01	0.28	11.2
1½"	1.5 x 0.065	3.15	2.17	3.54	12.40	0.35	13.7
2"	2 x 0.065	3.15	2.56	4.33	14.96	0.47	22.9
2½"	2.5 x 0.065	3.94	2.76	5.24	16.93	0.59	33.5
3"	3 x 0.065	4.72	3.15	6.77	19.88	0.71	54.5
4"	4 x 0.083	5.91	3.54	6.77	20.67	0.91	63.1

Bill of Materials for Aseptic L-Body Valves

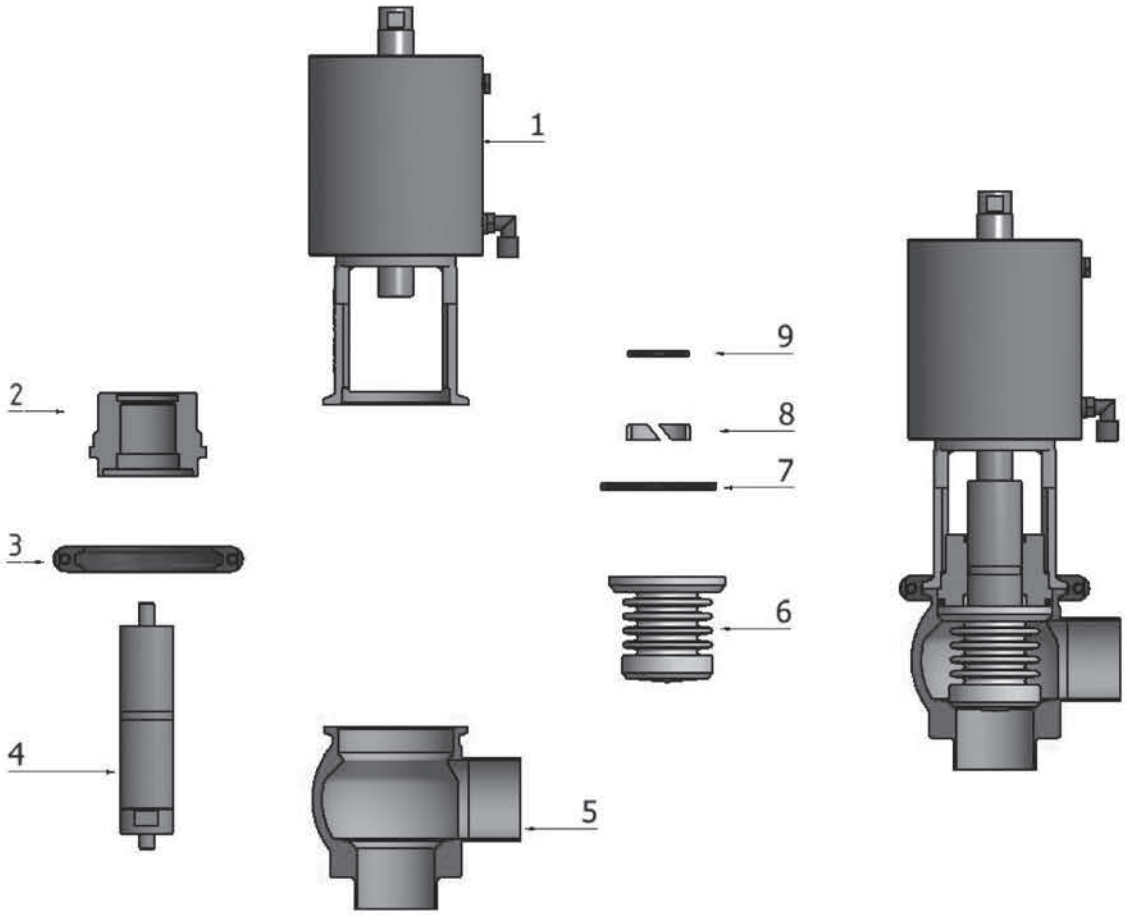

L

Repair Kit contains:

#6 (1) PTFE-bellows
#7 (1) O-ring for bellows
#8 (1) guide
#9 (1) O-ring for spindle

VALVE SIZE	REPAIR KIT PART #
1"	SVAL-100-RK
1½"	SVAL-150-RK
2"	SVAL-200-RK
2½"	SVAL-250-RK
3"	SVAL-300-RK
4"	SVAL-400-RK

ITEM	DESCRIPTION	QUANTITY
1	actuator	1
2	mounting for spindle seals	1
3	clamp	1
4	spindle	1
5	housing	1
6	PTFE-bellows	1
7	O-ring for bellows	1
8	guide	1
9	O-ring for bellows	1

Manual with Crank Handle

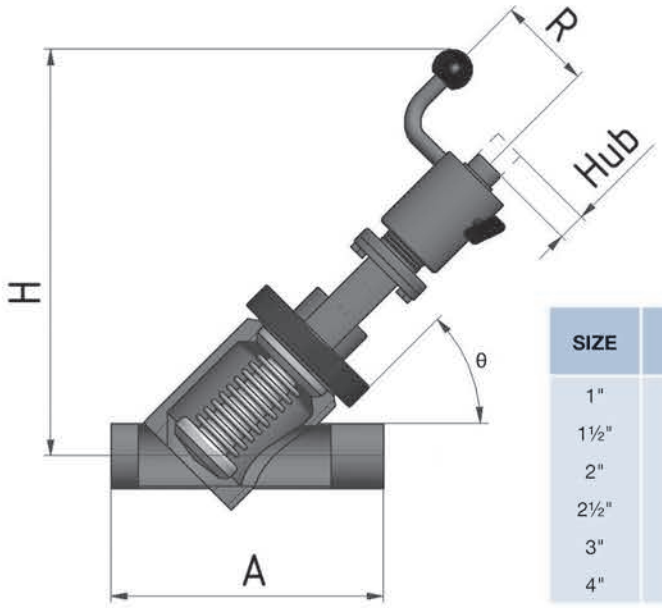

SIZE	NOMINAL WALL	A	Θ	R	H	STROKE	LBS.
1"	1 x 0.065	5.51	45°	2.87	10.83	0.55	11.0
1½"	1.5 x 0.065	6.69	45°	2.87	11.02	0.55	12.1
2"	2 x 0.065	8.07	45°	3.54	13.98	0.79	23.2
2½"	2.5 x 0.065	9.84	40°	3.54	13.78	0.87	30.9
3"	3 x 0.065	11.81	40°	3.54	14.37	1.18	50.7
4"	4 x 0.083	13.78	40°	3.54	15.35	1.26	57.3

Bill of Materials for Aseptic Y - Body Valves

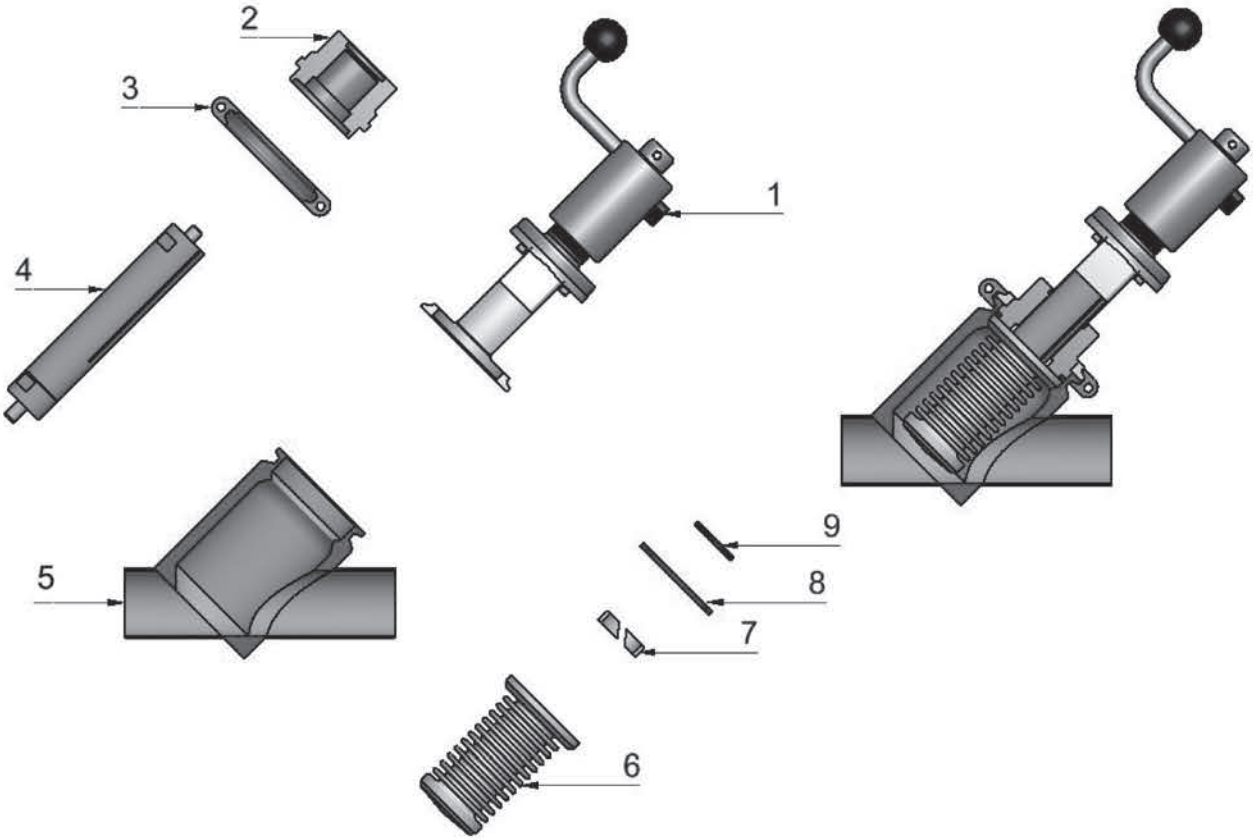

Repair Kit contains:

#6 (1) PTFE-bellows
#7 (1) guide
#8 (1) O-ring for bellows
#9 (1) O-ring for spindle

VALVE SIZE	REPAIR KIT PART #
1"	SVAY-100-RK
1½"	SVAY-150-RK
2"	SVAY-200-RK
2½"	SVAY-250-RK
3"	SVAY-300-RK
4"	SVAY-400-RK

ITEM	DESCRIPTION	QUANTITY
1	crank handle	1
2	mounting for spindle seals	1
3	clamp	1
4	spindle	1
5	housing	1
6	PTFE-bellows	1
7	guide	1
8	O-ring for bellows	1
9	O-ring for spindle	1

Aseptic Y - Body Angle Valve

Pneumatic - Spring Opening / Air Closing NC

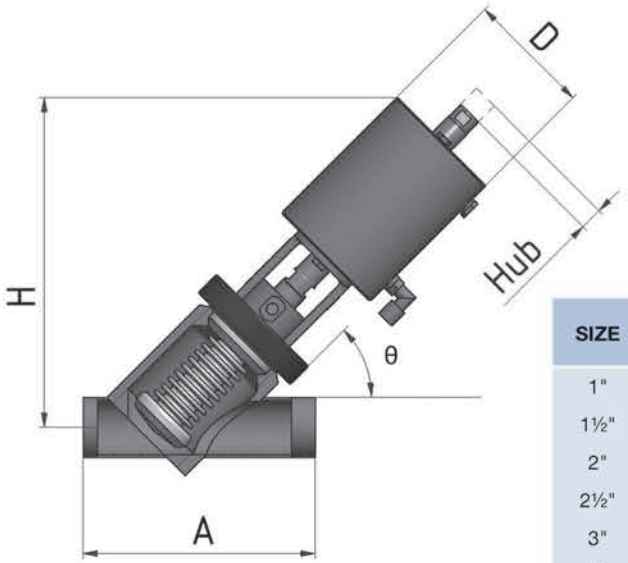

SIZE	NOMINAL WALL	A	ϴ	D	H	STROKE	LBS.
1"	1 x 0.065	5.51	45°	3.54	9.25	0.55	11.9
1½"	1.5 x 0.065	6.69	45°	3.54	9.45	0.55	13.7
2"	2 x 0.065	8.07	45°	4.33	11.57	0.79	24.3
2½"	2.5 x 0.065	9.84	40°	5.24	12.80	0.87	33.1
3"	3 x 0.065	11.81	40°	6.30	15.12	1.18	54.0
4"	4 x 0.083	13.78	40°	6.61	15.43	1.26	61.7

Bill of Materials for Aseptic Y - Body Valves

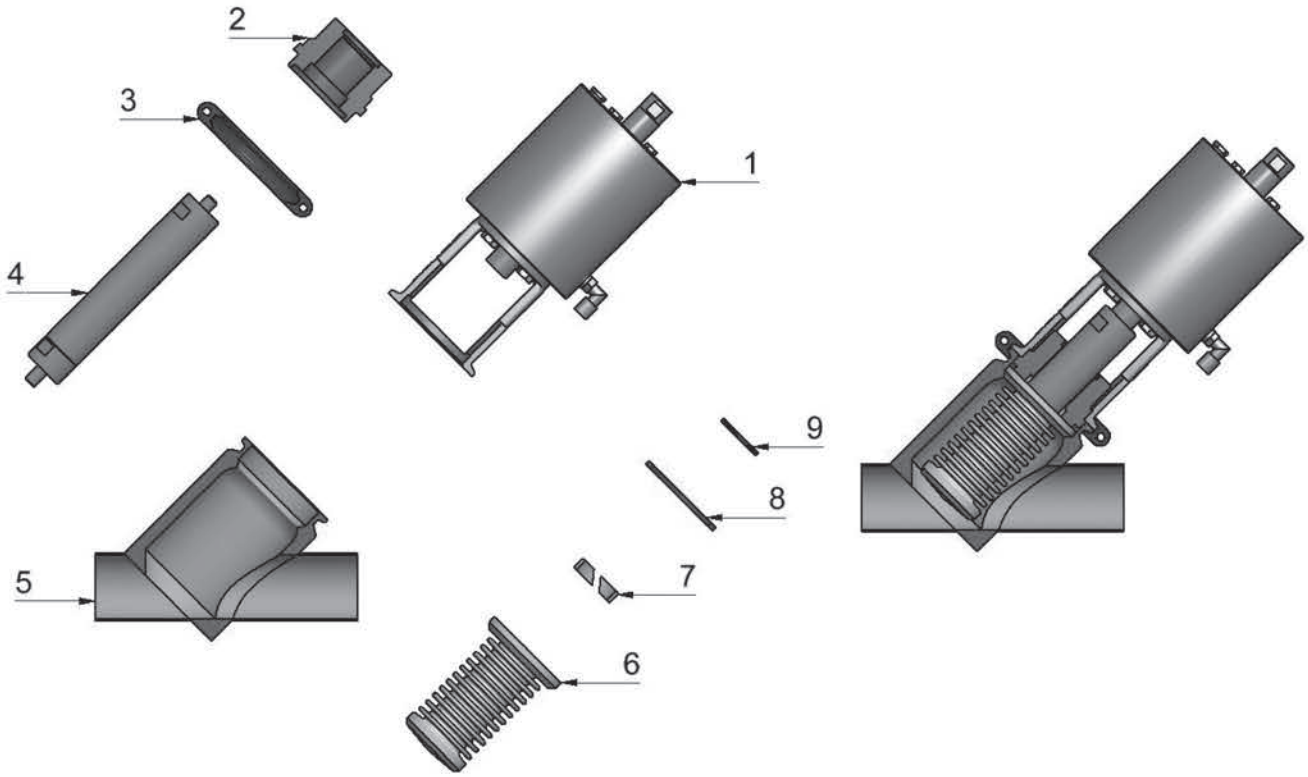

Repair Kit contains:

#6 (1) PTFE-bellows
#7 (1) guide
#8 (1) O-ring for bellows
#9 (1) O-ring for spindle

VALVE SIZE	REPAIR KIT PART #
1"	SVAY-100-RK
1½"	SVAY-150-RK
2"	SVAY-200-RK
2½"	SVAY-250-RK
3"	SVAY-300-RK
4"	SVAY-400-RK

ITEM	DESCRIPTION	QUANTITY
1	actuator	1
2	Mounting for spindle seals	1
3	clamp	1
4	spindle	1
5	housing	1
6	PTFE-bellows	1
7	guide	1
8	O-ring for bellows	1
9	O-ring for spindle	1

Mix Proof Valves - Technical Information

RIEGER

53-06



Applications:

- In food and beverage industries when the need to separate non-compatible liquids is required.

Features:

- vacuum safe
- balanced valve disks
- radial sealing of both valve seats
- no impact between valve disk and body
- no need of impact buffering cylinder
- no soiling behind the O-rings
- waterhammer safe up to 30 bar (435 PSI)
- change of seals without special tools
- service without danger (spring in cage)
- service possible without compressed air
- lower requirement for controlled air pressure
- valve insert completely removable
- easy cleaning by lifting of both disks
- standard O-rings
- standard-actuator with lift function
- only 4 seals
- KV-value cleaning 1,4 m³/h
- low pressure loss: 0,8 PSI

Technical Data

Material:

- product wetted: 1.4404/AISI316L
- non product contact: 1.4301/AISI304L

Product contact seals:

- EPDM – others upon request

Temperatures:

- maximum standard operating temperature: 130 °C (266 °F)
- sterilisation temperature: 150 °C (300 °F) short time* (approx. 20 min)

Operating pressure:

- closure: max. 10 bar (145 PSI)
- actuator air pressure: min. 6 bar (87 PSI) - max. 10 bar (145 PSI)

Surfaces:

- wetted product surfaces: Ra<= 0.8 µm (32) other surfaces available
- non product contact: Ra<=1.6 µm

*dependent upon operating conditions

CONTACT DIXON ENGINEERING DEPARTMENT FOR ALL INQUIRIES.

Mix Proof Valve

3
85-02

Pneumatic - Air to Open / Spring to Close NC

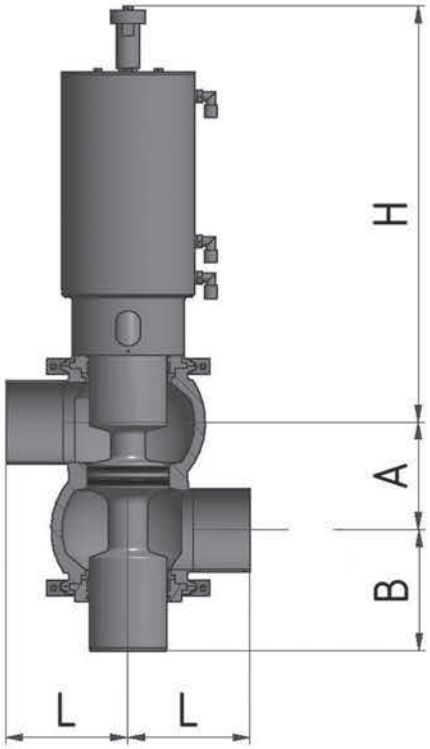

Valve Body Combinations

1(A-E)	2(A-B-C)	3(A-C-D)	4(A-B-C-D)	5(A-C)
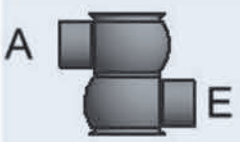	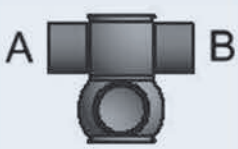		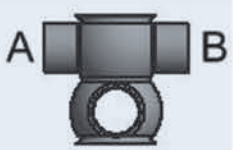	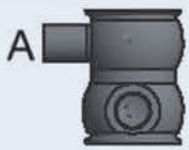
	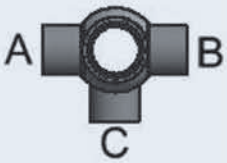	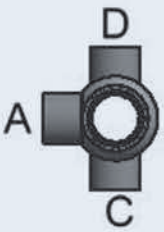	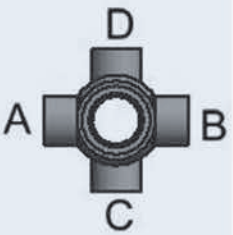	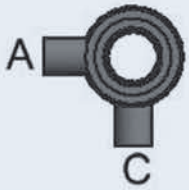

SIZE	NOMINAL WALL	A	B	L	H	KG	LBS.
1"	1 x 0.065	3.11	2.87	2.76	13.78	12	26.5
1½"	1.5 x 0.065	3.13	3.11	3.94	14.76	16	35.3
2"	2 x 0.065w	3.21	3.78	3.94	15.75	18	39.7
2½"	2.5 x 0.065	3.94	3.94	3.94	16.14	19	41.9
3"	3 x 0.065	6.65	5.12	4.92	16.54	29	63.9
4"	4 x 0.083	5.08	5.43	5.91	16.73	33	72.8
6"	Upon request						

Telephone: **+44 (0)1772 323529** Email: **sales@dixoneurope.co.uk**

Pneumatic - Air to Open / Spring to Close NC
Large Upper Body - Small Lower Body

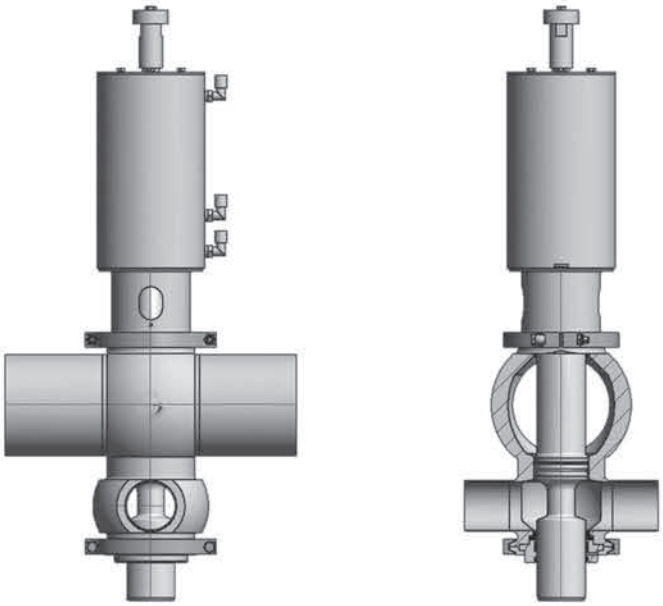

Pneumatic - Air to Open / Spring to Close NC
Large Lower Body - Small Upper Body

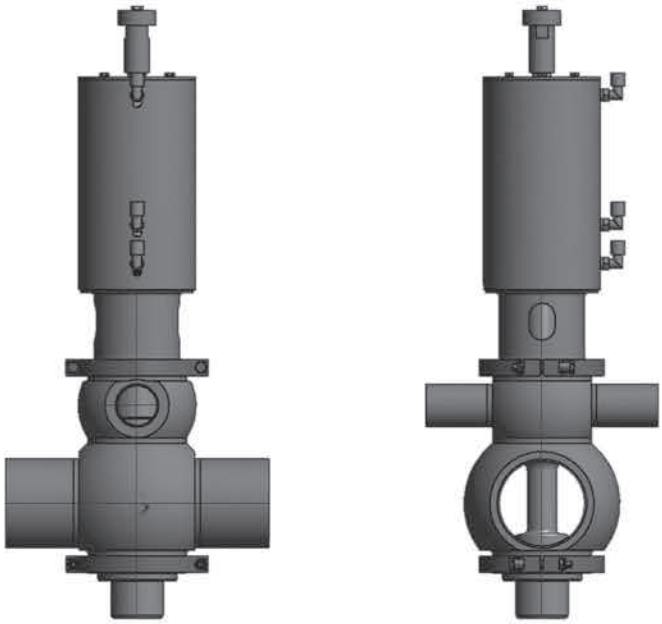







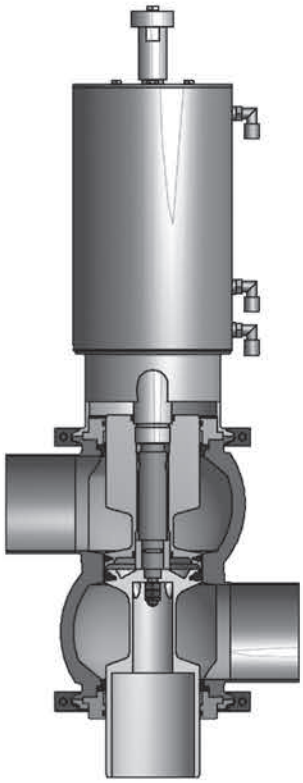

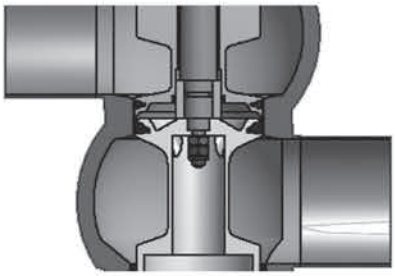

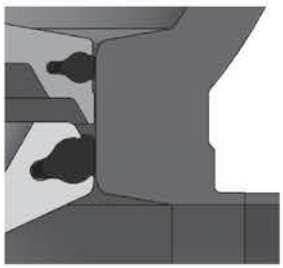

When the valve is closed, the leakage chamber is open.
This ensures that, if one of the two O-rings is defective, the leakage is discharged through the downward opening of the lower valve disc in a depressurized manner. The leakage is thus immediately apparent during the ongoing visual inspection of the plant.

Bill of Materials for Mix Proof Valves

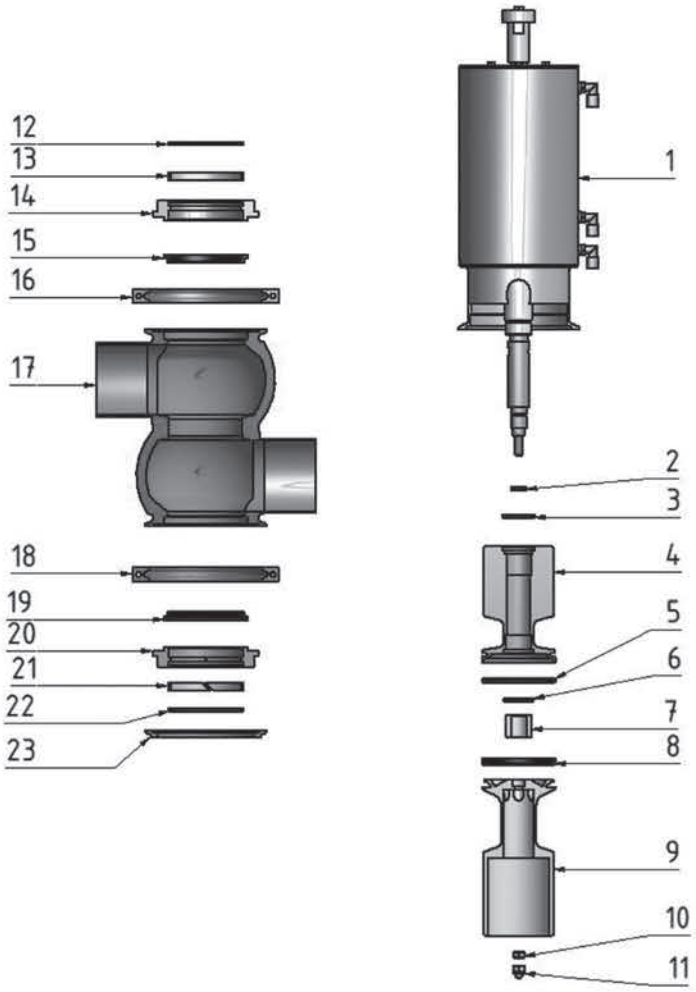

Repair Kit contains:

#2 (1) O-ring
#3 (1) O-ring
#5 (1) O-ring
#6 (1) O-ring
#8 (1) O-ring
#12 (1) O-ring
#13 (1) guide
#15 (1) gasket
#19 (1) gasket
#21 (1) guide
#22 (1) O-ring

VALVE SIZE	REPAIR KIT PART # EPDM	REPAIR KIT PART # VITON®
1"	MP-100-RKE	MP-100-RKV
1½"	MP-150-RKE	MP-150-RKV
2"	MP-200-RKE	MP-200-RKV
2½"	MP-250-RKE	MP-250-RKV
3"	MP-300-RKE	MP-300-RKV
4"	MP-400-RKE	MP-400-RKV

ITEM	DESCRIPTION	QUANTITY
1	actuator	1
2	O-ring	1
3	O-ring	1
4	valve disc upper part	1
5	O-ring	1
6	O-ring	1
7	guide	1
8	O-ring	1
9	valve disc lower part	1
10	safety nut	1
11	cap nut	1
12	o-ring	1
13	guide	1
14	mounting for spindle seals	1
15	gasket	1
16	clamp	1
17	housing	1
18	clamp	1
19	gasket	1
20	mounting for spindle seals	1
21	guide	1
22	O-ring	1
23	cover	1

Mix Proof Piggable Double Seal Valves - Technical Information

RIEGER



Applications:

- Mix Proof Valve designed to be piggable. Used In food and beveage industries when the need to separate non-compatible liquids is required.

Features:

- one-part valve body made of solid bar
- no weld torsion
- in product space only 3 seals
- safe CIP/SIP cleaning
- exchange of gaskets without special tools
- service without danger (spring in cage)
- service possible without compressed air
- low need of control air pressure
- valve insert completely removable upwards
- standard O-rings
- standard actuator with 2 lift functions
- few gaskets
- minimal maintenance costs

Technical Data

Material:

- in product contact: 1.4404/AISI316L
- optional: 1.4435/AISI316L
- non product contact: 1.4301/AISI304

Product contact seals:

- EPDM and PEEK – other materials upon request

Temperatures:

- maximum standard operating temperature: 130 °C (265 °F)
- sterilisation temperature: 150 °C (300 °F) short time* (approx. 20 min)

Operating pressure:

- closing pressure: max. 9 bar
- compressed air pressure: min. 6 bar - max. 10 bar
- water-hammer safe: up to 30 bar

Surfaces:

- product contact optional: Ra<= 0.8 µm electro polished, other surfaces on request
- non product contact: Ra<=1.6 µm

*dependent upon operating conditions

Telephone: **+44 (0)1772 323529** Email: **sales@dixoneurope.co.uk**

Hygienic Double Seal Valve Liftable - Piggable

Pneumatic - Air to Open / Spring to Close

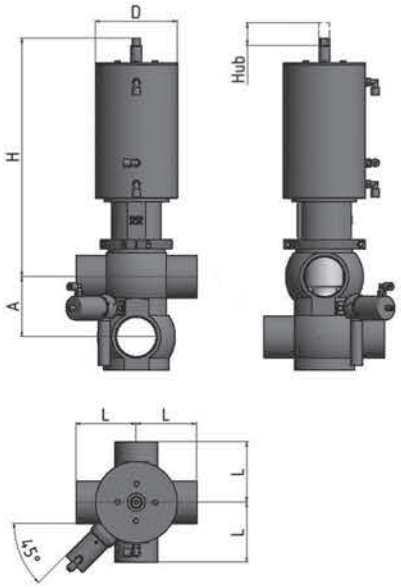

SIZE	NOMINAL WALL	A	L	H	D	STROKE	MAX. BAR
1"	25.4 x 1.65						
1½"	38.1 x 1.65	69	100	352	110	42.0	13.0
2"	50.8 x 1.65	85	100	357	110	42.0	8.5
2½"	63.5 x 1.65	93	100	394	136	44.5	9.0
3"	76.2 x 1.65	107	125	436	174	46.0	10.0
4"	101.6 x 2.11	132	150	450	174	46.0	7.0

Mix Proof Piggable Double Seal Valves - Technical Information

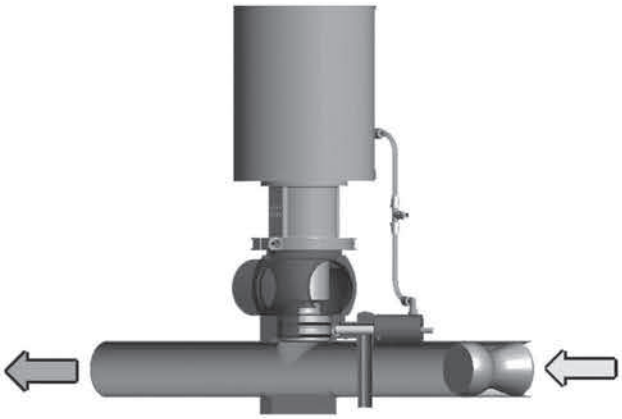

Features:

- maximal product efficiency
- lower waste water costs and environmental burden
- reduced cleaning periods and costs
- minimisation of cleaning water consumption
- minimisation of cleaning agent consumption

Switching Between Main and CIP Valve

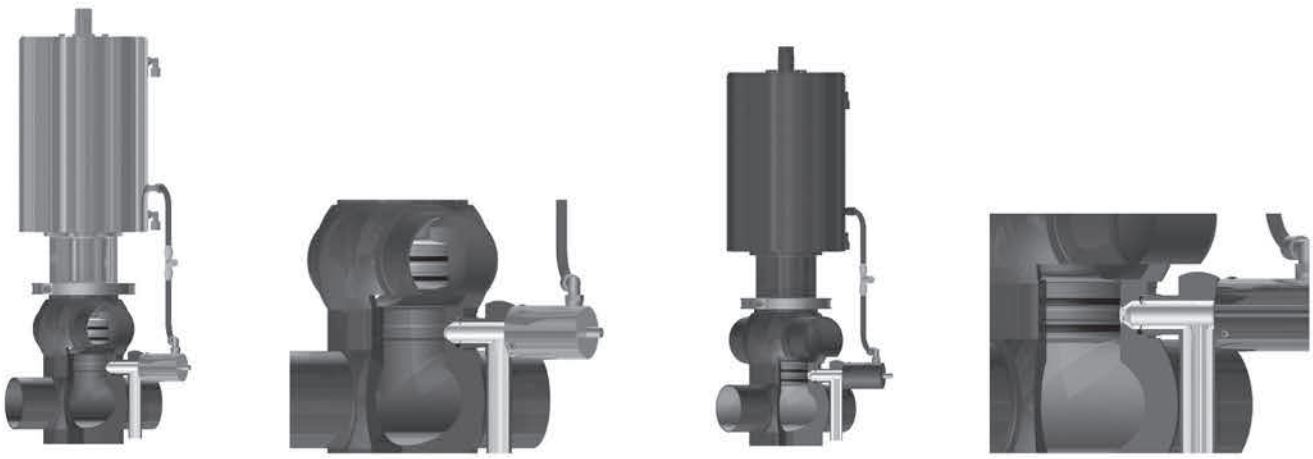

Bill of Materials for Hygienic Double Seal Valves - Piggable

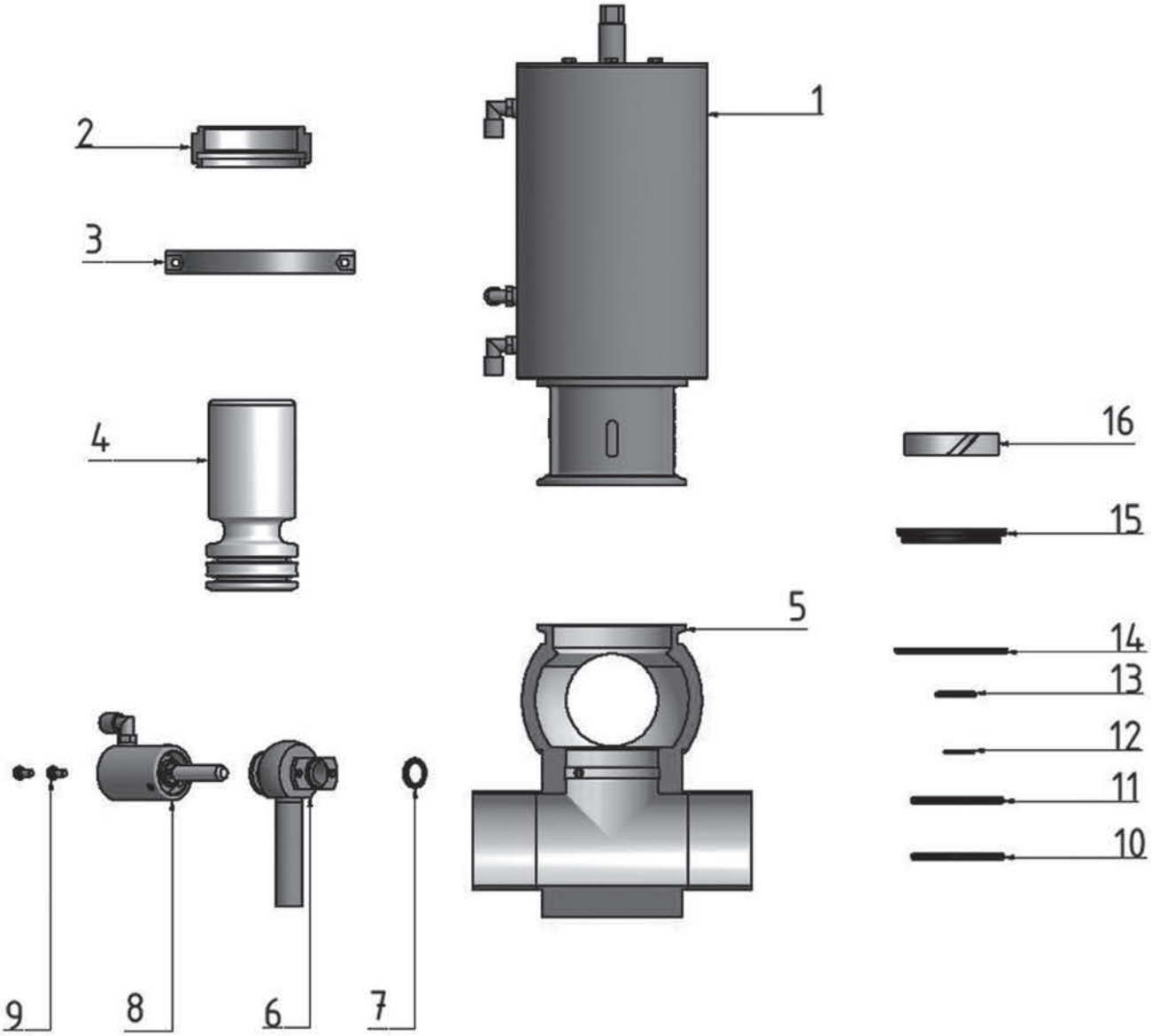

Repair Kit contains:

#10 (1) O-ring
#11 (1) O-ring
#12 (1) nord lock screw
#13 (1) O-ring
#14 (1) O-ring
#15 (1) gasket
#16 (1) plastic bushing

VALVE SIZE	REPAIR KIT PART #
1"	MPP-100-RKE
1½"	MPP-150-RKE
2"	MPP-200-RKE
2½"	MPP-250-RKE
3"	MPP-300-RKE
4"	MPP-400-RKE

ITEM	DESCRIPTION	QUANTITY
1	actuator	1
2	mounting for spindle seals	1
3	clamp	1
4	spindle	1
5	housing	1
6	housing CIP valve	1
7	O-ring housing CIP valve	1
8	actuator CIP valve	1
9	hexagonal screw	2
10	O-ring	1
11	O-ring	1
12	nord lock screw	1
13	O-ring	1
14	O-ring	1
15	gasket	1
16	plastic bushing	1

BC-Series Sanitary Centrifugal Pumps

- Pump and all spare parts are completely interchangeable with all Sanitary C-Series pumps
- Pump model and component part numbers are familiar and easy to use - BC114, BC216, etc.
- Most complete pumps ship in 1 week
- Stocked repair kits: #1, #3, DG and #4 (all-in-one)

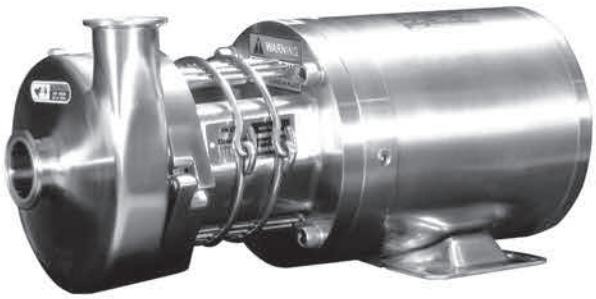

Mechanical Specifications

Model	Inlet	Outlet	Maximum Impeller
BC114	1½" or 2"	1½"	4"
BC216	2" or 2½"	1½"	6"
BC218	2" or 3"	1½"	8"
BC328	3" or 4"	2"	8"

Standard Construction

- Volute: 316L stainless steel
- Impeller: CF8M (316) stainless steel
- Backplate: 316L stainless steel
- Stub Shaft: 316L stainless steel
- Adapter: 304 stainless steel
- Optional Leg Kit: 304 stainless steel
- Seal Types: externally balanced 'D' & 'DG' with clamped in seat
- Rotary Seal Material: carbon
- DG Seal Seat Material: silicone carbide, ceramic and tungsten carbide
- Elastomers: EPDM, silicone and Viton®
- Finish: Hygienic polish 32RA

Performance Characteristics

- Nominal Capacity: up to 780 GPM
- Temperature: 0°C - 100°C, consult factory for other temperatures
- Nominal speed: up to 3500 RPM - 60 Hz

Motors and Mounting

- Motor: standard C-face, 1750 & 3450 RPM, TEFC and washdown, foot mounted
- Additional motor types available upon request
- Mounting: pump head mounted to a C-Face motor

1750 RPM

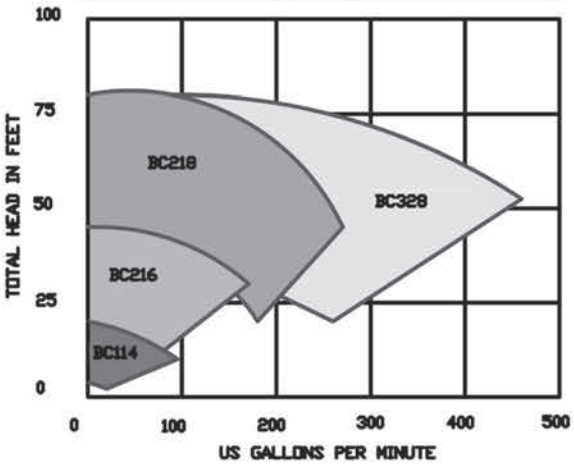

3500 RPM

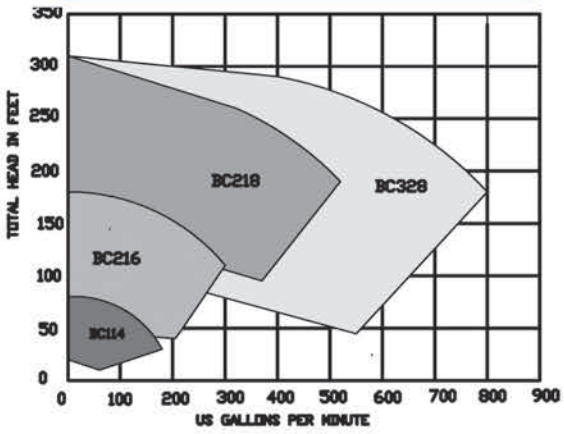


Beverage


Dairy


Oils


Water


Cosmetics


CIP Solutions

N

Hygienic Pump Carts

Dixon now offers pump carts as an added option to all of our pumps. There are two standard model sizes and others available upon request. Carts can be ordered with countless options and customised to your specifications.



Big Cart without Pump



Big Cart with Pump

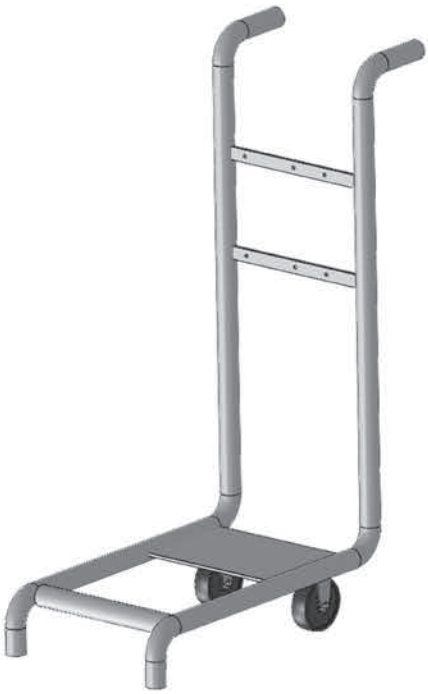

Small Cart without Pump

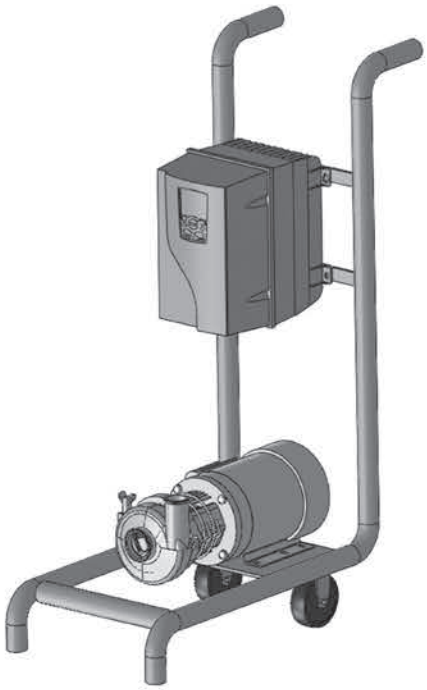

Small Cart with Pump

N

Telephone: **+44 (0)1772 323529**

Email: **sales@dixoneurope.co.uk**

Hygienic Filter / Strainers Product Specifications

Size range:
- 1" - 3" clamp

Materials:
- Inline
  - short
  - long
- Side Entry
  - long

Materials:
- 316L stainless steel

Finish:
- 3A sanitary, ID and OD



What Are Filter / Strainers Used For?

Filter Definition

A filter uses a disposable media to remove finer particulate from the stream. Dixon holds Authorization Number 1446 for the 3-A Sanitary Standard for Filters using Single Service Filter Media, Number: 10-4.

Strainer Definition

A strainer is a device used to separate solids from fluids. Here it is used for larger particulate matter from liquid or gas. It uses cleanable media.



Full Flow Filters -

Can be equipped with a variety of filtering media, down to 40 microns, media includes polyester, cotton cheesecloth and nylon mesh.

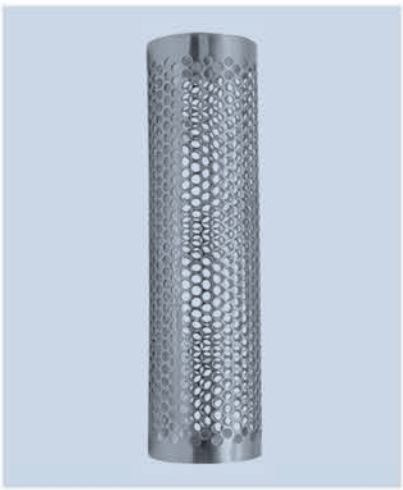

Full Flow Coarse Strainers -

1/4" or 1/8" perforations.

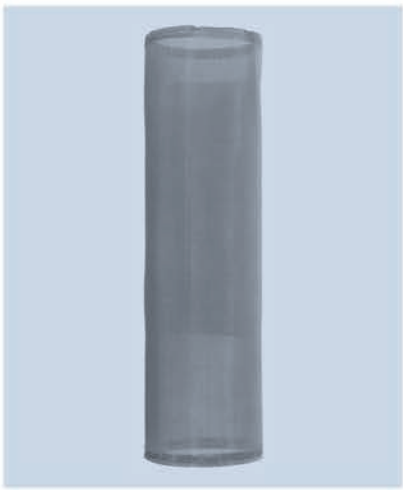

Full Flow Fine/Medium Strainers -

Can be equipped with a variety of mesh screens for removing finer particles (20 to 1130 mesh).

O

Hygienic Filter / Strainers

- In-line units ship standard with the following: spring, distributor cap, clamp gasket, 1/4" perforated back-up tube, inlet and outlet bodies and squeeze clamp
- 1/8" perforated back-up tube available, must specify when ordering
- RJT, DIN,Clamp,IDF, SMS weld ends available, call Dixon Europe for information



SHORT PART NUMBER	LONG PART NUMBER	SIZE	A SHORT	A LONG	B
BSCCQ1-R100	---	1"	15.75	--	4.00
BSCCQ1-R150	BSCCQ2-R150	1½"	15.75	35.75	4.00
BSCCQ1-R200	BSCCQ2-R200	2"	15.75	35.75	4.00
BSCCS1-R250	---	2½"	15.75	--	4.50
BSCCS1-R300	BSCCS2-R300	3"	15.75	35.75	4.50

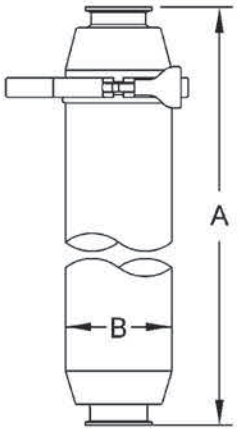

Dimensions are approximate. Engineering dimensions are available upon request. Specifications are subject to change without notice.

O

Telephone: **+44 (0)1772 323529** Email: **sales@dixoneurope.co.uk**

Bill of Materials

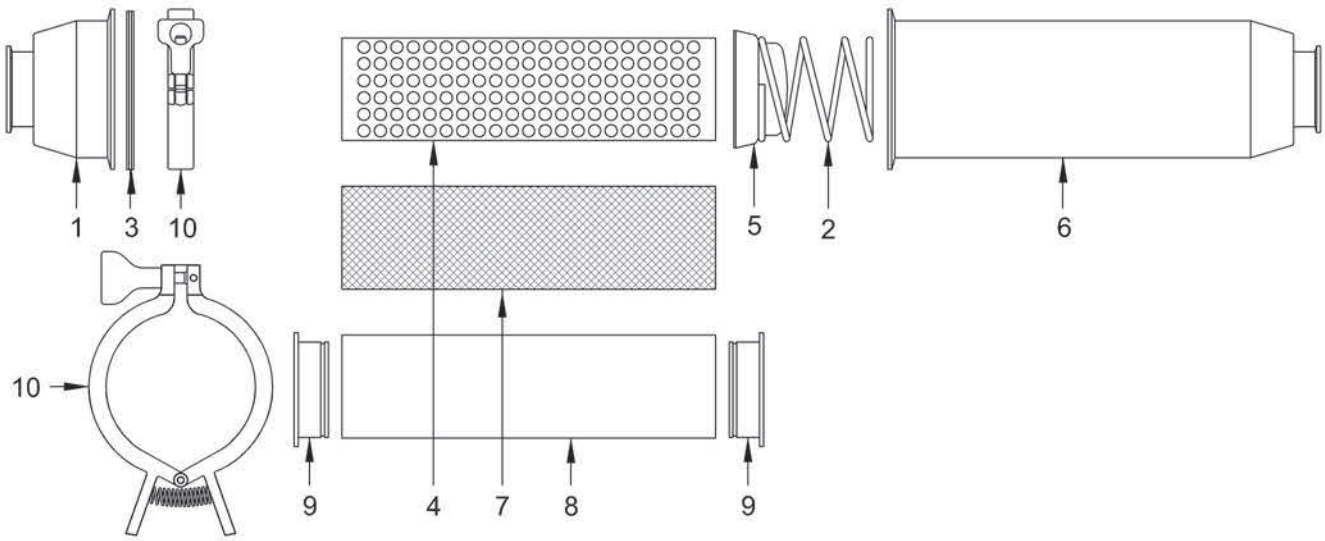

ITEM NO.	DESCRIPTION	SHORT PART NO.	LONG PART NO.	MATERIAL	QTY
1	1" strainer outlet	BS-01-R100	---	316L stainless steel	1
	1½" strainer outlet	BS-01-R150			
	2" strainer outlet	BS-01-R200			
	2½" strainer outlet	BS-01-R250	---		
	3" strainer outlet	BS-01-R300			
2	1"-2" strainer spring	BS-02-R100-200	BS-02-R100-200	316L stainless steel	1
	2½"-3" strainer spring	BS-02-R250-300	BS-02-R250-300		
3	4" clamp gasket	40MP-U400		Buna	1
	4" schedule 5 clamp gasket	40MPV-U400			
4	1"-2" back-up tube with 1/8" perforations	BS-1418-R100-200	BS-2418-R100-200	316L stainless steel	1
	2½"-3" back-up tube with 1/8" perforations	BS-1418-R250-300	BS-2418-R250-300		
	1"-2" back-up tube with 1/4" perforations	BS-1425-R100-200	BS-2425-R100-200		
	2½"-3" back-up tube with 1/4" perforations	BS-1425-R250-300	BS-2425-R250-300		
5	1"-2" strainer cap	BS-05-R100-200		316L stainless steel	1
	2½"-3" strainer cap	BS-05-R250-300			
6	1" strainer inlet	BS-16-R100	---	316L stainless steel	1
	1½" strainer inlet	BS-16-R150	BS-26-R150		
	2" strainer inlet	BS-16-R200	BS-26-R200		
	2½" strainer inlet	BS-16-R250	---		
	3" strainer inlet	BS-16-R300	BS-26-R300		
7	1"-3" various mesh over screens (short/long)	part number on page 195		316 stainless steel	1
8	1"-3" various filter bag (short/long)	part number on page 195		various	1
9	1"-2" retaining ring used with filter bags	BS-09-U100-200		Buna	2
	2½"-3" retaining ring used with filter bags	BS-09-U250300			
10	4" squeeze clamp for 1"-2" assembly	13MHHM-Q400		CF8	1
	4" schd. 5 squeeze clamp 2½"-3" assembly	13MHHV-Q400			

Hygienic Filter / Strainers



- Side entry units ship standard with the following: spring, end cap with handle, distributor cap, clamp gasket, 1/4" perforated back-up tube, body and squeeze clamp
- 1/8" perforated back-up tube available, must specify when ordering
- RJT, DIN,Clamp,IDF, SMS weld ends available, call Dixon Europe for information

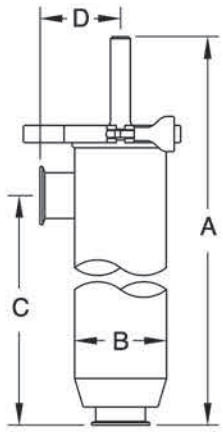

PART NUMBER	SIZE	A	B	C	D
BSCCQ3-R150	1½"	41.9	4	35	3½
BSCCQ3-R200	2"	41.9	4	35	3½
BSCCQ3-R300	3"	41.9	4½	35	3¾

Dimensions are approximate. Engineering dimensions are available upon request. Specifications are subject to change without notice.

O

Telephone: **+44 (0)1772 323529** Email: **sales@dixoneurope.co.uk**

Bill of Materials

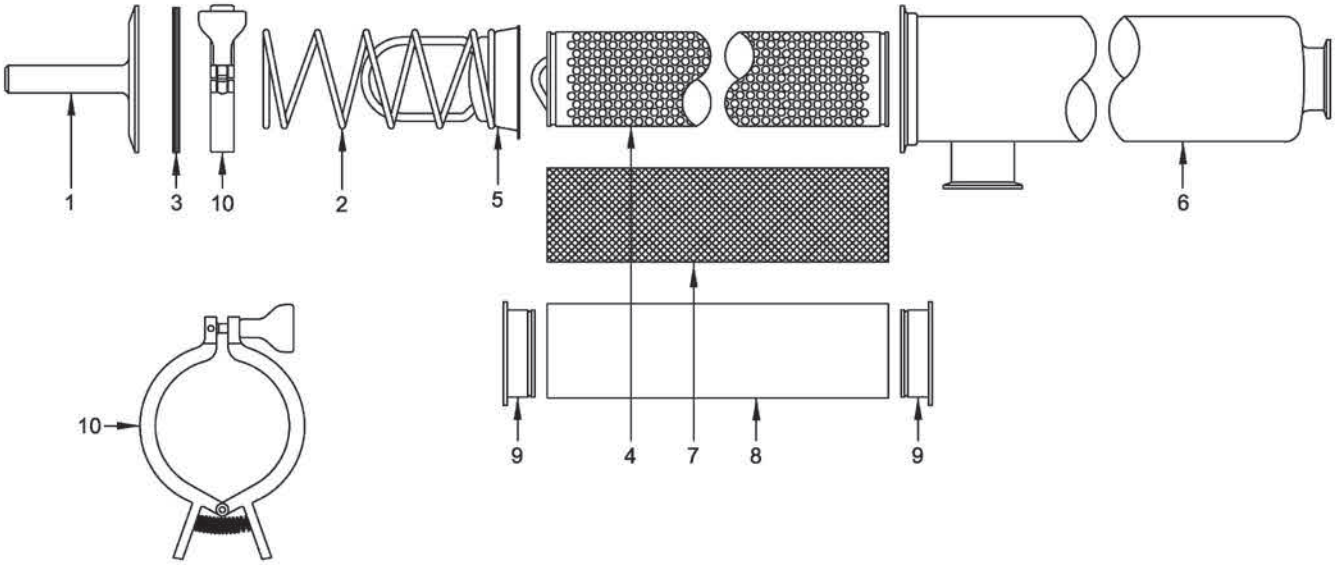

ITEM NO.	DESCRIPTION	1½" AND 2" PART #	3" PART #	MATERIAL	QTY
1	end cap with handle	**BS-31-R100-200**	**BS-31-R250-300**	316L stainless steel	1
2	strainer spring	**BS-32-R100-200**	**BS-32-R250-300**	316L stainless steel	1
3	clamp gasket	**40MP-U400**	**40MPV-U400**	Buna	1
4	back-up tube with 1/8" perforations	**BS-1418-R100-200**	**BS-2418-R100-200**	316L stainless steel	1
	back-up tube with 1/4" perforations	**BS-1425-R100-200**	**BS-2425-R100-200**		
5	distributor cap	**BS-35-R100-200**	**BS-35-R250-300**	316L stainless steel	1
6	1½" strainer body	**BS-36-R150**	**---**	316L stainless steel	1
	2" strainer body	**BS-36-R200**	**---**		
	3" strainer body	**---**	**BS-36-R300**		
7	various mesh over screens	**part number on page 195**		316 stainless steel	1
8	various filter bag	**part number on page 195**		various	1
9	retaining ring used with filter bags	**BS-09-U100-200**	**BS-09-U250300**	Buna	2
10	squeeze clamp for assembly	**13MHHM-Q400**	**13MHHV-Q400**	CF8	1

O

Replacement Filters

• Filter medium are special order and minimum quantities apply. Not included with base unit.

SIZE	MICRON RATING	DESCRIPTION	SHORT PART NUMBER	LONG/SIDE ENTRY PART NUMBER
1" - 2"	38	nonwoven rayon (glued seam)	**BF30A-100-200**	**BF302A-100-200**
2½" - 3"	38	nonwoven rayon (glued seam)	**BF30A-250-300**	**BF302A-250-300**
1" - 2"	513	woven knapped cotton flannel	**BF30B-100-200**	**BF302B-100-200**
2½" - 3"	513	woven knapped cotton flannel	**BF30B-250-300**	**BF302B-250-300**
1" - 2"	300	cheese cloth, single thickness cotton	**BF30C-100-200**	**BF302C-100-200**
2½" - 3"	300	cheese cloth, single thickness cotton	**BF30C-250-300**	**BF302C-250-300**
1" - 2"	765	nylon, 26/29 mesh, rectangular opening, (.025 x .030)	**BF30D-100-200**	**BF302D-100-200**
2½" - 3"	765	nylon, 26/29 mesh, rectangular opening, (.025 x .030)	**BF30D-250-300**	**BF302D-250-300**
1" - 2"	40-42	nonwoven rayon	**BF30E-100-200**	**BF302E-100-200**
2½" - 3"	40-42	nonwoven rayon	**BF30E-250-300**	**BF302E-250-300**
1" - 2"	<40	nonwoven rayon	**BF30F-100-200**	**BF302F-100-200**
2½" - 3"	<40	nonwoven rayon	**BF30F-250-300**	**BF302F-250-300**
1" - 2"	420	woven nylon, 40 mesh	**BF30G-100-200**	**BF302G-100-200**
2½" - 3"	420	woven nylon, 40 mesh	**BF30G-250-300**	**BF302G-250-300**

Wire Cloth Mesh Over Screens

• Not all sizes are stocked additional sizes may be available (5 piece minimum), call the factory. Not included with base unit.

SIZE	MICRON RATING	SQUARE MESH	SPACE BETWEEN WIRES	PERCENT OF OPEN AREA	SHORT PART NUMBER	LONG/SIDE ENTRY PART NUMBER
1" - 2"	864	20	0.034	46.2	**BS20-100-200**	**BS202-100-200**
2½" - 3"	864	20	0.034	46.2	**BS20-250-300**	**BS202-250-300**
1" - 2"	381	40	0.015	36.0	**BS40-100-200**	**BS402-100-200**
2½" - 3"	381	40	0.015	36.0	**BS40-250-300**	**BS402-250-300**
1" - 2"	229	60	0.009	30.3	**BS60-100-200**	**BS602-100-200**
2½" - 3"	229	60	0.009	30.3	**BS60-250-300**	**BS602-250-300**
1" - 2"	178	80	0.007	31.4	**BS80-100-200**	**BS802-100-200**
2½" - 3"	178	80	0.007	31.4	**BS80-250-300**	**BS802-250-300**
1" - 2"	140	100	0.006	30.3	**BS100-100-200**	**BS1002-100-200**
2½" - 3"	140	100	0.006	30.3	**BS100-250-300**	**BS1002-250-300**

O

Pressure Drop Curves for Filter and Strainer

Water at ambient temperature

• maximum flow for short units is 125 GPM

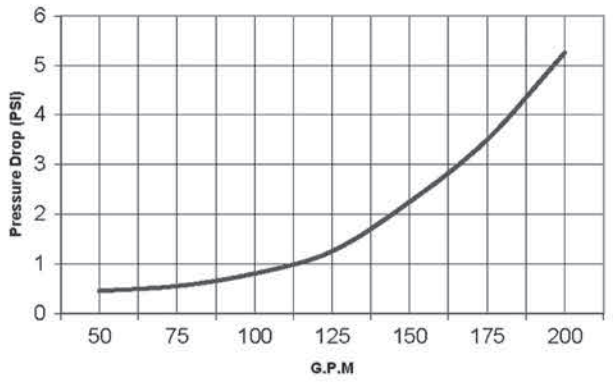

Telephone: **+44 (0)1772 323529** Email: **sales@dixoneurope.co.uk**

Sample Valves

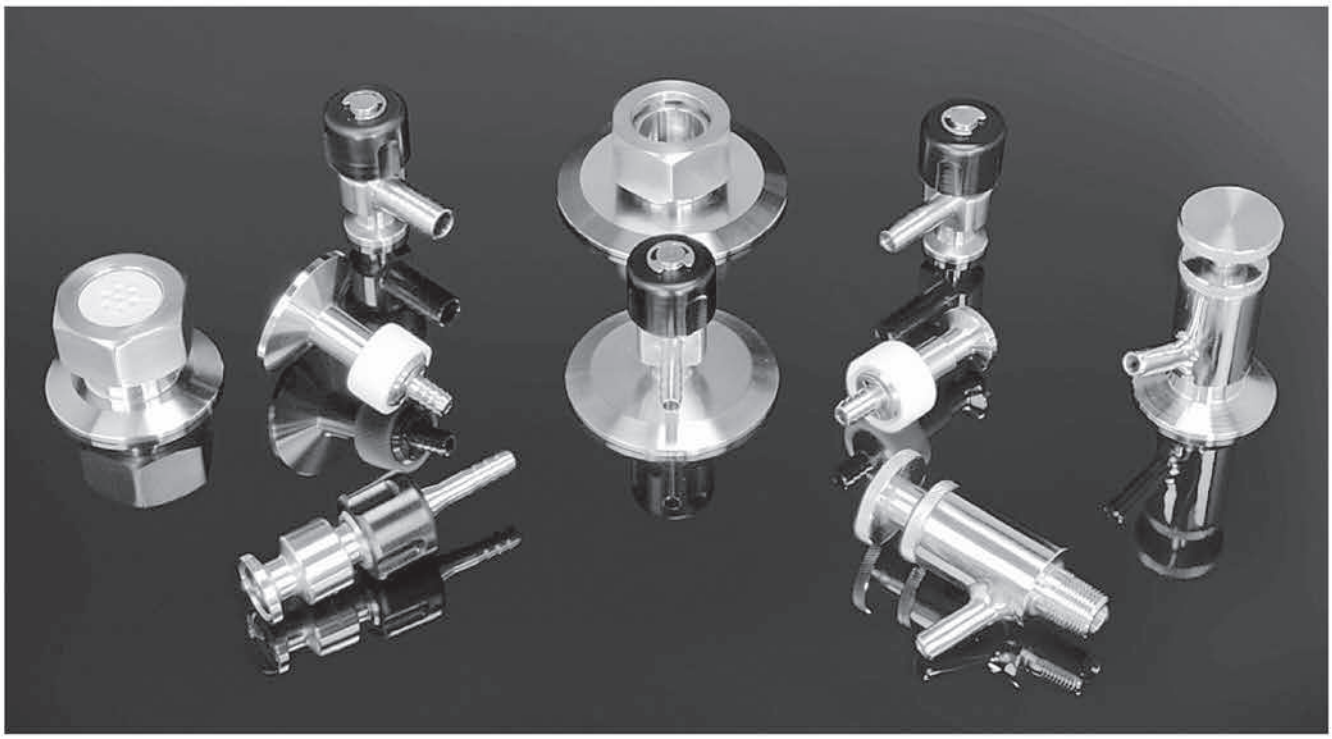

Businesses from food and beverage to pharmaceutical and cosmetics can now rely on Dixon Hygienic for their sampling needs with Dixon sample valves.

The Dixon Hygienic sample valve is a hygienic valve for use in stainless steel process systems. These valves are simple, rugged and above all, dependable. Dixon sample valves are made from stainless steel and are available in various sizes, ½" to 4" offering clamp and NPT end configurations, others also available as special order.

Dixon Hygienic offers inline and angle valves with a smooth or barbed outlet depending on your need.

Economical Dixon sample valves are 100% factory tested for the extra security you require. Maintenance is easy using one of Dixon Hygienic's repair kits, quickly returning the valve to service.

316L Angle Sample Valve

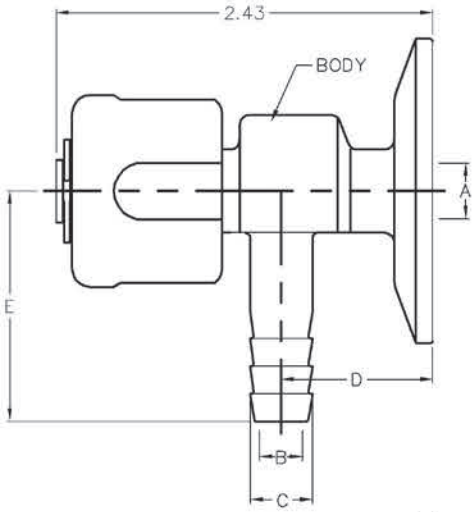

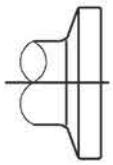

FRACTIONAL TRICLAMP



- all 316L stainless wetted part construction
- standard finish to 20 Ra ID / 32 Ra OD
- Viton® stem seal FDA approved
- fully traceable (material test reports)
- domed virgin PTFE seat for positive closure
- tapered hygienic clamp connection prevents product back flow when installed in-line
- set screw stop prevents accidental removal of stem from valve body
- black nylon nut cover allows hand operation even with hot products
- minimal internal dead-leg area
- end connections available: clamp and buttweld
- sizes available: ½" - 1½"
- temperature rating: (300°F) 149°C @ 200 PSI

SIZE		PART NUMBER	DIMENSIONS (inches)					WEIGHT (lbs)
CLAMP	BARB		A	B	C	D	E	
½"	1/4"	BSVACV-R050025	0.218	0.187	0.312	0.972	1.50	0.250
½"	3/8"	BSVACV-R050375	0.218	0.218	0.405	0.952	1.50	0.375
½"	1/2"	BSVACV-R050050	0.218	0.375	0.540	0.878	1.50	0.500
1"	3/8"	BSVACV-R100375	0.218	0.218	0.405	0.985	1.50	0.500
1½"	1/4"	BSVACV-R150025	0.218	0.187	0.312	0.987	1.50	0.500
1½"	3/8"	BSVACV-R150375	0.218	0.218	0.405	0.985	1.50	0.500
2"	1/4"	BSVACV-R200025	0.218	0.187	0.312	0.987	1.50	0.750

P

REPAIR KIT FOR ANGLE SAMPLE VALVE			
PART NUMBER	DESCRIPTION	MATERIAL	QTY.
BSVA-RKS	seal O-ring	PTFE Viton®	1 1

Telephone: **+44 (0)1772 323529** Email: **sales@dixoneurope.co.uk**

304 Sample Valves - BSVW*S

- 304 stainless steel
- silicone O-rings and gasket ensure a leak-proof shut-off
- surface finish polished to sanitary standards
- temperature rating: (300°F) 149°C at 200 PSI
- repair kit, BSVW-RKS, contains: (1) silicone gasket and (2) silicone O-rings



SIZE	STYLE	304 STAINLESS STEEL PART NUMBER	DIMENSIONS (inches)			OPEN	WEIGHT (lbs)
			A	B	C		
3/8"	NPT	**BSVWNS-G375**	0.360	0.235	0.378	3.58	0.72
1"	clamp	**BSVWCS-G100**	0.360	0.235	0.378	3.25	0.88
1"	butt-weld	**BSVWBS-G100**	0.360	0.235	0.235	3.58	0.72

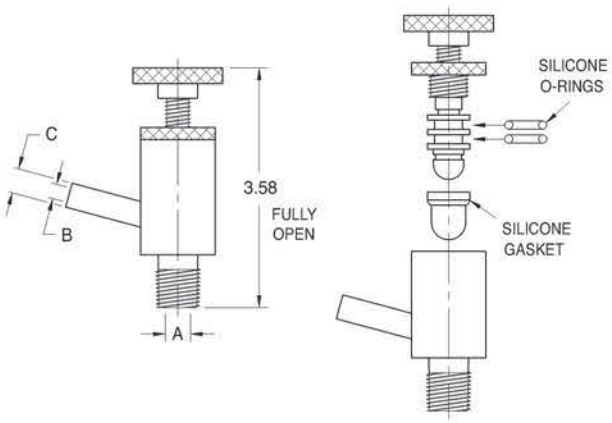

NPT style

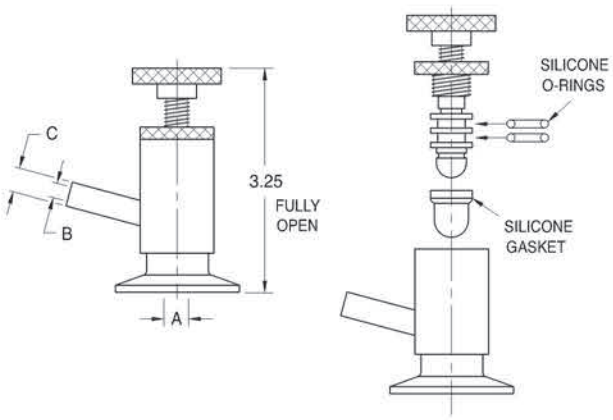

Clamp style

P

BioCheck Sampling Valves - Technical Information

RIEGER

53-06



Applications:

- The BioCheck sampling valves allow easy and safe sampling of liquids from closed systems such as vessels and pipelines.

Features:

- valve body made from solid bar
- no dead space
- drainable
- connections suitable for orbital welding
- also available with only 1 port - same price -
- hermetically sealed against environment
- optimum cleanability
- change of seals without special tools
- long life of the PTFE-bellows
- low spare part costs
- pharmaceutical, bio-pharmaceutical, biochemical, cosmetic, food and dairy and beverage

Technical Data

Material:

- in product contact: 1.4404/AISI316L
- non product contact: 1.4301/AISI304

Product Contact Seals:

- FKM bellows – PTFE

Temperatures:

- maximum standard operating temperature: 121 °C (250 °F)
- sterilisation temperature: 135 °C (275 °F) short time* (approx. 20 min)

Operating pressure:

- closing tension: max. 8 bar (116 PSI)
- version “hand wheel”: up to 16 bar (232 PSI) min. 6 bar (87 PSI)
- controlled air pressure: max.10 bar (145 PSI)

Surfaces:

- wetted product surfaces: Ra<= 0.8 µm (32), optional surfaces available
- non product contact: Ra=1.6 µm

Versions:

- S = with self-closing lever
- O = lever for open position
- P = without lever
- H = with hand wheel

Dimensions:

- Pipe ø13mm x1,5mm (1 mm = 0.0394 Inch)

*dependent upon operating conditions

Housing for BioCheck Sampling Valves

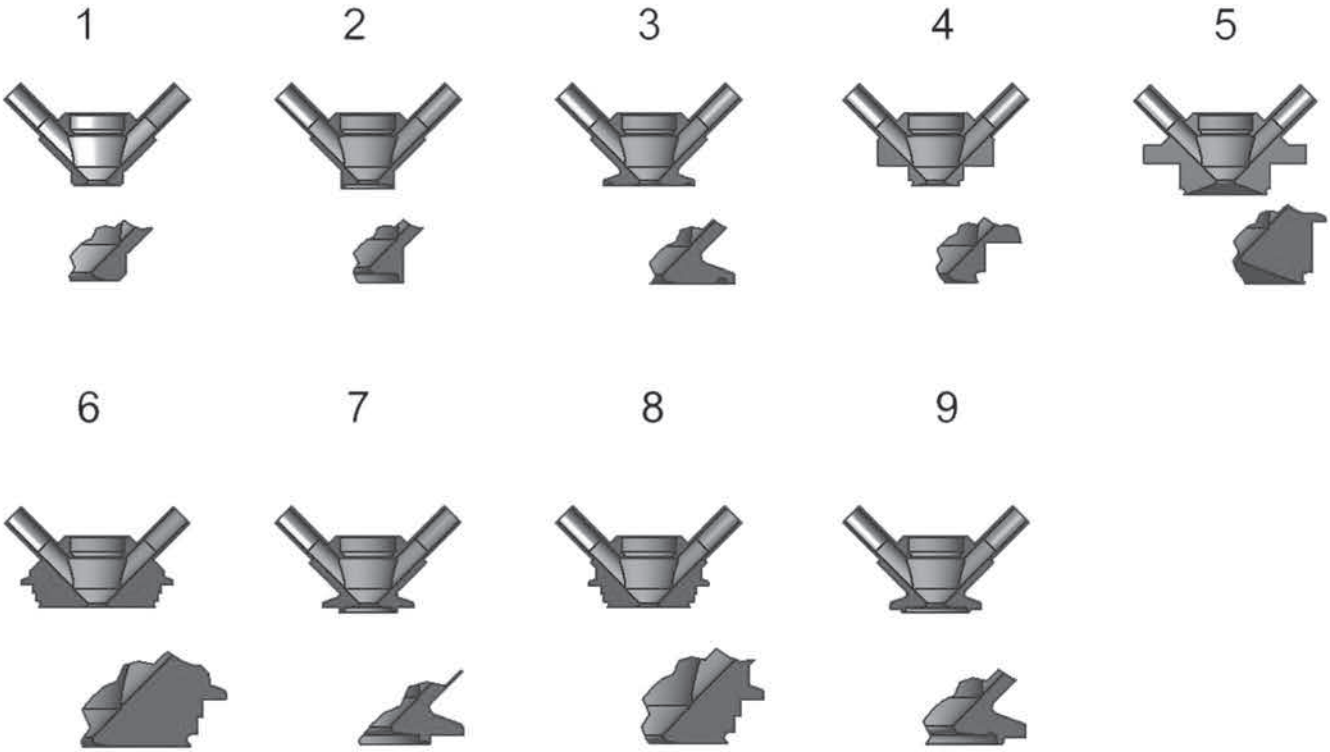

ITEM #	DESCRIPTION
1	BioCheck housing for tank
2	BioCheck housing for piping
3	BioCheck housing forTri-Clamp
4	BioCheck housing for connection BioControl
5	BioCheck housing for connection BioControl
6	BioCheck housing for Varivent-Inline body
7	BioCheck housing for clamp BioConnect Form V
8	BioCheck housing for Varivent-Inline body
9	BioCheck housing for clamp nut connection

P

Bill of Materials for Pneumatic BioCheck Sampling Valves

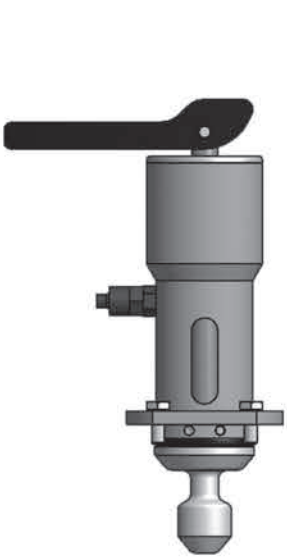

Item 1

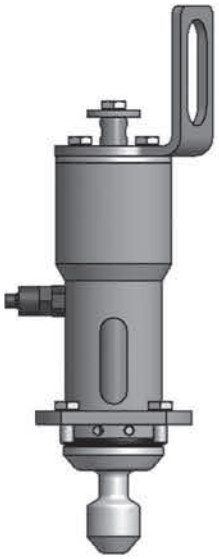

Item 2

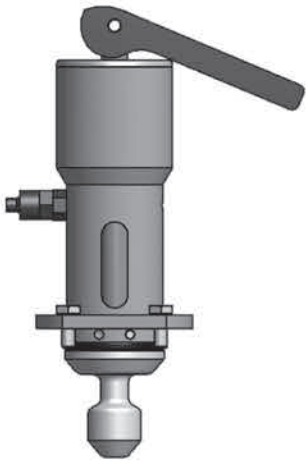

Item 3

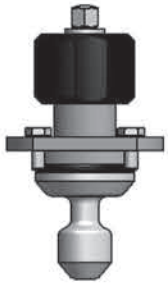

Item 4

ITEM #	DESCRIPTION	QUANTITY
1	with self-closing lever	1
2	without lever	1
3	lever for open position	1
4	with handwheel	1

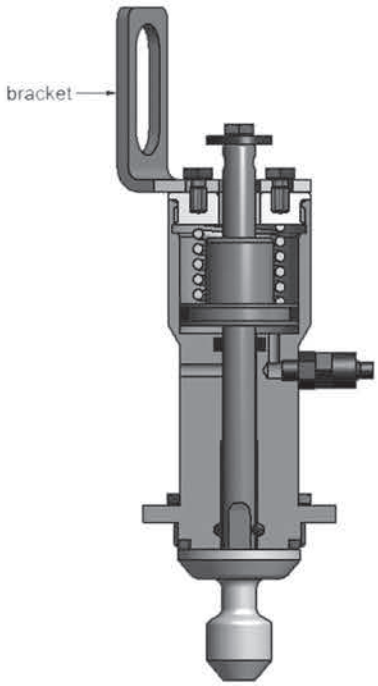

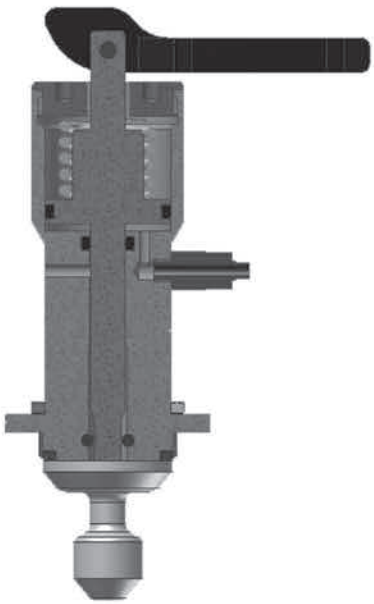

Bill of Materials for Pneumatic BioCheck Sampling Valves

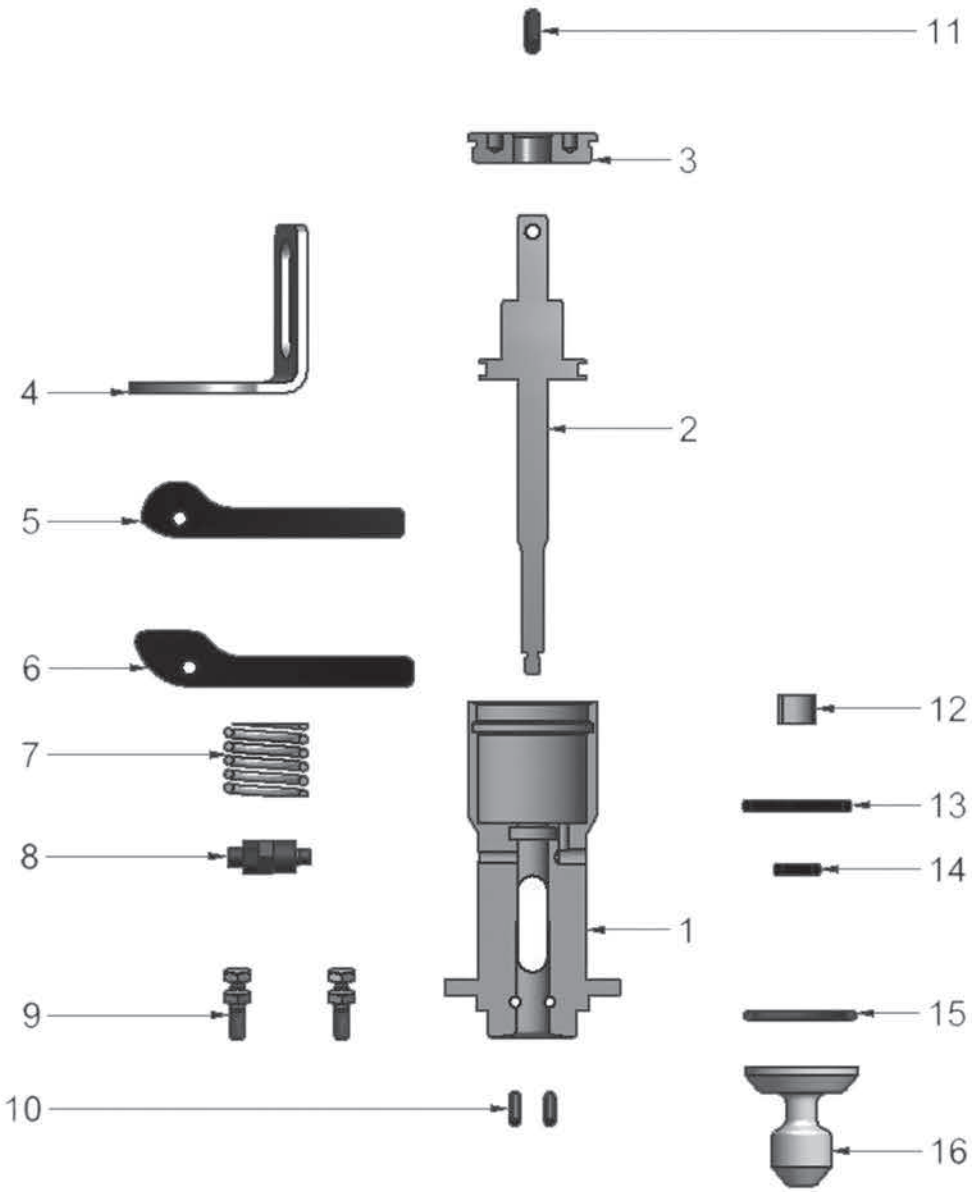

Repair Kit contains:

#15 (1) O-ring (Silicone)
#16 (1) O-ring PTFE-bellows

REPAIR KIT PART #
BCSV-RK

ITEM	DESCRIPTION	QUANTITY
1	housing	1
2	spindle	1
3	cover	1
4	bracket	1
5	Lever	1
6	Lever	1
7	spring	1
8	screwing	1
9	hexagonal screw	4
10	Cylindric pin for spindle	2
11	Cylindric pin for lever	1
12	plastic bushing	1
13	O-Ring	1
14	O-Ring for spindle	1
15	O-Ring for bellows	1

P

Bill of Materials for BioCheck Sampling Valves with Handwheel

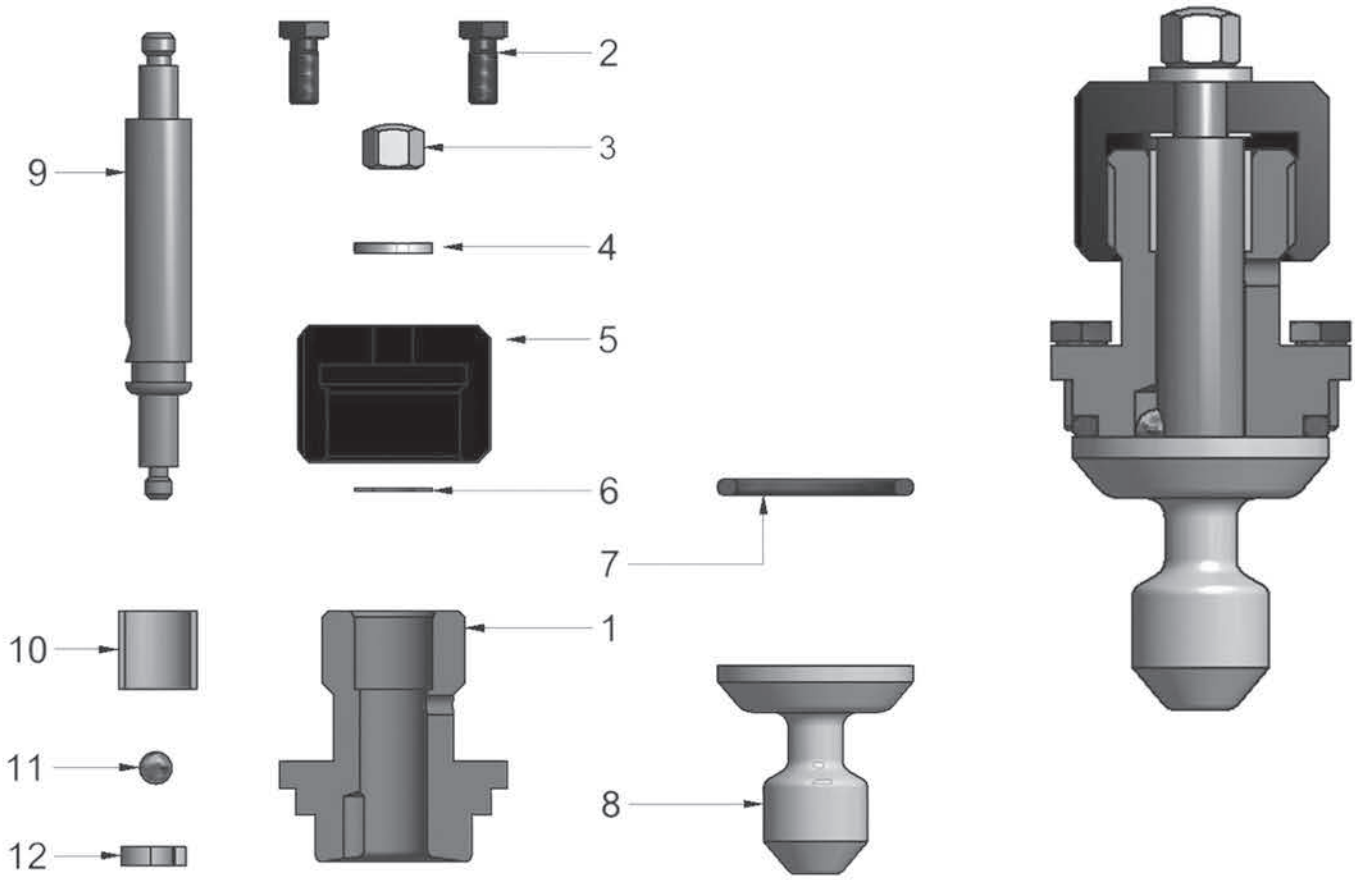

Repair Kit contains:

#7 (1) O-ring (Silicone)
#8 (1) O-ring PTFE-bellows

REPAIR KIT PART #
BCSV-RK

ITEM	DESCRIPTION	QUANTITY
1	housing	1
2	hexagonal screw	4
3	hex nut	1
4	washer	1
5	handle	1
6	wave spring washer	1
7	O-Ring for bellows	1
8	PTFE-Bellows	1
9	spindle	1
10	plastic bushing	2
11	ball	1
12	guide	1

BioCheck Combi Sampling Valves with Steam Valve

Air to Open / Spring to Close NC – with 1 CIP Valve

TYPE EL - CLASS I

3-A version not available.

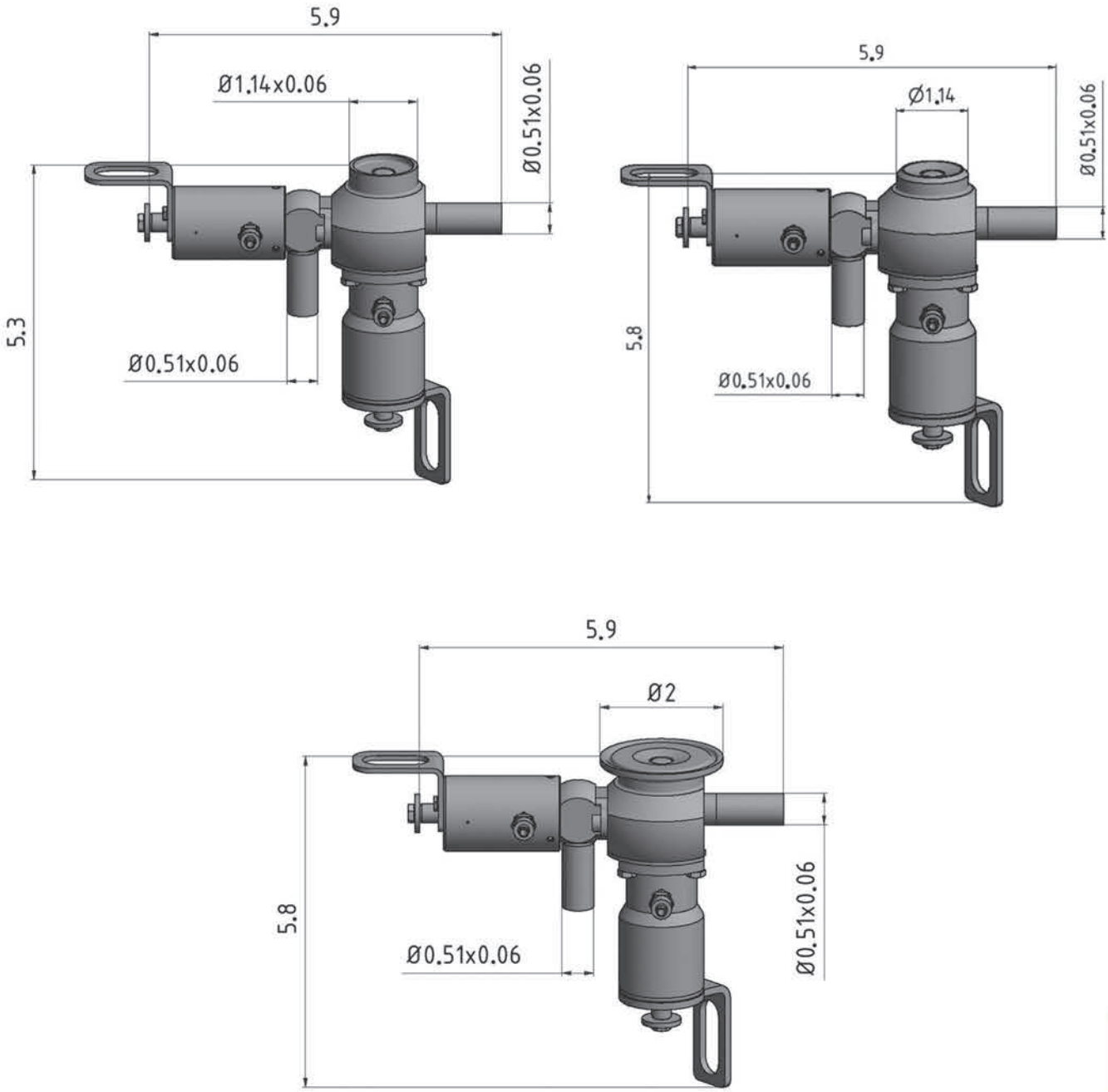

P

BioCheck Combi Sampling Valves with Steam Valve

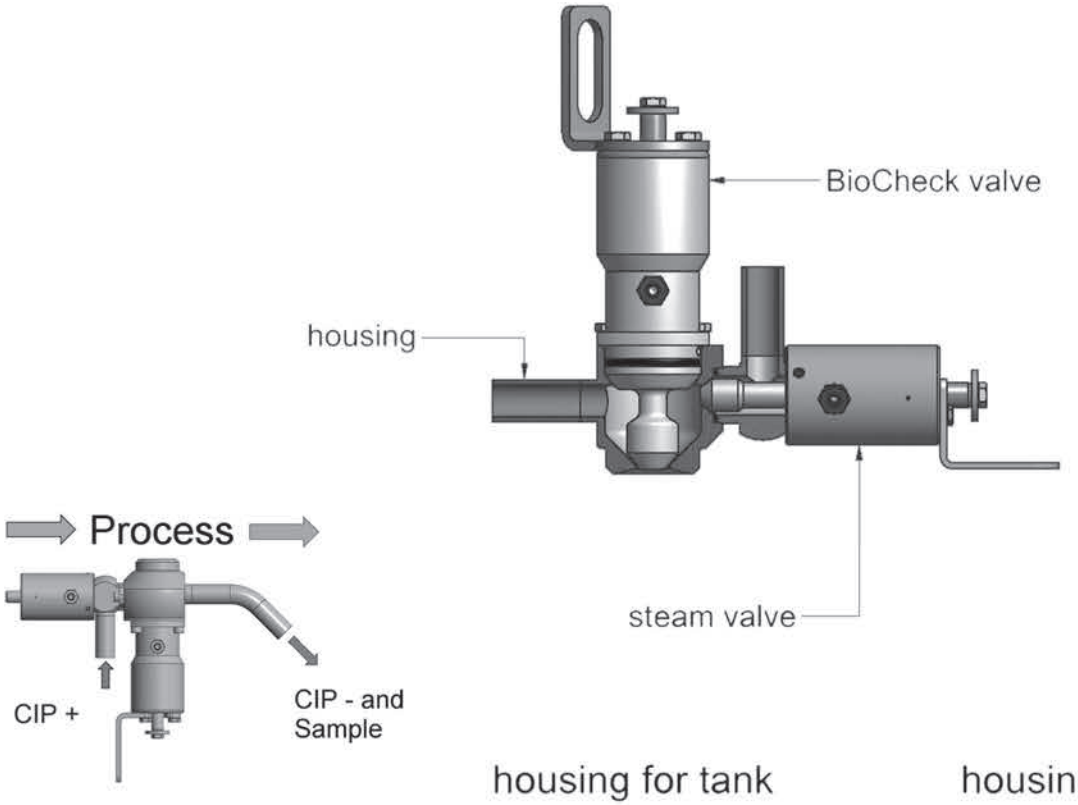

housing for tank

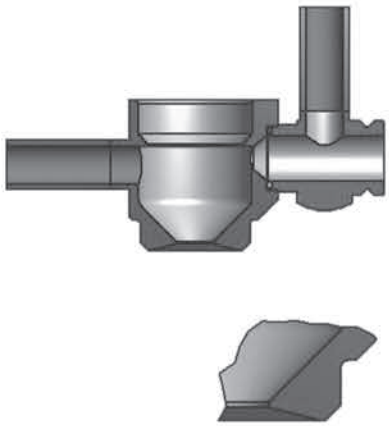

housing for piping

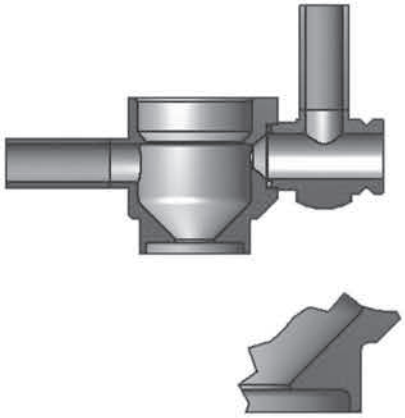

housing for clamp

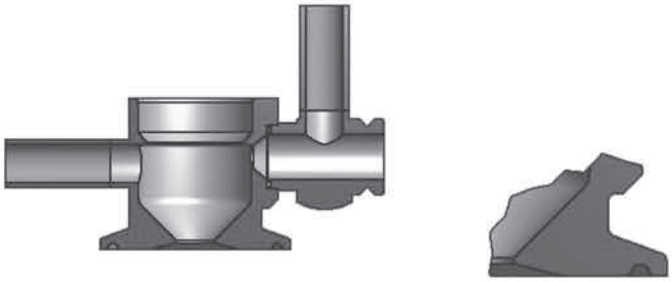

Bill of Materials for BioCheck Combi Sampling Valves with Steam Valves

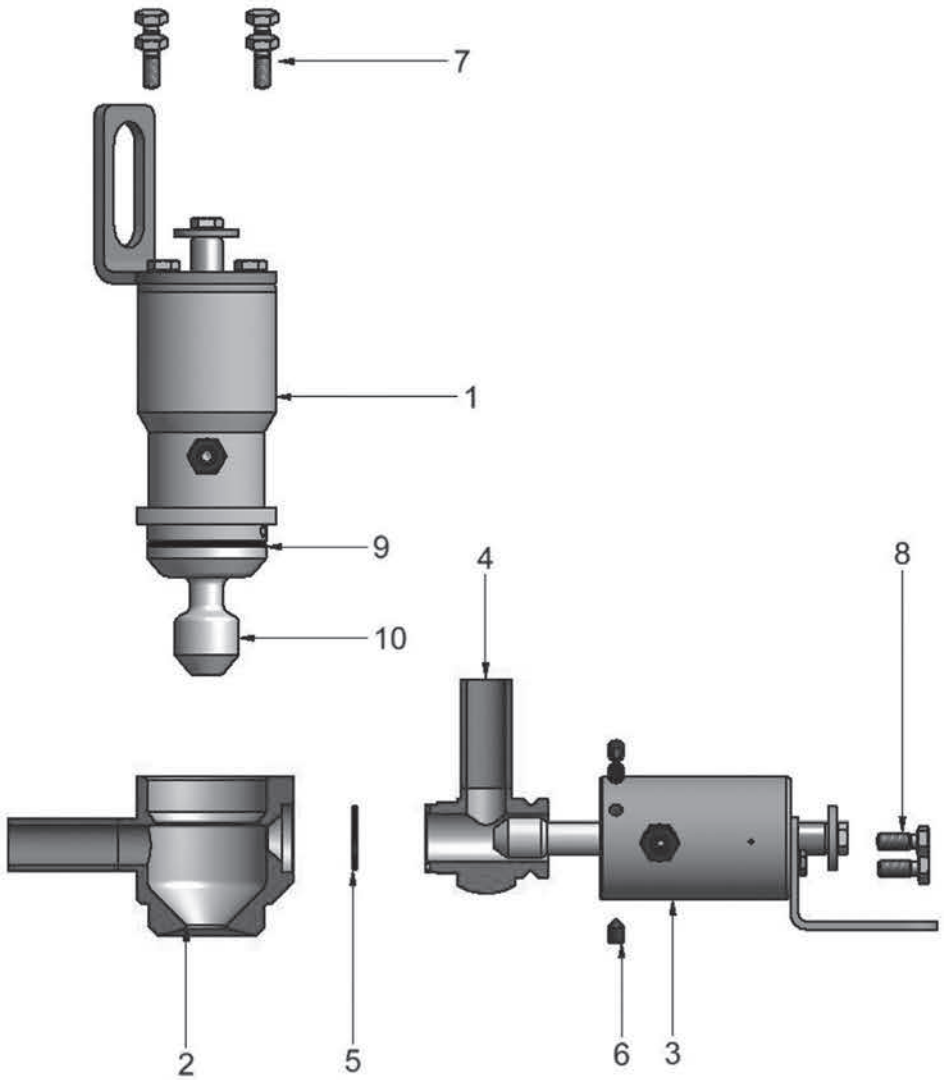

Repair Kit contains:

#9 (1) O-ring
#10 (1) PTFE-bellows

REPAIR KIT PART #
BCSV-RK

ITEM	DESCRIPTION	QUANTITY
1	Actuator BioCheck valve NC	1
2	Housing BioCheck valve	1
3	Actuator steam valve	1
4	Housing steam valve	1
5	O-Ring	1
6	screw	1
7	hexagonal screw	1
8	hexagonal screw	1
9	O-ring	4
10	PTFE-bellows	2

P

BioCheck Sampling Into Bottle





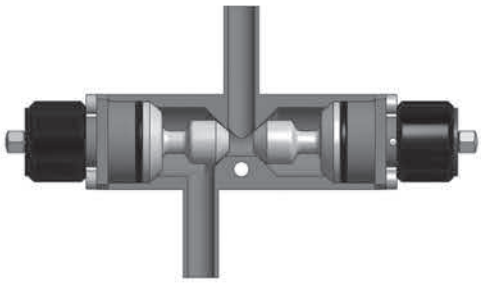

Features:

- for all usual lab bottles
- connection threading GL45 ISO
- for bottles from 100 ml to 2000 ml
- no contamination by air
- absolutely aseptic system
- with connection thread for lab air filter NPT 1/8"
- weight approx. 1.7 kg = 3.7 lb
- 3A version with hexagonal screws

Sampling procedure:

- both valves are closed
- open valve 2 (black handle)
- sterilise or rinse valve 2 (black handle)
- close valve 2 (black handle)
- open valve 1 (red handle) = sample flows into bottle

Dismantling from system

- close valve 1
- dismantle sampling head from bypass

Sampling head with
2 weld on ends ø0.51x0.06

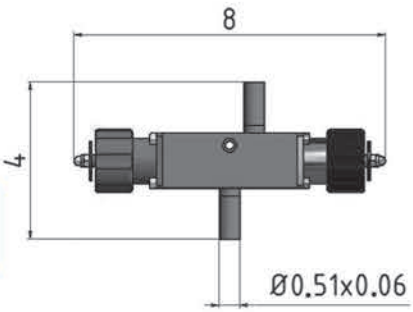

Sampling head with 2 nozzles
for quick coupling

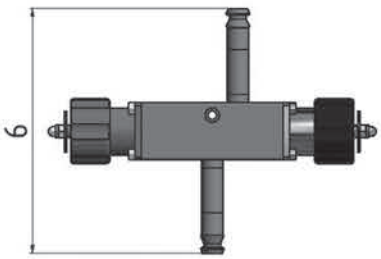

Sampling head with 2 clamps

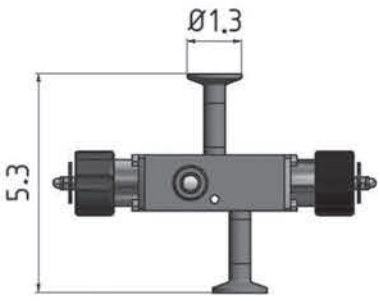

P

Telephone: **+44 (0)1772 323529**

Email: **sales@dixoneurope.co.uk**

BioCheck Sampling Into Bottle Manually

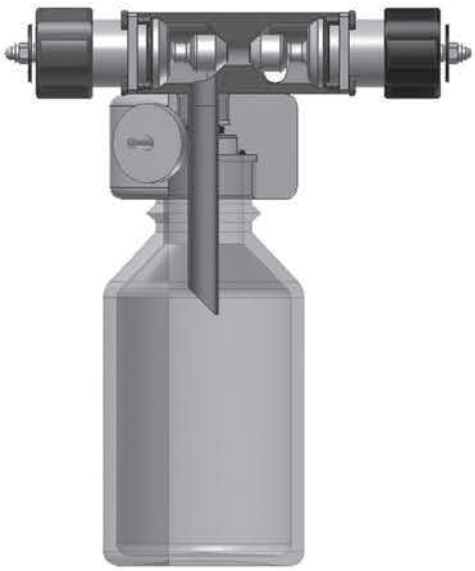



Housing List

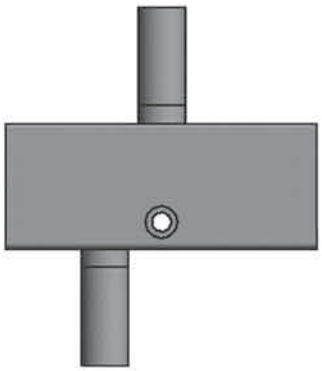

#1
2 weld ends 13 x 1.5

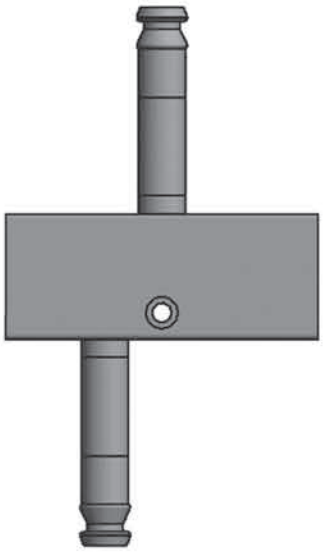

#
2 nozzles for quick coupling

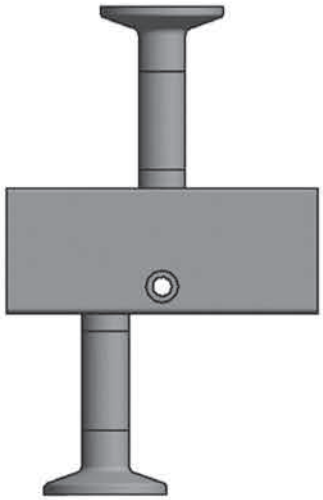

#3
2 clamp same way

P

ITEM	DESCRIPTION
1	2 weld ends 13 x 1.5
2	2 nozzles for quick coupling
3	2 clamp same way

KV Value Table

For Standard Sampling Valve

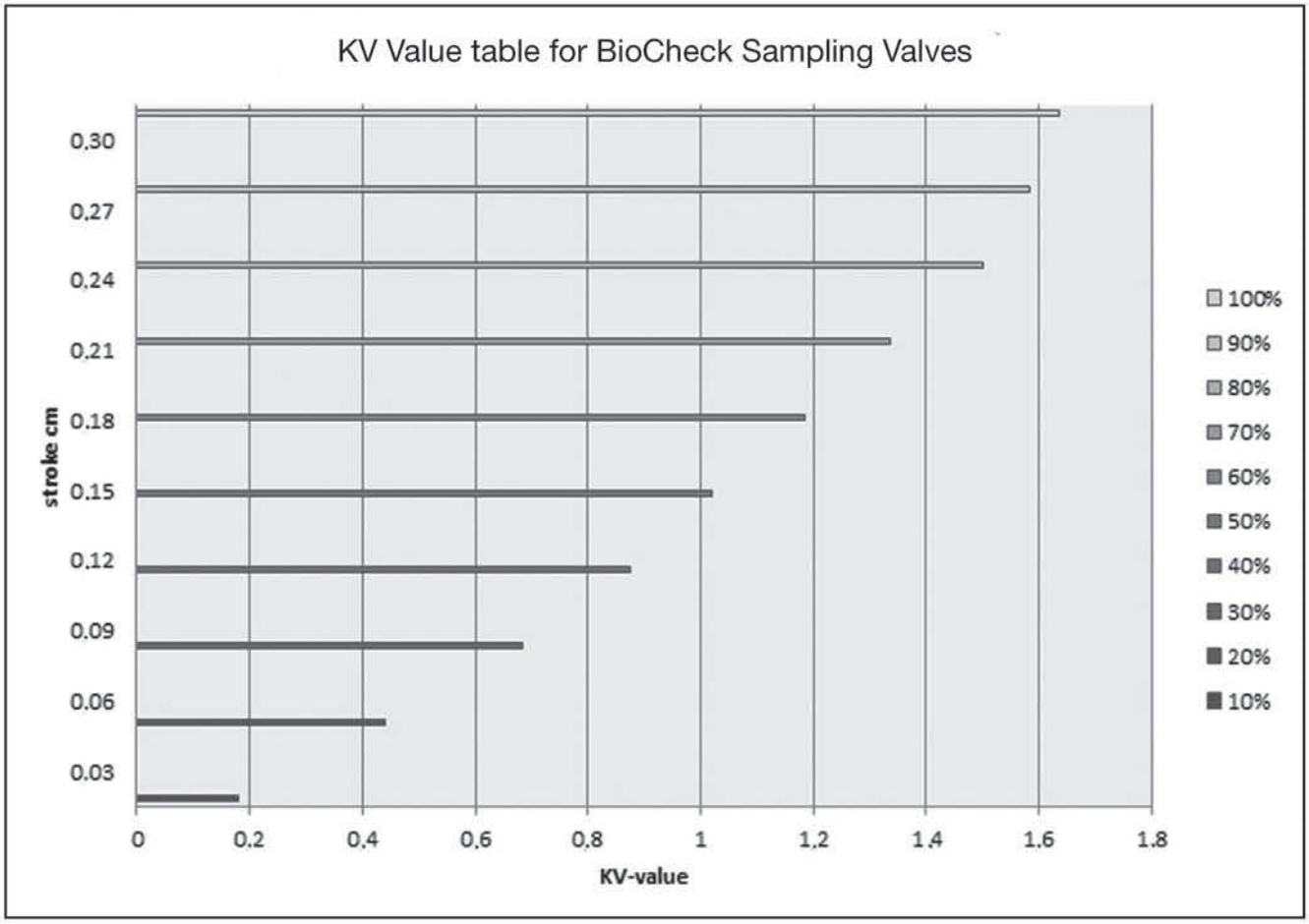

$$C_V = K_V/0.86$$

P

Telephone: **+44 (0)1772 323529** Email: **sales@dixoneurope.co.uk**

Fabrication and Tubing

Dixon Group Europe is now offering custom fabrications. We have full CAD capabilities and can provide a print for your approval.

Once the print is approved, Dixon will have the part created in-house or from a variety of manufacturers specialising in hygienic components.

Dixon can produce manufacturing from sketches supplied by the customer.

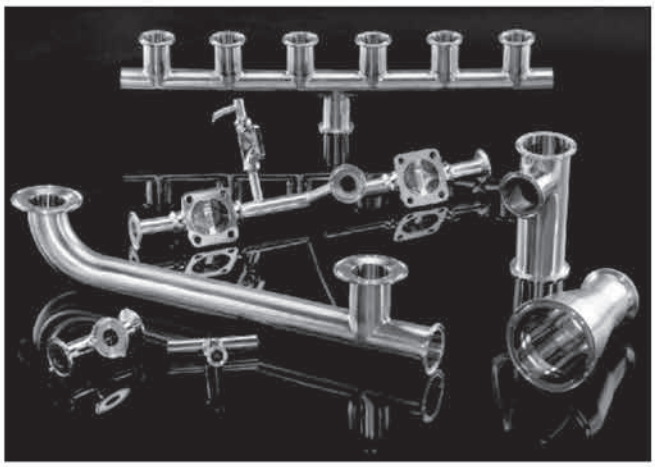

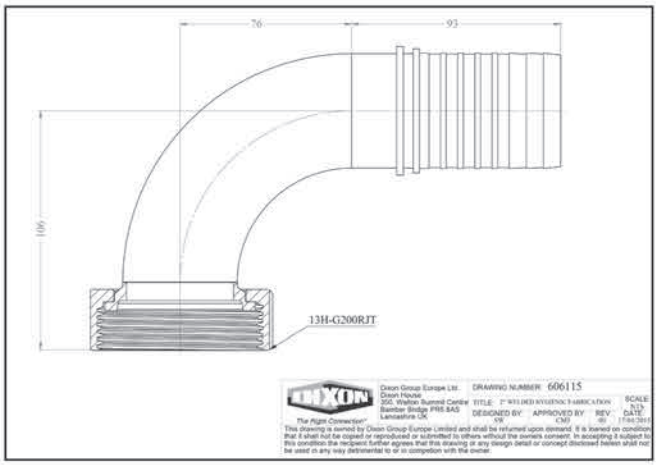

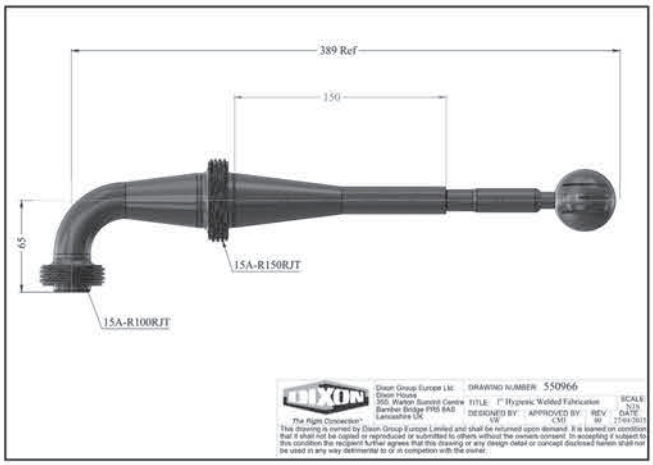

ALL HYGIENIC ASSEMBLIES ARE WELDED BY AWS D18.1 "SPECIFICATIONS FOR WELDING OF AUSTENITIC STAINLESS STEEL TUBE AND PIPE SYSTEMS IN SANITARY (HYGIENIC) APPLICATIONS" CERTIFIED WELDERS

Q

Examples of Parts Manufactured



Elbows of Various Configurations, Finishes and Materials. Welded, Polished and Machined Components



Tees of Various Configurations, Finishes and Materials



Reducers of Various Configurations, Finishes and Materials



POLISHED ID/OD TUBING		
SIZE	**NOMINAL WALL**	**316L PART NO.**
1/2"	1.5mm	**TOD-R50P**
3/4"	1.5mm	**TOD-R75P**
1"	1.5mm	**TOD-R100P**
1 1/2"	1.5mm	**TOD-R150P**
2"	1.5mm	**TOD-R200P**
2 1/2"	1.5mm	**TOD-R250P**
3"	1.5mm	**TOD-R300P**
4"	2mm	**TOD-R400P**
6"	2mm	**TOD-R600P**
8"	2mm	**TOD-R800P**

Tubing usually sold in 6 metre / 20 foot lengths.

DIN 11852 POLISHED ID/OD TUBING		
SIZE	**NOMINAL WALL**	**316L PART NO.**
DN15	1.5mm	**TOD-R100PD**
DN40	1.5mm	**TOD-R150PD**
DN50	1.5mm	**TOD-R200PD**
DN65	1.5mm	**TOD-R250PD**
DN80	1.5mm	**TOD-R300PD**
DN100	2.0mm	**TOD-R400PD**

Other sizes available on request.

Telephone: **+44 (0)1772 323529** Email: **sales@dixoneurope.co.uk**

A Guideline for Compound Selection for Use with Various Fluids and Chemicals

Note: The information contained in these tables was derived from several sources and is to be used as a general guide only Compounds suitable for any specification application rests solely by the end user. Dixon assumes no responsibility. All effect ratings assume static conditions at ambient temperatures.

A - satisfactory **B** - fair **C** - severe effect; except for some static applications **D** - unsatisfactory **E** - insufficient information

FLUID	Buna	EPDM	Viton®	PTFE	Silicone
Acetaldehyde	D	A	D	A	B
Acetamide	A	A	B	A	B
Acetic Acid, 30%	B	A	B	A	A
Acetone	D	A	D	A	C
Acetophenone	D	A	D	A	D
Acetyl Chloride	D	D	A	A	C
Acetylene	A	A	A	A	B
Acrylonitrile	D	D	C	A	D
Adipic Acid	A	A	E	E	E
Ammonia Gas (cold)	A	A	D	A	A
Ammonium Choride (aq)	A	A	A	A	E
Ammonium Hydroxide (conc.)	D	A	B	A	A
Ammonium Nitrate (aq)	A	A	E	A	E
Ammonium Nitrite (aq)	A	A	E	E	B
Ammonium Phospate (aq)	A	A	E	A	A
Ammonium Sulfate (aq)	A	A	D	A	E
Amyl Acetate (Banana Oil)	D	A	D	A	D
Amyl Alcohol	B	A	B	A	D
Amyl Borate	A	D	A	A	E
Arsenic Acid	A	A	A	E	A
Arsenic Trichloride (aq)	A	C	E	E	E
Barium Chloride (aq)	A	A	A	A	A
Barium Hydroxide (aq)	A	A	A	A	A
Barium Sulfate (aq)	A	A	A	A	A
Barium Sulfide (aq)	A	A	A	A	A
Benzaldehyde	D	A	D	A	B
Benzene	D	D	A	A	D
Benzoic Acid	C	C	A	A	C
Benzoyl Chloride	D	D	A	A	E
Benzyl Alcohol	D	A	A	A	B
Benzyl Chloride	D	D	A	A	D
Boric Acid	A	A	A	A	A
Brine	A	A	A	A	A
Bromine, Anhydrous	D	D	A	E	D
Bromine Water	D	B	A	E	D
Butadiene	D	C	A	A	D
Butane	A	D	A	A	D
Butyl Acetate	D	C	D	E	D
Butyl Acetyl Ricinoleate	C	A	A	E	E

FLUID	Buna	EPDM	Viton®	PTFE	Silicone
Butyl Alcohol	A	B	A	A	B
Butyl Amine	C	B	D	E	D
Butyl Benzoate	D	B	A	E	E
Butyl Carbitol	D	A	A	A	D
Butyl Cellosoive	D	A	D	A	E
Butyl Oleate	D	B	A	E	E
Butyl Stearate	B	C	A	E	E
Butylene	B	D	A	E	D
Butyraldehyde	D	B	D	E	D
Carbolic Acid (Phenol)	D	B	A	A	D
Carbon Bisulfide	C	D	A	E	D
Carbon Dioxide	A	B	A	E	B
Carbonic Acid	B	A	A	E	A
Carbon Monoxide	A	A	A	A	A
Carbon Tetrachloride	C	D	A	A	D
Castor Oil	A	B	A	A	A
Cellosoive Acetate	D	B	D	A	D
China Wood Oil (Tung Oil)	A	C	A	A	D
Chlorine (wet)	D	C	A	A	D
Chlorine Dioxide	D	C	A	A	E
Chloroacetic Acid	D	A	D	A	E
Chloroacetone	D	A	D	E	D
Chlorobenzene	D	D	A	E	D
Chlorobromomethane	D	B	A	E	D
Chloroform	D	D	A	A	D
Chlorotoluene	D	D	A	E	D
Chrome Plating Solutions	D	C	A	A	C
Chromic Acid	D	B	A	A	B
Cod Liver Oil	A	A	A	A	B
Copper Acetate (aq)	B	A	D	E	D
Copper Chloride (aq)	A	A	A	A	A
Copper Cyanide (aq)	A	A	A	A	A
Copper Sulfate (aq)	A	A	A	A	A
Creosote (coal tar)	A	D	A	A	D
Cresylic Acid	D	D	A	E	D
Cyclohexane	A	D	A	A	D
Cyclohexanol	C	C	A	E	D
Cyclohexanone	D	B	D	E	D
Denatured Alcohol	A	A	A	A	A

R

FLUID	Buna	EPDM	Viton®	PTFE	Silicone
Detergent Solutions	A	A	A	A	A
Diacetone Alcohol	D	A	D	A	B
Dibenzyl Ether	D	B	D	A	E
Dibenzyl Sebecate	D	B	B	E	C
Dibromoethyl Benzene (Alkazene)	D	D	B	E	D
Dibutyl Amine	D	C	D	E	C
Dibutyl Ether	D	C	C	E	D
Dibutyl Phthalate	D	B	C	A	B
Dibutyl Sebecate	D	B	B	E	B
O-Dichlorobenzene	D	D	A	E	D
Dichloro-Isopropyl Ether	D	C	C	E	D
Diethylamine	B	B	D	A	B
Diethyl Benzene	D	D	A	E	D
Diethyl Ether	D	D	D	E	D
Diethylene Glycol	A	A	A	E	B
Diethyl Sebecate	B	B	B	E	B
Diisobutylene	B	D	A	E	D
Diisopropyl Benzene	D	D	A	E	E
Diisopropyl Ketone	D	A	D	E	D
Diisopropylidence Acetone	D	C	D	E	D
Dimethyl Aniline (Xylidine)	C	B	D	E	D
Dimethyl Ether (Methyl Ether)	A	D	A	E	A
Dimethyl Formamide	B	B	D	E	B
Dimethyl Phthalate	D	B	B	E	E
Dinitrotoluene	D	D	D	E	D
Dioctyl Phthalate	C	B	B	E	C
Dioctyl Sebecate	D	B	B	E	C
Dioxane	D	B	D	E	D
Dioxolane	D	B	D	E	D
Dipentene	A	D	A	E	D
Diphenyl (Phenylbenzene)	D	D	A	E	D
Diphenyl Oxides	D	D	A	E	C
Dowtherm Oil	D	D	A	A	C
Ethane	A	D	A	A	D
Ethanolamine	B	B	D	E	B
Ethyl Acetate	D	B	D	E	B
Ethyl Acetoacetate	D	B	D	E	B
Ethyl Acrylate	D	B	D	E	B
Ethyl Alcohol	A	A	C	A	A
Ethyl Benzene	D	D	A	A	D
Ethyl Benzoate	D	A	A	A	D
Ethyl Cellosoive	D	B	D	E	D
Ethyl Cellulose	B	B	D	A	C
Ethyl Chloride	A	C	A	A	D
Ethyl Chlorocarbonate	D	B	A	A	D
Ethyl Chloroformate	D	B	D	E	D

FLUID	Buna	EPDM	Viton®	PTFE	Silicone
Ethyl Ether	C	C	D	A	D
Ethyl Pentachlorobenzene	D	D	A	A	D
Ethylene	A	B	A	A	E
Ethylene Chloride	D	C	B	E	D
Ethylene Diamine	A	A	D	E	A
Ethylene Dichloride	D	C	A	A	D
Ethylene Glycol	A	A	A	A	A
Fluoroboric Acid	A	A	E	E	E
Freon 11	B	D	A	A	D
Freon 12	A	B	B	A	D
Freon 22	D	A	D	A	D
Fumaric Acid	A	B	A	E	B
Gallic Acid	B	B	A	A	E
Gasoline	B	D	A	A	D
Glucose	A	A	A	A	A
Glycerin	A	A	A	A	A
Hexane	A	D	A	A	D
Hexyl Alcohol	A	C	A	A	B
Hydrazine	B	A	D	A	C
Hydrobromic Acid	D	A	A	E	D
Hydrocyanic Acid	B	A	A	A	C
Hydrofluoric Acid (conc.) cold	D	C	A	A	D
Hydrofluosilicic Acid	B	B	A	E	D
Hydrogen Gas	A	A	A	A	C
Hydrogen Peroxide (90%)	D	B	B	E	B
Hydrogen Sulfide (wet) cold	D	A	D	E	C
Hydroquinone	C	B	B	A	E
Iodoform	E	D	E	E	E
Isobutyl Alcohol	B	A	A	A	A
Isooctane	A	D	A	E	D
Isopropyl Acetate	D	B	D	A	D
Isopropyl Alcohol	B	A	A	A	A
Isopropyl Chloride	D	D	A	A	D
Isopropyl Ether	B	D	D	A	D
Kerosene	A	D	A	A	D
Lacquers	D	D	D	A	D
Lactic Acid (cold)	A	A	A	A	A
Lead Acetate (aq)	B	A	D	E	D
Lead Nitrite (aq)	A	A	E	E	B
Lime Bleach	A	A	A	E	B
Linoleic Acid	B	D	B	A	B
Maleic Acid	D	B	A	A	E
Malic Acid	A	B	A	E	B
Methane	A	D	B	A	D
Methyl Acetate	D	A	D	A	D
Methyl Acrylate	D	B	D	A	D

INFORMATION COMPILED FROM NEWMAN GASKETS WEBSITE, WWW.NEWMANGASKET.COM

FLUID	Buna	EPDM	Viton®	PTFE	Silicone
Methylacrylic Acid	D	B	D	E	D
Methyl Alcohol	A	A	D	A	A
Methyl Bromide	B	D	A	A	E
Methyl Butyl Ketone	D	A	D	A	C
Methyl Cellosoive	C	B	D	A	D
Methyl Chloride	D	C	B	A	D
Methyl Cyclopentane	D	D	B	E	D
Methylene Chloride	D	C	B	E	D
Methyl Ether	A	D	A	A	A
Methyl Ethyl Ketone	D	A	D	A	D
Methyl Isobutyl Ketone	D	B	D	A	D
Methyl Methacrylate	D	C	D	A	D
Milk	A	A	A	A	A
Mineral Oil	A	C	A	C	B
Monoethanol Amine	D	A	D	E	B
Monomethyl Ether	A	D	A	E	A
Monovinyl Acetylene	A	A	A	A	B
Mustard Gas	E	A	E	E	A
Naphthalenic Acid	B	D	A	A	D
Natural Gas	A	D	A	A	A
Nickel Acetate (aq)	B	A	D	E	D
Nickel Chloride (aq)	A	A	A	A	A
Nickel Sulfate (aq)	A	A	A	A	A
Nitric Acid (dilute)	D	B	A	A	B
Nitrobenzene (Ligroin)	A	D	A	A	D
Nitroethane	D	B	D	A	D
Nitrogen Tetroxide	D	C	D	A	D
Octachlorotoluene	D	D	A	E	D
Octadecane	A	D	A	E	D
N-Octane	B	D	A	A	D
Octyl Alcohol	B	C	A	A	B
Oleic Acid	C	D	B	A	D
Oxalic Acid	B	A	A	E	B
Oxygen - Cold	B	A	A	A	A
Ozone	D	A	A	E	A
Palmitic Acid	A	B	A	E	D
Perchloric Acid	D	B	A	E	D
Phenyl Ethyl Ether	D	D	D	E	D
Phosphoric Acid - 20%	B	A	A	E	B
Phosphorus Trichloride	D	A	A	A	E
Piperidine	D	A	D	E	D
Polyvinyl Acetate Emulsion	E	A	E	E	E
Potassium Acetate (aq)	B	A	D	E	D
Potassium Chloride (aq)	A	A	A	A	A
Potassium Cyanide (aq)	A	A	A	A	A
Potassium Nitrate (aq)	A	A	A	A	A

FLUID	Buna	EPDM	Viton®	PTFE	Silicone
i-Propyl Acetate	D	B	D	E	D
Propyl Nitrate	D	B	D	E	D
Propylene	D	D	A	A	D
Pyridine	D	B	D	E	D
Salicylic Acid	B	A	A	E	E
Silicone Oils	A	A	A	A	C
Soap Solutions	A	A	A	A	A
Sodium Acetate (aq)	B	A	D	E	D
Sodium Bicarbonate (aq) (baking soda)	A	A	A	A	A
Sodium Borate (aq)	A	A	A	A	A
Sodium Chloride (aq)	A	A	A	A	A
Sodium Hydroxide (aq)	B	A	B	A	B
Sodium Nitrate (aq)	B	A	E	E	D
Sodium Peroxide (aq)	B	A	A	E	D
Soybean Oil	A	C	A	A	A
Steam, under 300°F	D	A	D	A	C
Stearic Acid	B	B	E	A	B
Stoddard Solvent	A	D	A	A	D
Sulfur Chloride (aq)	C	D	A	B	C
Sulfuric Acid (dilute)	C	B	A	E	D
Sulfurous Acid	B	B	A	A	D
Tannic Acid	A	A	A	A	B
Tartaric Acid	A	B	A	A	A
Tetrachloroethylene	D	D	A	A	D
Toluene	D	D	A	A	D
Triethanol Amine	B	A	D	A	E
Trioctyl Phosphate	D	A	B	E	C
Tung Oil (China Wood Oil)	A	C	A	A	D
Turpentine	A	D	A	A	D
Vegetable Oils	A	C	A	A	B
Vinegar	B	A	A	A	A
Whiskey, Wines	A	A	A	A	A
White Pine Oil	B	D	A	E	D
Zinc Chloride (aq)	A	A	A	A	A

INFORMATION COMPILED FROM NEWMAN GASKETS WEBSITE, WWW.NEWMANGASKET.COM

S.T.A.M.P.E.D.

Questions to Ask		
	S	Size
	T	Temperature
	A	Application
	M	Media
	P	Pressure
	E	Ends
	D	Dixon

Measurement Information

Measures of Pressure

1 Pound Per Square Inch = 144 Pounds Per Square Foot = 0.068 Atmosphere = 2.042 Inches of Mercury at 68°F =27.7 Inches of Water at 62°F = 2.31 Feet of Water at 68°F.

1 Atmosphere = 30 Inches of Mercury at 62°F = 14.7 Pounds Per Square Inch = 2116.3 Pounds Per Square Foot = 33.95 Feet of Water at 68°F.

1 Foot of Water at 68°F = 62.355 Pounds Per Square Foot = 0.433 Pounds Per Square Inch.

1 Inch of Mercury at 68°F = 1.132 Feet of Water = 13.58 Inches of Water = 0.491 Pounds Per Square Inch.

Column of Water 12 Inches High, 1 Inch in Diameter = .341 Pounds

Length Conversion Constants

Millimeters x .039370 = Inches
Meters x 39.370 = Inches
Meters x 3.2808 = Feet
Meters x 1.09361 = Yards
Kilometers x 3,280.8 = Feet
Kilometers x .62137 = Statute Mile
Kilometers x .53959 = Nautical Miles

Inches x 25.4 = Millimeters
Inches x .0254 = Meters
Feet x .30480 = Meters
Yards x .91440 = Meters
Feet x .0003048 = Kilometers
Statute Miles x 1.60935 = Kilometers
Nautical Miles x 1.85325 = Kilometers

Mass Conversion Constants

Grams x .03527 = Ounces (Avd.)
Grams x .033818 = Fluid Ounces (Water)
Kilograms x 35.27 = Ounces (Avd.)
Kilograms x 2.20462 = Pounds (Avd.)

Ounces (Avd.) x 28.35 = Grams
Fluid Ounces (Water) x 29.57 = Grams
Ounces (Avd.) x .02835 = Kilograms
Pounds (Avd.) x .45359 = Kilograms

Trademarks

Pyrex® is a registered trademark of Corning Glass.

Tri-Clamp® is a registered trademark of Tri-Clover, Inc.

Viton® is a registered trademark of DuPont Dow Elastomers.

Water Data and Formulas (no losses included)

Water Level (inches)	Gallons per Minute Discharge for a Given Nominal Pipe Diameter (inches)				
	5	6	8	10	12
5	163	---	---	---	---
6	195	285	---	---	---
7	228	334	580	---	---
8	260	380	665	1060	---
9	293	430	750	1190	1660
10	326	476	830	1330	1850
11	360	525	915	1460	2020
12	390	570	1000	1600	2220
13	425	620	1080	1730	2400
14	456	670	1160	1860	2590
15	490	710	1250	2000	2780
16	520	760	1330	2120	2960
17	550	810	1410	2260	3140
18	590	860	1500	2390	3330
19	620	910	1580	2520	3500
20	650	950	1660	2660	3700
21	685	1000	1750	2800	3890
22	720	1050	1830	2920	4060
23	750	1100	1910	3060	4250
24	---	1140	2000	3200	4440

1 gallon water = 231 cubic inches = 8.333 pounds

1 pound of water = 27.7 cubic inches

1 cubic foot water = 7.5 gallons = 62.5 pounds (salt water weighs approximately 64.3 pounds per cubic foot)

Pounds per square inch at bottom of a column of water = height of column in feet x .434

1 miner's inch = 9 to 12 gallons per minute

Horsepower to Raise Water

If pumping liquid other than water, multiply the gallons per minute below by the liquids specific gravity

$$\text{Horsepower} = \frac{\text{gallons per minute x total head in feet}}{3960}$$

Gallons Per Minute through a Pipe

GPM = .0408 x pipe diameter (inches^2) x water velocity (feet/minute)

Weight of Water in a Pipe

Pounds water = pipe length (feet) x pipe diameter (inches^2) x .34

R

Metal Chemistry

Element	C	Mn	P	S	Si	Cr	Ni	Mo
304 [1]	0.08	2.00	0.045	0.030	1.00	18.0-20.0	8.0-10.0	
316L [1]	0.03	2.00	0.045	0.030	1.00	16.0-18.0	10.0-14.0	2.0-3.0
316L BPE [2]	0.03	2.00	0.045	0.05 - 0.17	1.00	16.0-18.0	10.0-14.0	2.0-3.0
CF-8 [3]	0.08	1.50	0.04	0.04	2.00	18.0-21.0	8.0-11.0	
CF-8M [3]	0.08	1.50	0.04	0.04	2.00	18.0-21.0	9.0-12.0	2.0-3.0

[1] AISI specifications for wrought material
[2] ASME BPE 2002
[3] ASTM A743
- Percentages are maximums unless a range is specified

Finish Information

Finish Specifications

Process	RA micro inch	RA micron	ISO designation
150 grit	30 - 35	0.75 - 0.875	N6
150 grit + Electropolish	12 - 20	0.3 - 0.5	
180 grit	20 - 25	0.5 - 0.625	
180 grit + Electropolish	10 - 16	0.25 - 0.4	
240 grit	15 - 20	0.375 - 0.5	N5
240 grit + Electropolish	8 - 12	0.2 - 0.3	
320 grit	8 - 12	0.2 - 0.3	N4
320 grit + Electropolish	6 - 12	0.15 - 0.3	

- Additional improvements to the surface finish require buffing and further electropolishing. The effect of electro polishing is to improve the existing surface by approximately 50%.
- Microinch = 2.54×10^{-8} m
  Micron = 1.0×10^{-6} m

Finish Designations for Tubing and Fittings

Finish Number	Finish Conditions
1	Mill Finish (bright annealed, pickled, sand blast or tumbled)
3	Polished 180 grit inside diameter (ID) only
5	Polished 150 grit outside diameter (OD) only (UK Dairy)
7	Polished 180 grit outside/inside diameter (OD/ID)
3A	Polished 150 grit outside (OD), 180 grit inside diameter (ID)

- 180 grit = 25Ra microinch = 0.5Ra micron (minimum)

3-A marking

Note: Dixon tubing meets 3A Sanitary Standards for Polished Metal Tubing for Milk and Milk products 33-01.

Valve Seat Materials

Butterfly Valve Elastomer Information

Property	EPDM	Silicone	Viton® (FKM)
tensile strength	good-excellent	good	good-excellent
electrical properties	excellent	excellent	good
weather resistance	excellent	excellent	excellent
heat resistance *	excellent (275° F)	excellent (450°F)	excellent (400° F)
cold resistance *	Good-excellent (-55°F)	excellent (-80°F)	good (-20° F)
steam resistance	good	good	excellent
tear resistance	good	good	good
abrasion resistance	good-excllent	good-excellent	good
acid resistance	good-excellent	good	good
petroleum oil	poor	good	excellent
flame resistance	poor	poor	good
vegetable oil	good (most)	good (intermittent)	excellent

* Temperature information is for elastomer only, not in valve application. EPDM or Viton® are recommended for ozone treated water.

Seat Materials for Ball Valves

Code	Designation	Material	Applications
V	virgin PTFE	virgin polytetrafluoroethylene	100% PTFE. Our standard seat material. Ideal for most sanitary services. Specified for applications requiring a low co-efficient of friction. 3A and FDA approved.
G	RTFE	15% glass reinforced tetrafluoroethylene	15% glass filled = 85% PTFE. Slightly higher temperature and pressure rating than PTFE. Specified for applications requiring higher cycle life than PTFE. 3A and FDA approved.
C	25% carbon PTFE	25% carbon reinforced tetrafluoroethylene	25% carbon + 75% PTFE. Specified for higher temperature pressure applications. Ideal for steam and thermal fluid applications. Higher cycle life than RTFE.
S	SS reinforced PTFE	50% stainless steel filled tetrafluoroethylene	50% SS = 50% PTFE. Specified for higher temperature pressure applications in a sanitary process. 3A and FDA approved.
U	UHMW	ultra high molecular weight polyethylene	Specified for its low modulus of abrasion and minimal property degradation when exposed to moderate levels of radiation. Ideal for applications where fluorocarbons are not acceptable.3A and FDA approved.

All fittings Comply with ASME BPE-2009 - Table DT-5-1 Final Tolerances for Mechanically Polished Fittings and Process Components (inches)

Nominal Size	O.D.	Wall Thickness	Squareness Face to Tangent	Off Angle	Tolerance on End-to-End & Centre-to-End	Off Plane
1/2"	±0.005	+0.005/-0.008	0.005	0.014	0.050	0.030
3/4"	±0.005	+0.005/-0.008	0.005	0.018	0.050	0.030
1"	±0.005	+0.005/-0.008	0.008	0.025	0.050	0.030
1 1/2"	±0.008	+0.005/-0.008	0.008	0.034	0.050	0.050
2"	±0.008	+0.005/-0.008	0.008	0.043	0.050	0.050
2 1/2"	±0.010	+0.005/-0.008	0.010	0.054	0.050	0.050
3"	±0.010	+0.005/-0.008	0.016	0.068	0.050	0.050
4"	±0.015	+0.008/-0.010	0.016	0.086	0.050	0.060

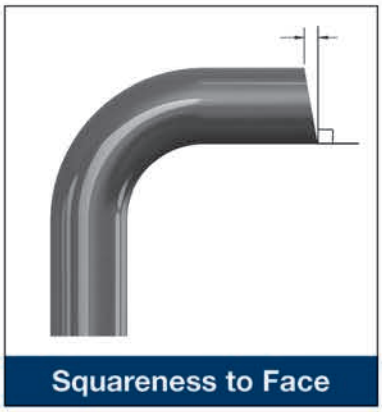
Squareness to Face

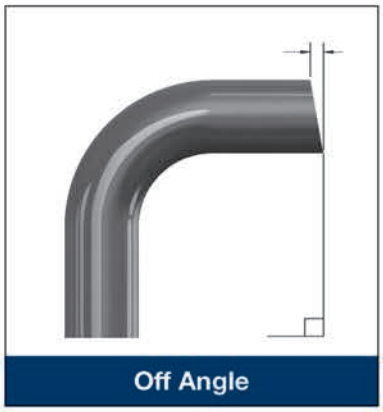
Off Angle


End-to-End

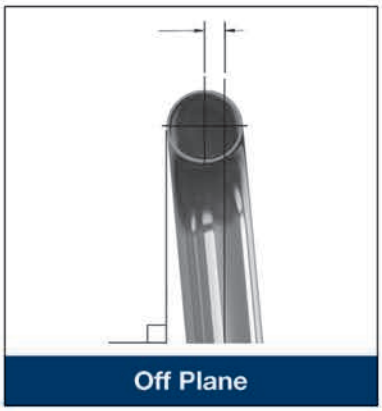
Off Plane


Off Angle


Centre-to-End

R

Weld End chemical analysis (%) per ASME BPE 2009 Table DT-3

Element	C	Mn	P	S	Si	Cr	Ni	Mo
minimum	---	---	---	0.005	---	16.00	10.00	2.00
maximum	0.030	2.00	0.045	0.017	1.00	18.00	15.00	3.00

BPE Surface Finish Requirements

Surface designation	Mechanically Polished ID and OD		Dixon High Purity code
	R_a Maximum		
	ID µ-in.	OD µ-in	
SF0	no finish requirement	no finish requirement	
SF1	20	32	PL
SF2	25	32	
SF3	30	32	
Surface designation	**Mechanically Polished OD and Electropolished ID**		
	R_a Maximum		
	ID µ-in.	OD µ-in	
SF4	15	32	PM
SF5	20	32	
SF6	25	32	

Acceptance Criteria for Stainless Steel and Higher Alloy Mechanically Polished Product Contact Surface Finishes

Anomaly or Indication	Acceptance Criteria
Pits	If diameter <0.020 in. and bottom is shiny [Notes (2) and (4)]. Pits <0.003 in. Diameter are irrelevant and acceptable.
Cluster of pits	No more than 4 pits per each 1/2 in. x 1/2 in. inspection window. The cumulative total of all relevant pits shall not exceed 0.040 in.
Dents	None accepted [Note (1)].
Finishing marks	If R_a max. is met.
Welds	As welded shall meet requirements of MJ-6. If welds are finished, then shall be smooth and blended.
Nicks	None accepted.
Scratches	For tubing, if cumulative length is <12.0 in. per 20 ft tube length or prorated and if depth is <0.003 in. For fittings, valves and other process components, if length is <0.25 in. cumulatively, depth <0.003 in. and R_a max. is met. For vessels, if length <0.50 in. at 0.003 depth and if <3 per inspection window [Note (3)].
Surface cracks	None accepted.
Surface inclusions	If R_a max. is met.
Surface residuals	None accepted, visual inspection
Surface roughness (R_a)	See Table SF-3 (request from Dixon)
Weld slag	For tubing, up to 3 per 20 ft length or prorated, if <75% of the width of the weld bead. For fittings, valves, vessels and other process components, none accepted (as welded shall meet the requirements of MJ-6 and Table MJ-3).
Porosity	None open to the surface.

*Notes:

(1) For Vessels, dents in the area covered by and resulting from welding dimple heat transfer jackets are acceptable.

(2) Black bottom pit of any depth is not acceptable.

(3) An inspection window is defined as an area 4 in. x 4 in.

(4) Pits in super-austenitic and nickel alloys may exceed this value. Acceptance criteria for pit size shall be established by agreement between owner/user and manufacturer. All other pit criteria remain the same.

Packaging

Product markings per ASME BPE 2009 DT-14.1

- DixonTM
- Job number
- 316L
- DixonTM part number
- Heat number(s)
- Surface finish code
- ASME BPE

Per the specification, the size of the fitting may limit the space available for markings. When that occurs, the markings starting at the bottom of the list are not applied. The Dixon part number will describe the part configuration and size.

MTR certifications are included inside the resealable bag with each fitting. The MTRs are traceable through the Job Number found on each fitting. All fittings are capped to prevent damage and contamination.

For easy identification each finish will have a different colour cap.

*Finish	Colour Caps
PL/SF1	blue
PM/SF4	white

* See page 5 for Ra standards

Bradford™ High Purity

BioPharm Fittings

316L Stainless Steel Material Test Report

Job Number	AA158

Bradford™ Part Number	Description	Size	Surface finish
T16W-200PL	BPE auto weld cap Table DT-30	2"	SF1

Chemical analysis (%) per ASME BPE 2009 Table DT-3

Item	Heat number	C	Mn	P	S	Si	Cr	Ni	Mo	
					0.005		16.00	10.00	2.00	min.
		0.030	2.00	0.045	0.017	1.00	18.00	15.00	3.00	max.
M	823310	0.014	1.40	0.034	0.012	0.44	16.30	10.10	2.07	
B	823707	0.014	1.49	0.033	0.010	0.38	16.20	10.10	2.08	

Mechanical Test Results

Item	Yield Strength (0.2%), MPa	Tensile Strength, MPa	Elongation, %	Hardness, HRB	Specification
	170 minimum	485 minimum	35 minimum	90 maximum	
M	378	624	46.1	88	ASTM A269
B	358	586	43.9	83	ASTM A269

Product of Thailand

We certify that the above is a true copy of the test results issued by the material supplier. This MTR conforms to EN10204-3.1. All fittings supplied by Dixon Sanitary conform to the requirements of the European Union Directive 2002/95/EC on the restriction of the use of certain hazardous substances in electrical and electronic equipment (RoHS).

Bruce Anderson
Technical Director

Dixon Sanitary
N25 W23040 Paul Rd.
Pewaukee, WI 53072
USA
800-789-1718
bradfordfittings.com

DIXON
The Right Connection™

R

Identifying Fittings

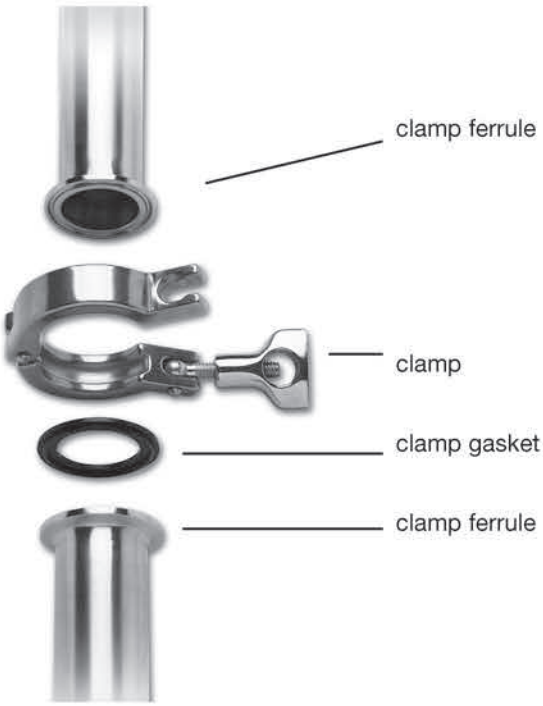

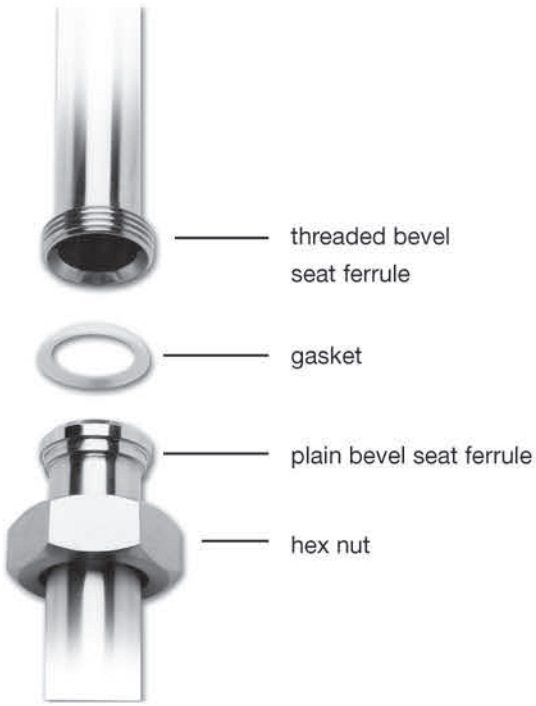

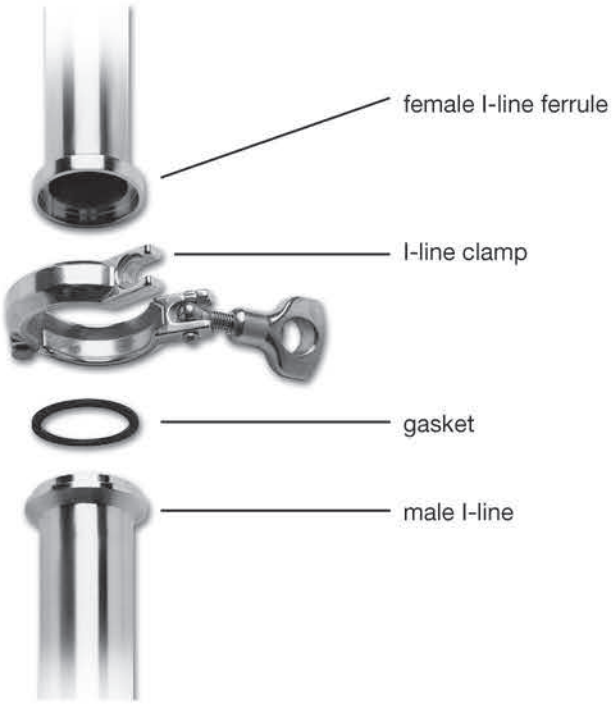

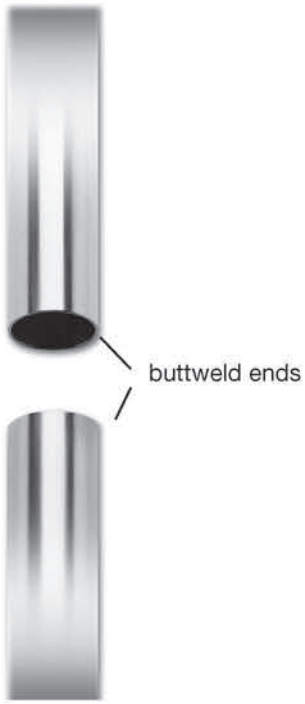

NOTE: Clamp type connections are the most popular and are sometimes referred to as Tri-Clamp connections.

All connections are Tube OD ½" to 12"

Materials are available in 304 and 316L stainless steel, (other alloys can be special order)

R

Clamp Ferrules

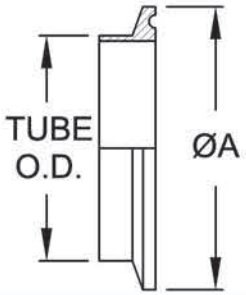

Note: flanges are symmetrical

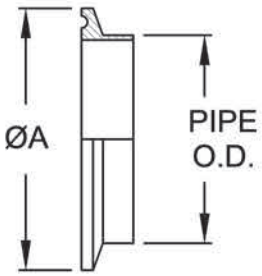

TUBE	
TUBE OD (INCHES)	**ØA**
½	.992
¾	.992
1	1.984
1½	1.984
2	2.516
2½	3.047
3	3.579
4	4.682
5	5.687
6	6.570
8	8.602
10	10.570
12	12.570

PIPE		
PIPE SIZE (INCHES)	**PIPE OD (INCHES)**	**ØA**
1	1.315	1.984
1¼	1.660	2.516
1½	1.900	2.516
2	2.375	3.047
2½	2.875	3.579
3	3.500	4.125
4	4.500	5.125
6	6.625	7.195
8	8.625	9.200

Clamp Connection

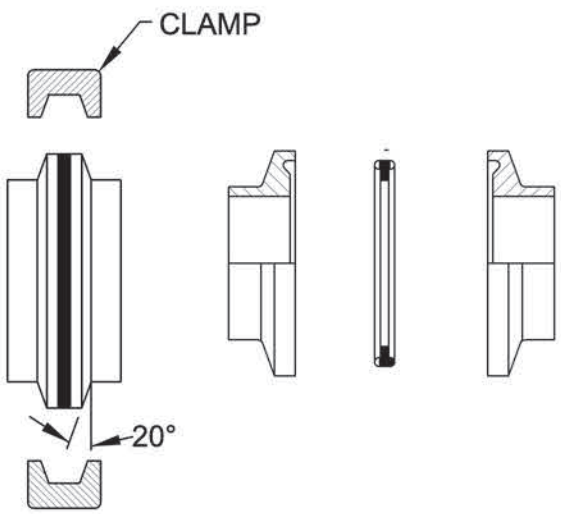

sizes 1" - 12"

sizes ½" and ¾"

Gaskets



Type 1
Standard
½" and ¾"

Type 1
Standard
1" - 12"

Type 2
Flanged
1" - 12"

R

Telephone: **+44 (0)1772 323529**

Email: **sales@dixoneurope.co.uk**

RJT Ferrules

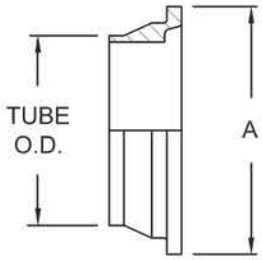

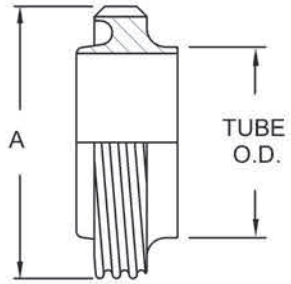

LINERS	
TUBE OD (INCHES)	ØA
1	1.63
1½	2.13
2	2.63
2½	3.13
3	3.63
4	4.63

MALES	
TUBE OD (INCHES)	ØA
1	1.63
1½	2.13
2	2.63
2½	3.13
3	3.63
4	4.63

RJT Hex Nuts

TUBE OD (INCHES)	ØA THREAD ID	B ACROSS FLATS	THREADS PER INCH
1	1.68	2.00	8
1½	2.18	2.56	8
2	2.69	3.12	6
2½	3.19	3.62	6
3	3.69	4.12	6
4	4.69	5.12	6

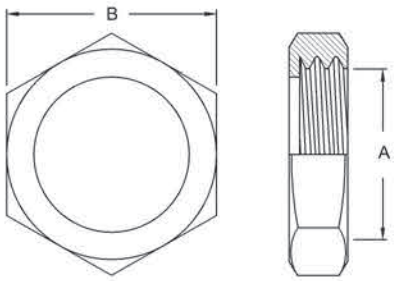

RJT Thread Form

(British Standard Witworth)

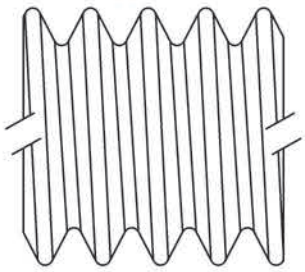

male thread

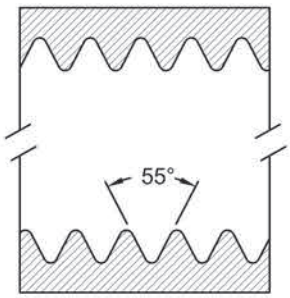

female thread

Gasket



Also known as BSM (British Standard Milk) in Australia modified into Australian CIP Union

DIN 11851 Ferrules

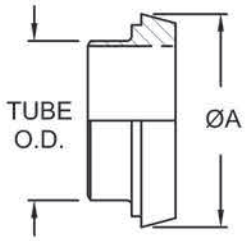

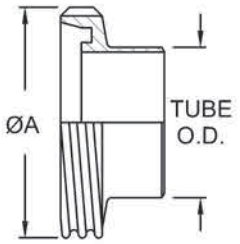

LINERS	
TUBE OD (INCHES)	ØA
1	1.73
1½	2.20
2	2.68
2½	3.39
3	3.94
4	4.76

MALES	
TUBE OD (INCHES)	ØA
1	2.04
1½	2.56
2	3.07
2½	3.74
3	4.31
4	5.10

DIN Round Nuts

TUBE OD (INCHES)	DN	ØA	B THREAD ID	THREADS PER INCH
1	25	2.48	1.88	6
1½	40	3.07	2.39	6
2	50	3.62	2.90	6
2½	65	4.41	3.49	6
3	80	5.00	4.14	4
4	100	5.83	4.94	4

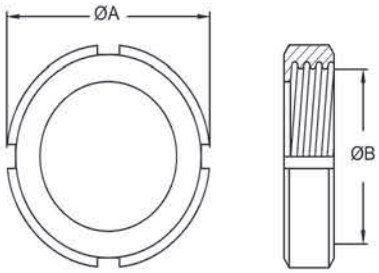

Note: nuts 3" and larger will have 6 slots

DIN Thread Form

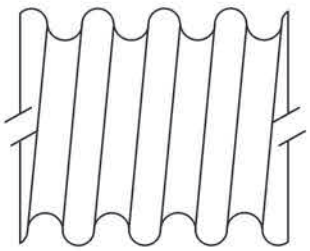

male thread

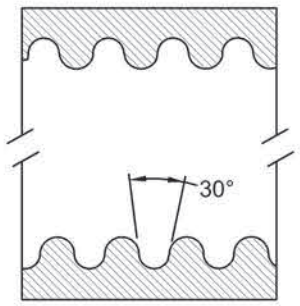

female thread

Gasket



TYPE A TYPE B

DIN 11864-1 Ferrules

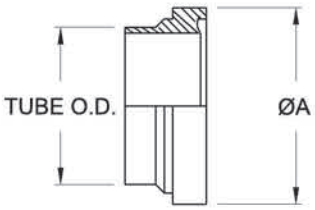

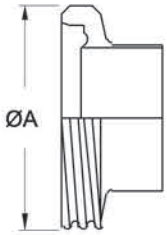

WELD LINER	
TUBE OD (INCHES)	ØA
1	1.69
1½	2.18
2	2.63
2½	3.34
3	3.68
4	4.88

WELD MALES	
TUBE OD (INCHES)	ØA
1	2.04
1½	2.56
2	3.07
2½	3.74
3	4.33
4	5.12

DIN Round Nuts

TUBE OD (INCHES)	DN	ØA	B THREAD ID	THREADS PER INCH
1	25	2.48	1.88	6
1½	40	3.07	2.39	6
2	50	3.62	2.90	6
2½	65	4.41	3.49	6
3	80	5.00	4.14	4
4	100	5.83	4.94	4

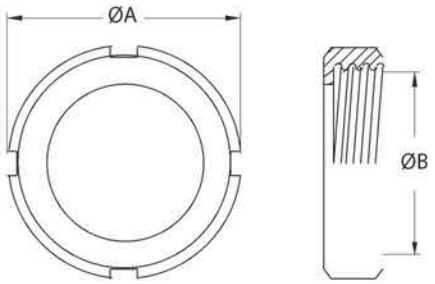

Note: nuts 3" and larger will have 6 slots

DIN 405/1 Thread Form

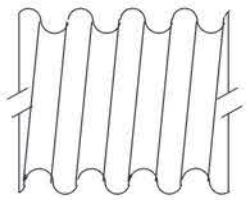

male thread

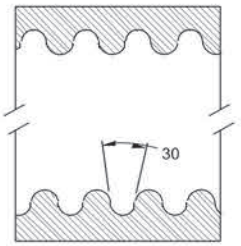

female thread

Gasket



R

IDF/ISO Couplings

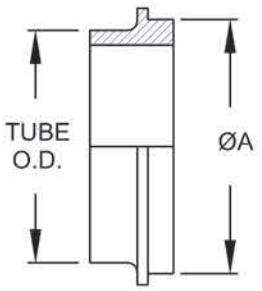

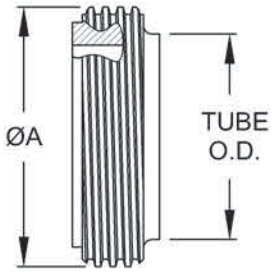

LINERS	
TUBE OD (INCHES)	ØA
1	1.33
1½	1.85
2	2.38
2½	2.91
3	3.44
4	4.75

MALES	
TUBE OD (INCHES)	ØA
1	1.46
1½	1.99
2	2.53
2½	3.06
3	3.59
4	4.96

IDF Hex Nuts

TUBE OD (INCHES)	ØA THREAD ID	B ACROSS FLATS	THREADS PER INCH
1	1.81	1.35	8
1½	2.36	1.88	8
2	2.95	2.42	8
2½	3.54	2.95	8
3	4.13	3.48	8
4	5.24	4.81	6

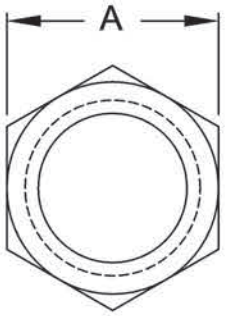

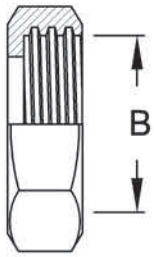

IDF Thread Form

(same as Acme thread form)

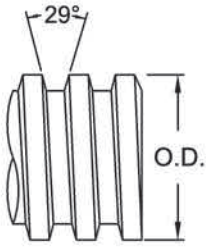

male thread

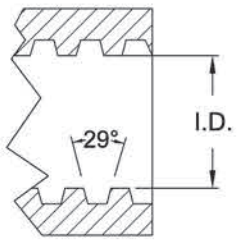

female thread

Gasket



BS4825



ISO

R

Telephone: **+44 (0)1772 323529** Email: **sales@dixoneurope.co.uk**

SMS Ferrules

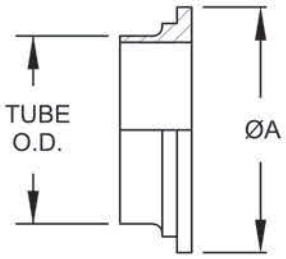

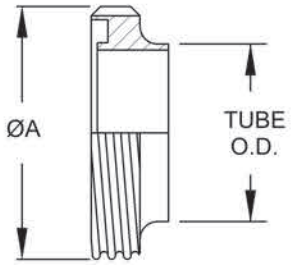

WELD LINER	
TUBE OD (INCHES)	ØA
1	1.40
1½	2.17
2	2.56
2½	3.15
3	3.66
4	4.65

MALES	
TUBE OD (INCHES)	ØA
1	1.55
1½	2.34
2	2.74
2½	3.33
3	3.84
4	4.90

Round Nut

All nuts have 6 slots

TUBE OD (INCHES)	ØA THREAD ID	B ACROSS FLATS	THREADS PER INCH
1	1.44	2.01	6
1½	2.22	2.91	6
2	2.62	3.31	6
2½	3.21	3.94	6
3	3.72	4.49	6
4	4.72	5.43	4

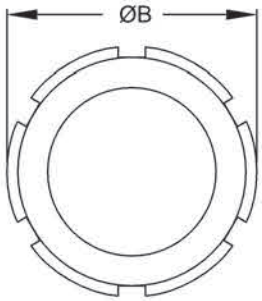

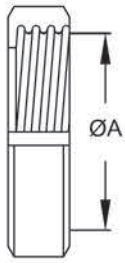

SMS Thread Form

(DIN 405/1)

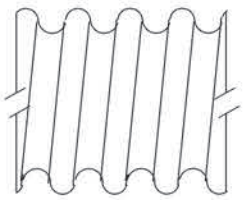

male thread

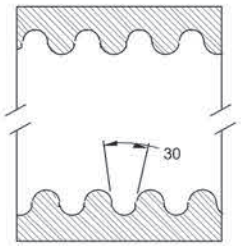

female thread

Gasket



L GASKET



R GASKET

R

Wine Macon Ferrules

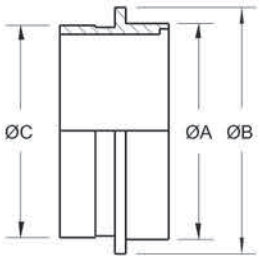

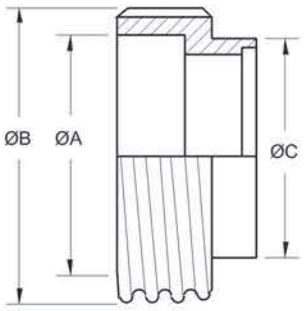

WELD LINER			
SIZE	ØA	ØB	ØC
DN 43	1.823	1.969	1.752
DN 53	2.217	2.461	2.146
DN 63	2.610	2.894	2.539
DN 73	3.004	3.346	2.933
DN 83	3.398	3.780	3.327
DN 103	4.252	4.685	4.114

WELD MALE			
SIZE	ØA	ØB	ØC
DN 43	1.772	M55	1.823
DN 53	2.165	M67	2.228
DN 63	2.598	M79	2.610
DN 73	2.992	M90	3.004
DN 83	3.386	M102	3.280
DN 103	4.173	M125	4.102

Nuts 4-Slots

SIZE	ØA	ØB	ØC	ØD	THREADS PER INCH
DN 43	M55	1.850	2.756	0.984	3"
DN 53	M67	2.244	3.150	0.984	3"
DN 63	M79	2.630	3.740	0.984	3½"
DN 73	M90	3.031	4.173	0.984	3½"
DN 83	M102	3.543	4.646	0.984	4"
DN 103	M125	4.409	5.472	1.024	4"

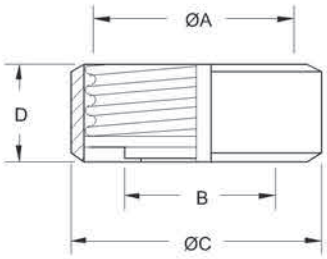

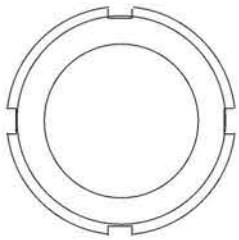

Gasket



Telephone: **+44 (0)1772 323529**
Email: **sales@dixoneurope.co.uk**

Bevel Seat Ferrules

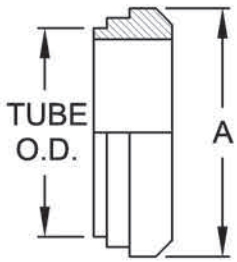

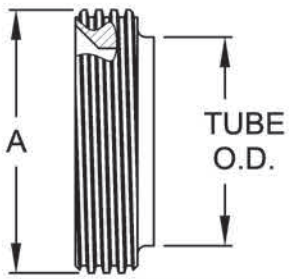

PLAIN	
TUBE OD (INCHES)	ØA
1	1.312
1½	1.848
2	2.380
2½	2.912
3	3.444
4	4.508

THREADED	
TUBE OD (INCHES)	ØA
1	1.462
1½	1.994
2	2.526
2½	3.058
3	3.590
4	4.695

13H Hex Nuts

TUBE OD (INCHES)	ØA THREAD ID	B ACROSS FLATS	THREADS PER INCH
1	1.812	1.362	8
1½	2406	1.894	8
2	3.000	2.426	8
2½	3.594	2.958	8
3	4.188	3.490	8
4	5.438	4.554	6

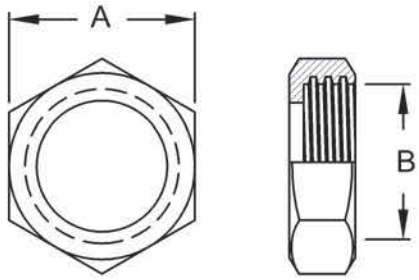

Acme Thread Form

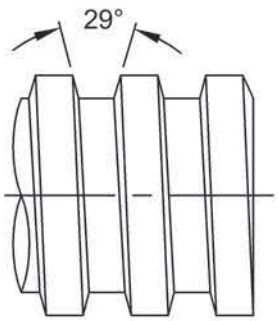

male thread

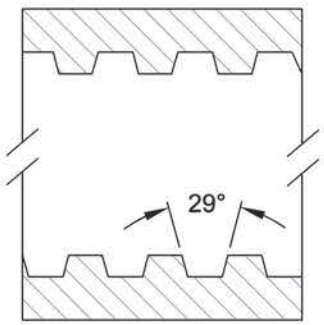

female thread

Gasket



R

John Perry Ferrules

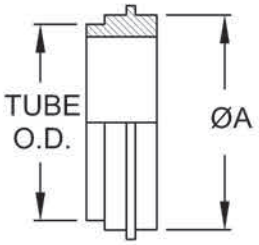

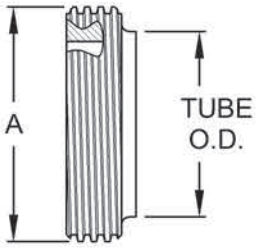

PLAIN	
TUBE OD (INCHES)	ØA
1	1.312
1½	1.848
2	2.380
2½	2.912
3	3.444
4	4.508

THREADED	
TUBE OD (INCHES)	ØA
1	1.462
1½	1.994
2	2.526
2½	3.058
3	3.590
4	4.695

13H Hex Nuts

TUBE OD (INCHES)	ØA THREAD ID	B ACROSS FLATS	THREADS PER INCH
1	1.812	1.362	8
1½	2406	1.894	8
2	3.000	2.426	8
2½	3.594	2.958	8
3	4.188	3.490	8
4	5.438	4.554	6

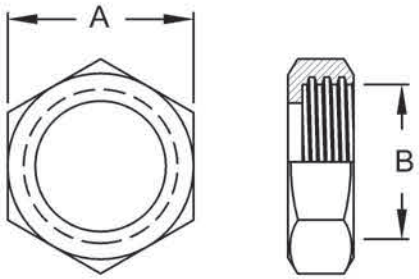

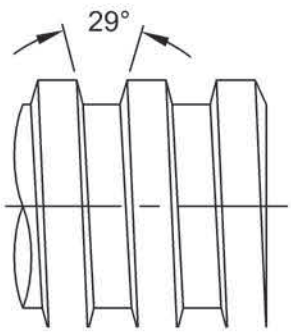

male thread

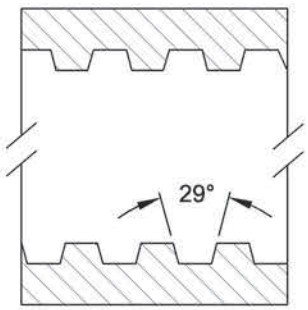

female thread

Gasket



R

Telephone: **+44 (0)1772 323529** Email: **sales@dixoneurope.co.uk**

I-line Ferrules

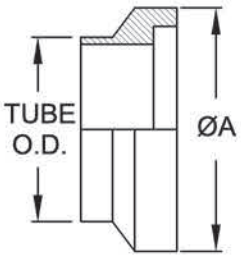

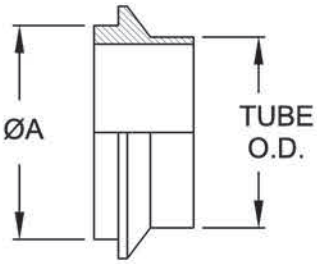

FEMALE	
TUBE OD (INCHES)	ØA
1	1.985
1½	1.985
2	2.640
2½	3.307
3	3.870
4	4.870
6	7.495
8	9.945

MALE	
TUBE OD (INCHES)	ØA
1	1.250
1½	1.740
2	2.240
2½	2.740
3	3.300
4	4.297
6	6.830
8	8.830

Clamp Connection

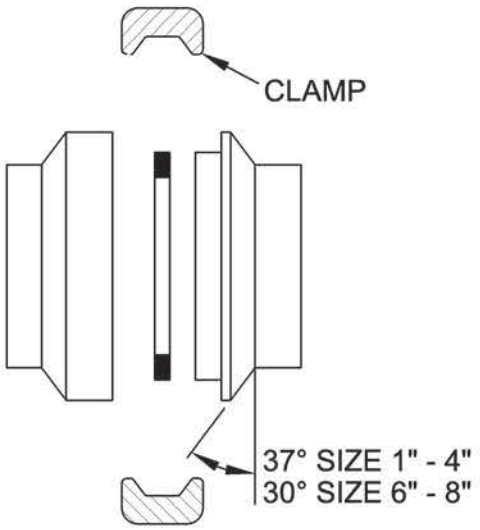

Gasket



R

Q-line Ferrules

Both halves of a jointed connection are symmetrical

TUBE OD (INCHES)	ØA
1	1.985
1½	1.985
2	2.640
2½	3.307
3	3.870
4	4.870

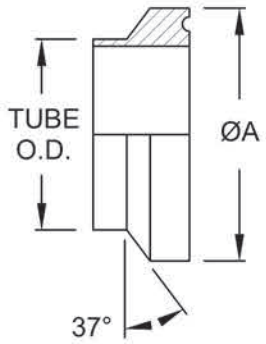

Clamp Connection

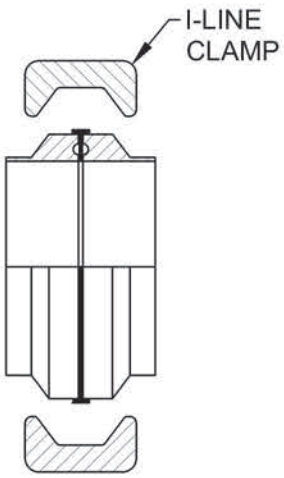

Gasket



R

Telephone: **+44 (0)1772 323529** Email: **sales@dixoneurope.co.uk**

APC Clamped Ferrules

Both halves of a jointed connection are symmetrical

TUBE OD (INCHES)	ØA
1	1.98
1½	1.98
2	2.52
2½	3.05
3	3.58
4	4.68

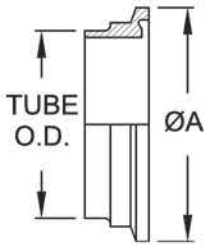

APC Threaded Ferrules

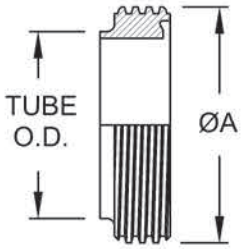

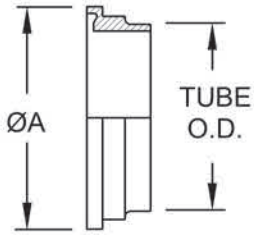

THREADED	
TUBE OD (INCHES)	ØA
1	1.462
1½	1.994
2	2.526
2½	3.058
3	3.590
4	4.695

PLAIN	
TUBE OD (INCHES)	ØA
1	1.312
1½	1.848
2	2.380
2½	2.912
3	3.444
4	4.508

13H Hex Nuts

TUBE OD (INCHES)	A ACROSS FLATS	B THREAD ID	THREADS PER INCH
1	1.812	1.362	8
1½	2406	1.894	8
2	3.000	2.426	8
2½	3.594	2.958	8
3	4.188	3.490	8
4	5.438	4.554	6

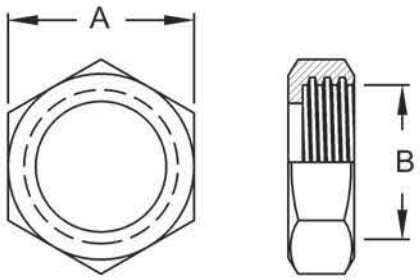

Gasket



Australian CIP Ferrules

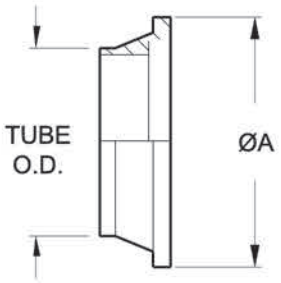

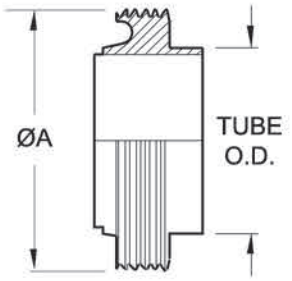

WELD LINER	
TUBE OD (INCHES)	ØA
1	1.73
1½	2.20
2	2.68
2½	3.39
3	3.94
4	4.76

WELD MALES	
TUBE OD (INCHES)	ØA
1	2.04
1½	2.56
2	3.07
2½	3.74
3	4.31
4	5.10

Hex Nut

TUBE OD (INCHES)	DN	ØA	B THREAD ID	THREADS PER INCH
1	25	2.48	1.88	6
1½	40	3.07	2.39	6
2	50	3.62	2.90	6
2½	65	4.41	3.49	6
3	80	5.00	4.14	4
4	100	5.83	4.94	4

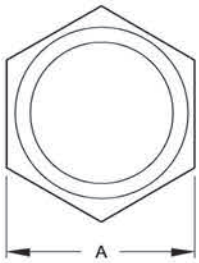

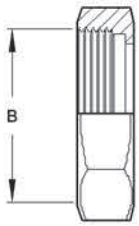

RJT Thread Form

(British Standard Witworth)

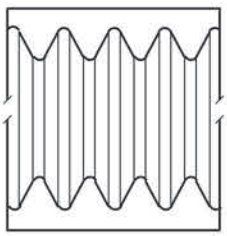

male thread

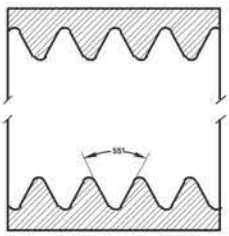

female thread

Gasket



R

Telephone: **+44 (0)1772 323529** Email: **sales@dixoneurope.co.uk**

Australian CIP Flat Face Ferrules

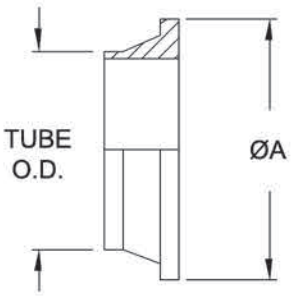

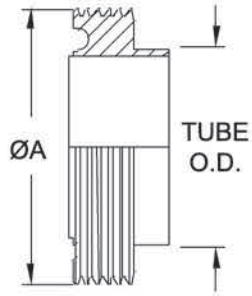

WELD MALES	
TUBE OD (INCHES)	ØA
1	1.73
1½	2.20
2	2.68
2½	3.39
3	3.94
4	4.76

WELD LINERS	
TUBE OD (INCHES)	ØA
1	2.04
1½	2.56
2	3.07
2½	3.74
3	4.31
4	5.10

Hex Nut

TUBE OD (INCHES)	DN	ØA	B THREAD ID	THREADS PER INCH
1	25	2.48	1.88	6
1½	40	3.07	2.39	6
2	50	3.62	2.90	6
2½	65	4.41	3.49	6
3	80	5.00	4.14	4
4	100	5.83	4.94	4

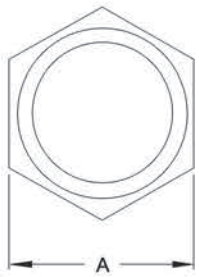

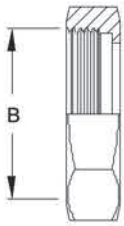

RJT Thread Form

(British Standard Witworth)

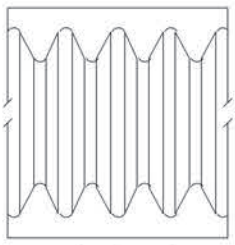

male thread

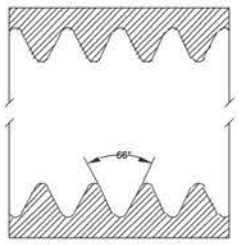

female thread

Gasket



New Zealand CIP Ferrules

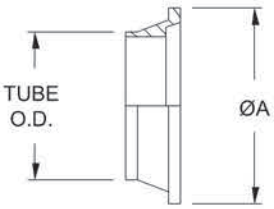

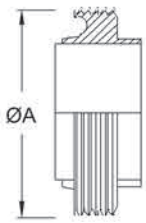

WELD MALES	
TUBE OD (INCHES)	ØA
1	1.75
1½	2.20
2	2.66
2½	3.39
3	3.94
4	4.76

WELD LINERS	
TUBE OD (INCHES)	ØA
1	2.04
1½	2.56
2	3.07
2½	3.74
3	4.31
4	5.10

Hex Nut

TUBE OD (INCHES)	DN	ØA	B THREAD ID	THREADS PER INCH
1	25	2.48	1.88	6
1½	40	3.07	2.39	6
2	50	3.62	2.90	6
2½	65	4.41	3.49	6
3	80	5.00	4.14	4
4	100	5.83	4.84	4

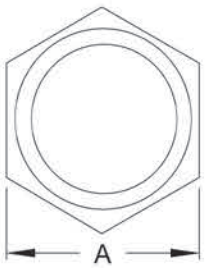

Round Nut

TUBE OD (INCHES)	DN	ØA	B THREAD ID	THREADS PER INCH
1	25	2.48	1.88	6
1½	40	3.07	2.39	6
2	50	3.62	2.90	6
2½	65	4.41	3.49	6
3	80	5.00	4.14	4
4	100	5.83	4.84	4

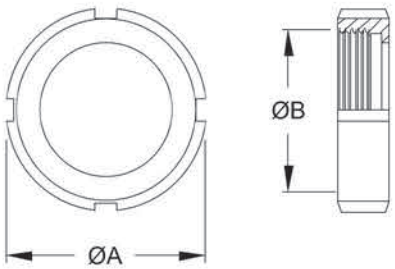

RJT Thread Form

(British Standard Witworth)

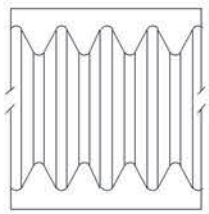

male thread

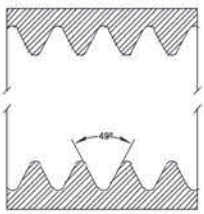

female thread

Gasket



Danish Standard Ferrules

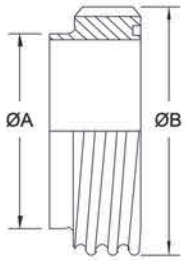

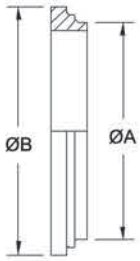

WELD MALE		
SIZE	ØA	ØB
1	1.000	1.732
1½	1.511	2.283
2	2.024	2.835
2½	2.516	3.386
3	3.008	3.937
4	4.018	5.118

WELD LINERS		
SIZE	ØA	ØB
1	1.457	1.496
1½	1.850	1.969
2	2.244	1.969
2½	2.638	2.461
3	3.031	2.461
4	3.543	2.461

Round Nut

SIZE (INCHES)	A	ØB	ØC	THREADS PER INCH
1	0.787	2.244	1.732	6
1½	0.787	2.795	2.283	6
2	0.787	3.386	2.835	6
2½	0.945	4.055	3.386	6
3	0.984	4.528	3.937	6
4	1.102	5.906	5.118	6

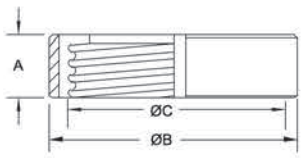

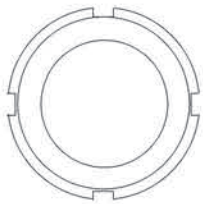

DS Thread Form
(DIN 405/1)

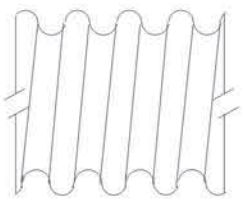

male thread

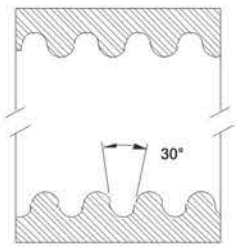

female thread

Gasket



Garolla Fitting

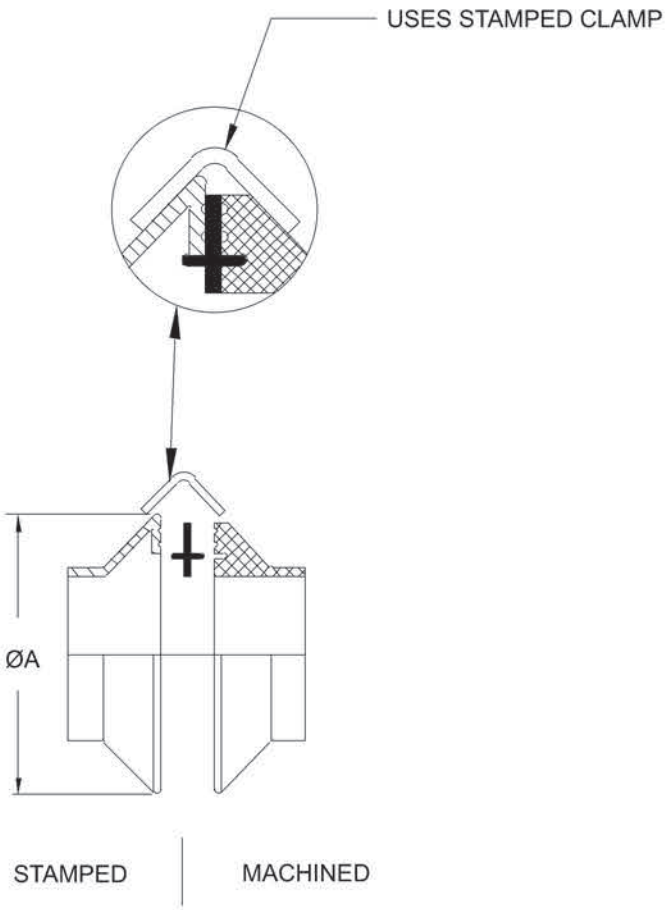

DIN	ØA
40	2.64
50	3.07
60	3.46
70	3.86
80	4.25
100	5.00
120	6.22
150	7.40

Gasket



Oenological Threaded Fittings

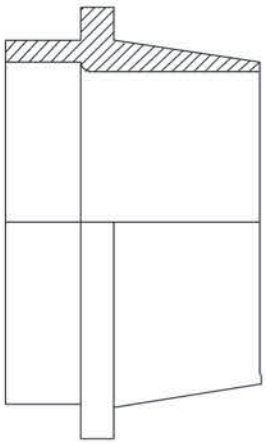

Male End

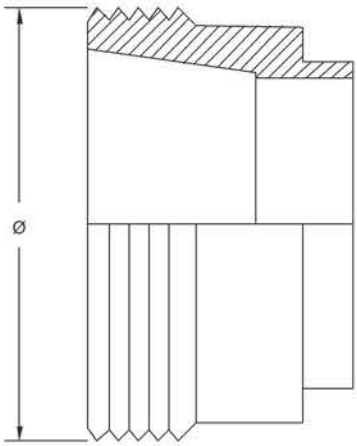

Female End

DIN	ØA
25	1.311
30	1.504
35	1.705
40	2.098
50	2.016

Nut

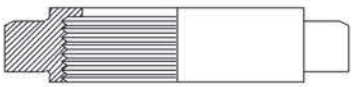

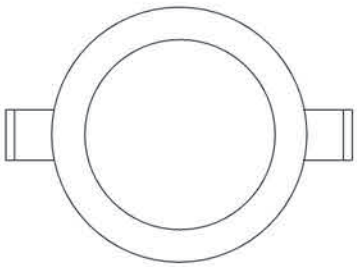

R

Vacuum Flanges

both halves of a jointed connection are symmetrical

CLAMP FERRULE	
TUBE OD (INCHES)	ØA
½	1.18
¾	1.18
1	1.57
1½	2.16
2	2.95

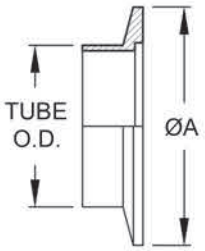

Clamp Connection

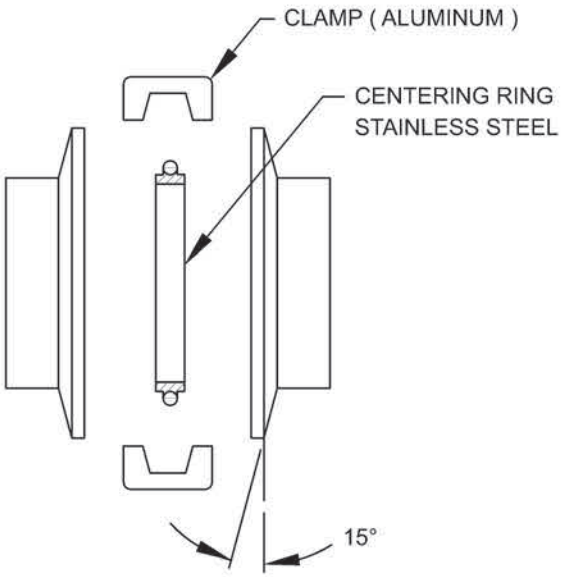

Gasket



Valve Actuation Questionnaire Checklist

Contact Name: _____ Company Name: _____

Date _____ Phone # _____ Fax # _____ Email _____

Project Name: _____

Butterfly Valves

System Media & Pressure
System Temperature
Quantity Size

Seat Material:

☐ Silicone ☐ EPDM ☐ Viton®

End Connections:

☐ RJT ☐ DIN ☐ IDF ☐ SMS
☐ Clamp ☐ Buttweld ☐ 150 # flg ☐ NPT
☐ BSPT ☐ BSPP

Male/Female configuration if applicable: _____ x _____

Pneumatic Actuation

Operation:

☐ double acting ☐ spring return (fail close)
☐ spring return (fail open)

Rotation: **System Pressure (PSI):**

☐ 90° ☐ 180° ☐ 80 ☐ 60 ☐ other

Type:

☐ rack & pinion ☐ vertical canister
☐ horizontal canister

Material: ☐ aluminium ☐ nickel plated ☐ stainless steel

Positioner:

☐ pneumatic (3-15 PSI) ☐ electro-pneumatic (4-20mA)

Gauges:

☐ 0-30 ☐ 0-160 ☐ 0-160 ☐ 0-160
☐ full set

Feedback:

☐ mechanical ☐ prox
☐ 4-20 mA ☐ 4-20 mA & mech (2)

Limit Switches:

☐ SPDT ☐ SPST ☐ DPDT ☐ mechanical
☐ proximity ☐ 2 position ☐ 3 position (no feedback)
☐ 3 position (feedback) ☐ 4-20mA transmitter
☐ 4-20mA transmitter & mech (2)

Visual Indicator:

☐ flat pointer ☐ dome open/close ☐ dome 3-way L
☐ dome 3-way T ☐ dome 4-way L ☐ dome 4-way T

NEMA rating: ☐ 4/4x ☐ 7/9

Solenoid: ☐ 3 way ☐ 4 way ☐ single coil
☐ dual coil

Voltage: ☐ 12VDC ☐ 24VDC ☐ 24VAC
☐ 110VAC ☐ 220VAC

NEMA rating: ☐ 4/4x ☐ 7/9

Ball Valves

System Media & Pressure
System Temperature
Quantity Size

Type:

☐ 2 way ☐ 3 way T ☐ 3 way L ☐ 4 way double L
☐ 4 way T ☐ 4 way L flow conf.

Construction:

☐ sanitary ☐ industrial

Body Material:

☐ stainless steel ☐ brass

Seat Design:

☐ PTFE ☐ UHMW ☐ 15% glass ☐ 25% carbon
☐ 50% stainless

End Connections:

☐ RJT ☐ DIN ☐ IDF ☐ SMS
☐ Clamp ☐ Buttweld ☐ 150 # flg ☐ NPT
☐ BSPT ☐ BSPP

Male/Female configuration if applicable: _____ x _____

Electric Actuation

Operation:

☐ 2 position ☐ spring return (fail close)
☐ spring return (fail open) ☐ modulating controller board

Board Signal:

☐ 1-5V ☐ 2-10V ☐ 4-20mA

Power Supply:

☐ 12VDC ☐ 24VDC ☐ 24VAC ☐ 110VAC
☐ 220VAC 3 phase ☐ 440VAC 3 phase

NEMA rating: ☐ 4/4x ☐ 7/9

Manual Overide: ☐ Yes ☐ No

Accessories:

☐ 2 extra switches ☐ heater (standard)
☐ potentiometer ☐ current position transmitter
☐ torque switches ☐ local control unit
☐ battery backup

Please attach any additional specifications or information, _____ # of pages.

Glossary of Terms

3A Symbol for 3A Sanitary Standards Symbol Administrative Council. The 3A Sanitary Standard were created by the dairy industry as a voluntary benchmark for product performance and sanitary safety. The standard, collaboratively developed by a group of processors, suppliers, regulatory officials and sanitation specialists, is accepted by federal, state and local regulatory authorities. Our products have earned the 3A symbol, through third party verification. This assessment makes certain each product conforms in all respects to the published standards. Dixon is proud to be a participant in the 3A program.

3A Finish Product surface finish equivalent to 150 grit or better OD, and 180 grit or better ID. A maximum of Ra 32 microinch (0.8 micron) is indicated.

ABS (Acrylicnitrile-butadiene-styrene) a thermoplastic resin with an excellent resistance to acids, bases, salts and some solvents. It is heat resistant to 230° F.

ANSI American National Standards Institute, Inc.

ASME American Society of Mechanical Engineers.

ASTM American Society for Testing and Materials.

Acme Thread A flat grooved helical ridge on a nut or bolt. This typically has a 29° included angle. Used on bevel seat, John Perry fittings and IDF.

Anneal Stress relief of stainless steel, a heat treatment to remove the stresses generated in forming and welding operations. This heat treatment is best done under controlled atmosphere or vacuum to maintain the mill finish. The fittings are not quenched, as in solution annealing; this would reintroduce residual stresses. Done correctly, parts are processed to provide minium residual stresses and full corrosion resistance.

Available NPSH (Net positive suction head) A characteristic of the system and is defined as the energy which is in a liquid at the suction connection of the pump (regardless of the type of pump) over and above that energy in the liquid due to its vapor pressure.

Bright Anneal Annealing in a protective medium to prevent discolouration of the surface.

Bright Annealed Finish A silvery satin surface, approximately the mill finish of stainless steel.

Buna Synthetic rubber, a copolymer of acrylonitrile and butadiene.

Burst Pressure The pressure at which rupture occurs.

Cavitation When the NPSH required by the pump is greater than the NPSH available by the system, cavitation occurs. Vapor is formed and moves along with the stream. These vapor bubbles or “cavities” collapse when they reach regions of higher pressure on their way through the pump cavities are forming in the liquid being pumped. When these cavities form at the suction of the pump several things happen all at once.

- Loss in capacity
- Loss of head (pressure)
- The efficiency drops
- The cavities or bubbles will collapse when they pass into the higher regions of pressure causing noise, vibration, and damage to many of the components

CW Clockwise.

CCW Counter clockwise

Glossary of Terms

Clamp A device used to join mechanical parts, fittings, ensuring a quick leak-proof connection and enabling easy take down.

Cold Flow Continued deformation or movement of rubber or PTFE under stress.

Compression Set The deformation that remains in rubber or PTFE after it has been subjected to and released from stress such as a clamp. The longer the stress is maintained the more definitive the deformation.

DIN Deutches Institut für Normung - German National-standards Organisation.

Double-Acting (DA) Pneumatic Actuator Any pneumatic actuator which uses air to drive the actuator output shaft in both the open and close direction. The air supply is piped to one side of a piston-drive or a diaphragm while the air contained on the opposing side is exhausted.

DN Diameter nominal.

DPDT Double pole-double throw, a switch.

Durometer An instrument for measuring the hardness of rubber by resitance to penetration.

Durometer Hardness A numerical value which indicates the resistance to indentation of the blunt indentor of the durometer.

EPDM Ethylene propylene diene monome, a synthetic rubber.

EHEDG European Hygienic Engineering and Design Group

Elastomer Any of various elastic substances resembling rubber.

Electric Actuator An electro-mechanical device used to open and close or modulate a valve. The actuator (which is mounted and coupled to the valve in similar fashion as the pneumatic actuator), operates the valve using an electric motor driving a gear train. While the basic function of the electric actuator is similar to the pneumatic, there are distinct differences in the application and flexibility of the two types, and these differences should be considered to select the proper type.

Electric Failsafe Actuator Electrically driven actuator that contains an internal spring to close the valve on loss of electricity.

Encapsulation The enclosing of material by an encapsulant for protective purposes. In a ball valve the ball is encased in PTFE, preventing the material flowing through the valve from getting behind the ball causing contamination problems.

Fail-Closed Spring return pneumatic actuator is applied to the valve such that the spring will drive the valve to the closed position upon loss of air (may be termed air-to open).

Fail-Open Spring return pneumatic actuator is applied to the valve such that the spring will drive the valve to the open position upon loss of air (may be termed air-to close).

Flow Coefficient (Cv) Cv is defined as the flow rate in U.S. gallons of water (at 60°F) that will pass through the valve in one minute with a differential pressure across the valve of 1 PSI.

Ferrule A bushing used to secure a tube joint. A special bushing designed for welding to the end of tubing. Two ferrules and a gasket make a leak-proof connection when used with the complimentary clamps.

Fitting A small part of an apparatus (may be detachable).

Fluorocarbon Elastomer known as Viton® a registered trademark of DuPont.

Glossary of Terms

Friction loss The part of the total loss that occurs as the fluid flows through straight pipe.

ISO5211 International standard for actuator and valve interface.

IDF International Dairy Federation.

Internal Expansion (IX) A plug (or bullet) is pulled through a stem or a set of blades (fingers) increase the stem I.D. to the plug O.D. or a predetermined setting when using expansion blades (fingers). This forces the stem serrations into the hose tube and the hose cover into the serrations of the ferrule.

Laminar Flow The resistance of flow as a liquid is moved through a pipe due to viscous shear stresses within the liquid and turbulence that occur.

Manual Override Any mechanical device by which an automated valve may be manually operated. On smaller actuators, this may simply be wrench flats on the output shaft of the actuator. Larger actuators may require a more sophisticated system, such as
de-clutchable hand wheels, manual gears, jack screws or hydraulic hand pump over-ride.

Maximum-Shut-Off Pressure (Delta-P) The pressure of the media flowing into the valve against which the valve will have to close.

Media The material flowing through the valve.

Modulating Service Proportional positioning of a valve between the open and closed position. Used for flow control processes.

NAMUR International Standard of Interface for actuator accessories connections.

NEMA Rating National electrical code ratings for electrical component enclosures.

NEMA 4 Weather-proof enclosure suitable for indoor/outdoor applications to protect from windblown dust, rain or hose-directed water.

NEMA 4x Offers the same protection as NEMA 4 with the addition of corrosion resistance.

NEMA 6 Enclosure that may be submerged up to six feet for 30 minutes.

NEMA 7 Enclosure for hazardous locations must be capable of withstanding an internal explosion of gases so as not to ignite an external gas-air mixture.

Net Positive Suction Head Amount of energy in the liquid at the pump datum. It must be defined to have a meaning, as either available or required NPSH.

Neoprene Synthetic rubber, chemically and structurally similar to natural rubber.

Nominal Size A dimensional value assigned for the purpose of convenient designation.

On-Off Service When the valve is being used to start or stop flow by being cycled to the full open or full closed position.

Operating Pressure The pressure at which system functions. Also known as working pressure.

Pneumatic Actuator An air operated mechanical device used to open and close or modulate a valve. The actuator, which is mounted to the valve by a bracket and coupled to the stem, is designed to convert air pressure into mechanical force sufficient to operate the valve.

Glossary of Terms

Polish To make smooth and shiny by rubbing. Fittings may be machine polished to 180 grit finish. Polish is ID, OD, or both per customer request.

Polyproylene A lightweight synthetic plastic.

Pressure The force per unit area applied on a surface in a direction perpendicular to that surface.

Pressure Head Must be considered when a pumping system either begins or terminates in a tank which is under some pressure other than atmospheric. The pressure in such a tank must first be converted to feet of liquid. A vacuum in the suction tank or a positive pressure in the discharge tank must be added to the system head, whereas a positive pressure in the suction tank or vacuum in the discharge tank would be subtracted. The following is a handy formula for converting inches of mercury vacuum into feet of liquid.

$$\text{Vacuum, ft of liquid} = \frac{\text{Vacuum, in. of Hg X 1.13}}{\text{Sp. Gr.}}$$

The above forms of head, namely static, friction, velocity, and pressure, are combined to make up the total system head at any particular flow rate.

PSI Pounds per square inch.

PSIG Pounds per square inch gauge.

PTFE Tetrafluoroethylene, DuPont's PTFE, is a high performance thermo plastic polymer that has excellent dielectric strength, chemical and temperature resistance.

Required NPSH A characteristic of the pump design. It is determined by test or computation and is the energy needed to fill a pump on the suction side and overcome the friction and low losses from the suction connection to that point in the pump at which more energy is added. Required NPSH varies with pump design, pump size and operating conditions and is supplied by the pump manufacturer.

Santoprene A thermoplastic elastomer, a rubber-like material that complies to FDA requirements.

Service Temperature The maximum and minimum temperature of the media.

RJT Ring Joint Type.

Silicone Dimethyl silicone, a synthetic rubber.

Sintering Heat process in which powdered metal particles are heated to near melting point, fusing the metal granules together.

SMS Swedish Metric System.

SPDT Single pole double throw switch.

SPST Single pole single throw switch.

Spring-Return (SR) Pneumatic Actuator Any pneumatic actuator which contains a single coil spring or group of coil springs to oppose the movement of a piston or diaphragm. As air moves the piston or diaphragm the spring is compressed. When the air supply is discontinued and exhausted, the spring extends and drives the piston or diaphragm in the opposite direction. This type of actuator is normally used for applications where it is necessary for the valve to move to the open or close position upon loss of air supply, whether by design or by system failure.

Glossary of Terms

Static Discharge Head The vertical distance in feet between the pump centre line and the point of free discharge or the surface of the liquid in the discharge tank.

Static Head The pressure at any point in a liquid can be thought of as being caused by a vertical column of the liquid which, due to its weight, exerts a pressure equal to the pressure at the point in question. The height of this column is called the “static head” and is expressed in terms of feet of liquid.

Stem Torque The force required at the valve stem to open or close the valve against system pressure and service conditions.

Suction Head Exists when the source of supply is above the centre line of the pump. Thus the static suction head is the vertical distance in feet from the centre line of the pump to the free level of the liquid to be pumped.

Suction Lift Exists when the source of supply is below the centre line of the pump. Thus the static suction lift is the vertical distance in feet from the centre line of the pump to the free level of the liquid to be pumped.

Supply Pressure The plant air supply pressure available to operate a pneumatic actuator (plant air).

Surge Also known as water hammer. A rapid rise or decrease of internal pressure. Surge conditions occur for various reasons, typically, but not limited to: start and stop sequences.

Torque A twisting or turning force. Usually measured in inch pounds (in-lbs) or foot pounds (ft-lbs)/(force through a distance).

Total Dynamic Discharge Head (hd) The static discharge head plus the velocity head at the pump discharge flange plus the total friction head in the discharge line. The total dynamic discharge head, as determined on pump test, is the reading of a gauge at the discharge flange, converted to feet of liquid and corrected to the pump centre line, plus the velocity head at the point of gauge attachment.

Total Dynamic Suction Head (hs) The static suction head plus the velocity head at the pump suction flange minus the total friction head in the suction line. The total dynamic suction head, as determined on pump test, is the reading of the gauge on the suction flange, converted to feet of liquid and corrected to the pump centre line, plus the velocity head at the point of gauge attachment.

Total Dynamic Suction Lift (hs) The static suction lift minus the velocity head at the pump suction flange plus the total friction head in the suction line. The total dynamic suction lift, as determined on pump tests, is the reading of a gauge on the suction flange, converted to feet of liquid and corrected to the pump centre line, minus the velocity head at the point of gauge attachment.

Total Head (H) or Total Dynamic Head The total dynamic discharge head minus the total dynamic suction head or plus the total dynamic suction lift.

TDH = hd + hs (with suction lift)

TDH = hd - hs (with a suction head)

Total Static Head The vertical distance in feet between the free level of the source of supply and the point of free discharge or the free surface of the discharge liquid.

Tube A hollow cylinder especially one that conveys a fluid. For sanitary applications a thin wall is implied.

Tube Fitting A length of tubing formed into a usable shape either welded to an apparatus or welded to ferrules for use in an apparatus.

Glossary of Terms

Tubing A piece or length of tube.

Tumble Polish Surface A uniform finish applied by vibratory equipment to stainless steel, varying from matte grey to bright, depending on media used. This process may cause work hardening on the surfaces.

Turbulent Flow Irregular flow that is characterized by tiny whirlpool regions. The velocity of this fluid is definitely not constant at every point.

Velocity Head (hv) The energy of a liquid as a result of its motion at some velocity V. It is the equivalent head in feet through which the water would have to fall to acquire the same velocity, or in other words, the head necessary to accelerate the water. Velocity head can be calculated from the following formula:

$$H = \frac{V2}{2g}$$

Where g = 32.3 ft/second
V = liquid velocity in feet per second

The velocity head is usually insignificant and can be ignored in most high head systems. However, it can be a large factor and must be considered in low head systems.

WOG Water, Oil, Gas. Pressure rating for valves handling these products. This does not include steam.

Welding Join two (or more) peices of material by applying heat to produce a localized union through fusion across the interface.
For sanitary fittings, a ferrule is attached to the ends of a tube fitting by TIG welding without the addition of filler metal. Tube fittings can then be joined with clamps and gaskets to form parts of a system.

Work (Strain) Hardening An increase in hardness and strength caused by plastic deformation at temperatures below the annealing ranges.

Index

Page #	Page No.
A	
Air Relief Valve	104
APC Clamp Gasket	27
Aseptic Diaphragm Valve	60-94
Aseptic Type Valves	165-174
ASME BPE	49 - 50
B	
Ball Valves	105-112
- 2 Way 3 Piece	106
- 3 Way Encapsulated Hygienic	108
- Automation	110-112
- Encapsulated 2 Way 3 Piece	106-107
- Multi Port 3 Way	109
- Multi Port 4 Way	109
- Non-Encapsulated 2 Way 3 Piece	107
Bevel Seat Fittings	31-35
- End Caps	33
- Ferrules	32-33
- Gaskets	34-35
- Nuts	31
- Wrenches	32
Biopharm Fittings	49-50
Breakaway Coupling	56
Butterfly Valve	113-119
C	
Centrifugal Pump	183
Check Valves	100-104
- Air Blow	103
- Air Relief	104
- Ball	102
- Spring	101
Clamp Accessories	51
Clamp 32676	30
Clamp Ferrule Cross Reference Table	19
Clamp Type BS: 4825 Part 3 Couplings & Gaskets	20-27
- Butt Weld Ferrule	21
- Double Pin Heavy Duty	20
- External Crimp Stem	53
- Gaskets	24
- Hose Tail	22
- Hygienic Bolted	20
- Metal Detectable Gasket	24
- Seal	24
- Short Weld Ferrule	21
- Single Pin Heavy Duty	20
- Single Pin Squeeze	20
- Solid Ferrule Blank Disc	21
CV Valve	159
D	
Dairy Standard - Polished OD	45-46
- Elbows	45
- Reducers	46
- Tees	45
- Y	46
Diaphragm Valve	60-94
DIN 11851/11887 Couplings & Gaskets	10-12
- Blank Cap	10
- Blank Nut	10
- External Crimp Stem	52
- Gasket	12
- Round Nut	10
- Spanner	10
- Weld Liner	11
DIN 11852 Metric Weld Fittings	47-48
E	
Electric Actuation	139-140
Envelope Gasket	27
European Fittings	6
F	
Fabrication & Tubing	205
Filters	185-190
Finish Designations	5
Flanged Gasket	25-26
G	
Gasket	24-29
- Flanged Gasket	25-26
- Envelope Gasket	27
- Sizing Guide	28-29
Glossary	237
H	
High Purity Fittings	49-51
- Auto Weld Ferrules	50
- Elbows	49
- Gaskets	51
- Heavy Duty Clamp	51
- Reducers	50
- Tees	49
Hose Fittings	52-56
- External Crimp Ferrule	53
- External Crimp Stem	56
- Washdown Gun	55
- Safety Clamps BS EN 14420-3:2004	54
- Smooth Tails	54
Hose Assemblies	57-59
I	
IDF BS: 4825 Part 4 Couplings & Gaskets	13-15
- Blank Cap	13
- Expanding Liner	14
- Expanding Male	14
- External Crimp Stem	52
- Hex Nut	13
- Seal/ Gasket	15
- Spanner	13
- Weld Liner	14
- Welding Male	14
M	
Mixproof Valve	175-182
P	
Pipe Hangers	96
Polished Fittings	41-44
- Elbows	41
- Reducers	43-44
- Tees	42-43
Pressure Gauges	97
PTFE Hose	59
Pump	183
Pump Cart	184
R	
Reducers	43-50
RJT BS: 4825	7-9
- Blank Cap	7
- Expanding Liner	8
- External Crimp Stem	52
- O-Ring	9
- Pressed Liner	8
- Spanner	7
- Welding Liner	8
- Welding Male	8
Q	
Quick Disconnect Fittings	36-40
- H-Series	36-37
- HT-Series	38-39
- ST-Series	40
S	
Safety Clamps BS EN 14420-3:2004	55
San-Hygienic Hose	57
San-sil Silicone Hose	58
Sample Valves	191-204
Seat Valve	141-153
- CM Series Control Top	148, 154
- CT Series Control Top	148,154
Sight Glass	95
- End Caps	95
- In Line	95
- Replacement Parts	95
Smooth Tails	54
SMS Unions, Tools & Gaskets	16-18
- Blank Cap	16
- Expanding Liner	17
- Expanding Male	17
- External Crimp Stem	53
- Seal	18
- Spanner	16
- Weld Liner	17
- Welding Male	17
Spanner	7, 10, 13, 16
Spanner - Double Ended	7
Spray Balls	98
Steam Hose	59
Strainers	185-190
Swivels	99
T	
Technical Information	207
Terms & Conditions	245
V	
Valve Automation	120
- Bracket Mounted Microswitches	121
- Postitioners	124-125
- Proximity Sensors	121
- Rack & Pinion	130-138
- Rotary Switch Box	122
- Solenoid Valves	123
- Stainless Steel Actuator	128-129
- Stainless Steel Canister	126-127
W	
Warranty	245
Washdown Gun	56

Dixon Terms & Conditions

Limited Warranty

Dixon Group Europe Ltd (herein called "Dixon") warrants the products described herein, and manufactured by Dixon to be free from defects in material and workmanship for a period of one (1) year from date of shipment by Dixon under normal use and service. It's sole obligation under this warranty being limited to repairing or replacing, as hereinafter provided, at its option any product found to Dixon's satisfaction to be defective upon examination by it, provided that such product shall be returned for inspection to Dixon's factory within three (3) months after discovery of the defect. The repair or replacement of defective products will be made without charge for parts or labour. This warranty shall not apply to: (a) parts or products not manufactured by Dixon, the warranty of such items being limited to the actual warranty extended to Dixon by its supplier; (b) any product that has been subject to abuse, negligence, accident, or misapplication; (c) any product altered or repaired by others than Dixon; and (d) to normal maintenance services and the replacement of service items (such as washers, gaskets and lubricants) made in connection with such services. To the extent permitted by United Kingdom law, this limited warranty shall extend only to the buyer and any other person reasonably expected to use or consume the goods who is injured in person by any breach of the warranty. No action may be brought against Dixon for an alleged breach of warranty unless such action is instituted within one (1) year from the date the cause of action accrues. This limited warranty shall be construed and enforced to the fullest extent allowable by applicable United Kingdom law.

OTHER THAN THE OBLIGATION OF DIXON SET FORTH HEREIN, DIXON DISCLAIMS ALL WARRANTIES, EXPRESS OR IMPLIED, INCLUDING BUT NOT LIMITED TO ANY IMPLIED WARRANTIES OF MERCHANTABILITY OR FITNESS FOR A PARTICULAR PURPOSE, AND ANY OTHER OBLIGATION OR LIABILITY. THE FOREGOING CONSTITUTES DIXON'S SOLE OBLIGATION WITH RESPECT TO DAMAGES, WHETHER DIRECT, INCIDENTAL OR CONSEQUENTIAL, RESULTING FROM THE USE OR PERFORMANCE OF THE PRODUCT.

Some products and sizes may be discontinued when stock is depleted, or may require a minimum quantity for ordering.

Dixon Group Europe Ltd is committed to a policy of continuous development, and as such, the above detailed specification and may be subject to change without notice. Dixon Group Europe Ltd reserves the right to change and modify designs and specification without notice.

Pricing

Dixon will always try to maintain pricing, however, with the fluctuation of material cost we may be forced to change prices. Please be aware pricing is subject to change without notice.

Freight/Postage & Carriage Charges

Postage & carriage charges are at the customer's expense and will be charged at current appropriate rates.

Returns

Dixon will allow its customers to return any product for any reason within 30 days of shipment, provided it is received in a saleable condition. The customer must call to receive a CCR number prior to returning goods to Dixon and shipping will be at the customer's expense, unless it is determined Dixon created the reason for the return.

A re-stocking charge of 25% applies to all returns.

Limits of Liability

This catalogue is intended as a product offering. It is not intended to be a user or technical manual. Information in this catalogue is subject to change without notice. All users and distributors of products sold through this catalogue should contact Dixon with questions of use, compatibility's, coupling procedures and life of product. Dixon's full time engineering and test staff is always available to recommend uses and to assist distributors and users with questions.

Copyright

Copyright© 2012 by Dixon Group Europe Ltd.

All rights reserved. This book is copyrighted material. Use, reproduction or copying of it by anyone other than Dixon is strictly forbidden without its express written consent.


Bradford
Bradford














DIXON SANBREW LITE PN 10
LITE PN 10 BAR
10 BAR / 700mmHg SF 3:1
AL S&D UHMWPE 10 BAR / 700mmHg SF 4:1
ER EN2398 1997 20 BAR SF 3:1
Bradford
DIXON

Dixon Europe

Dixon Deutschland GmbH
Godesberger Strasse 20b
D–53842 Troisdorf–Spich
Germany
Tel: +49 (0)2241 844 06-0
Email: info@dixon-deutschland.de

Dixon Russia
17A Aleksandrovskoy Fermi Prospekt
192174
Saint Petersburg
Russia
Tel: +7 (812) 677 54 47
Email: info@dixonrussia.ru

Dixon France
Parc Des Mardelles
44, rue Maurice de Broglie - Bât A15
93600 Aulnay-Sous-Bois
France
Tel: +33 171 84 10 16
Email: sales@dixonfrance.fr

Dixon Middle East
Executive Suite,
PO Box 121599,
Saif Zone-Sharjah,
United Arab Emirates
Tel: +97 150 636 7399
Email: enquiries@dixonme.com

Dixon Worldwide

Dixon Valve & Coupling Co
800 High Street
Chestertown
MD 21620
USA
Tel: +1 410 778 2000
Email: sales@dixonvalve.com

Dixon Shanghai
Room 801-803
No.3553 North Zhongshan Rd
Putuo District
Shanghai, China
Tel: +86 21 6173 7998
Email: enquiries@dixonvalve.com.cn

Dixon Asia Pacific
PO Box 2491
Regency Park
SA 5942
Australia
Tel: +61 8 8202 6000
Email: enquiries@dixonvalve.com.au

Dixon India
90, Virwani Industrial Estate,
Western Express Highway,
Goregaon East,
Mumbai – 400 063, India
Tel: +91-22-61949494 / 29271152
Email: salesindia@dixonvalve.com.au

Dixon Group Europe Limited
Dixon House, 350 Leach Place,
Walton Summit Centre, Preston PR5 8AS, UK.
Telephone: +44 (0)1772 323529
Fax: +44 (0)1772 314664
Email: sales@dixoneurope.co.uk
www.dixoneurope.co.uk / www.dixoneurope.eu

Stay connected with Dixon on or
www.youtube.com/user/DixonValve

Certificate No. Q 09970

Customer Service: **+44 (0)1772 323529**
Email: **sales@dixoneurope.co.uk**

© 2015 DGEL
Printed in the UK
HYGCAT03