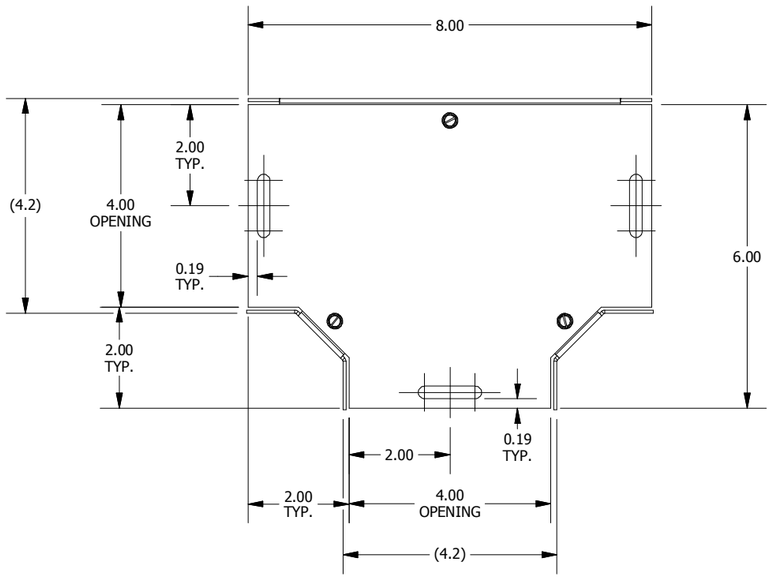

TOP VIEW

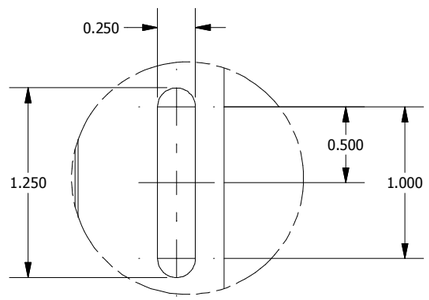

DETAIL A (12 PL.)
(SLOT DETAIL)

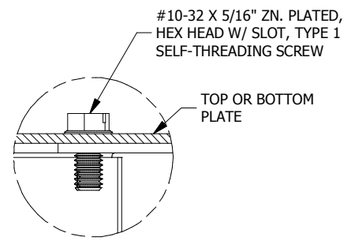

DETAIL B (6 PL.)
(ASSM. DETAIL)

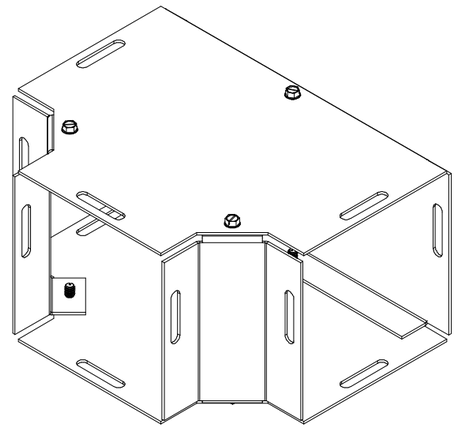

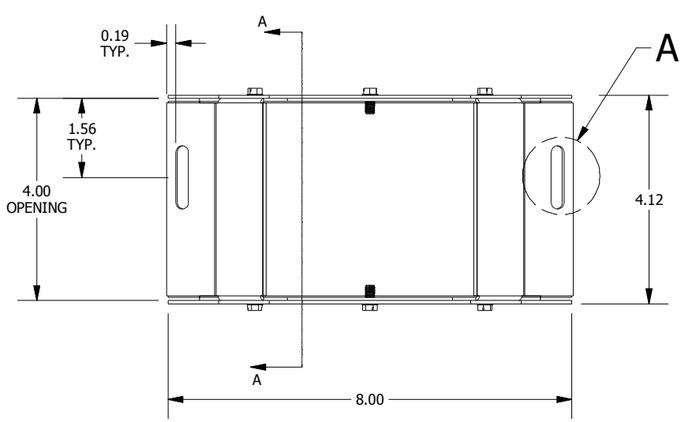

FRONT VIEW

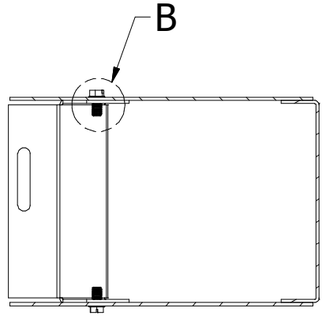

SECTION A-A
(INSIDE VIEW OF SIDE)

PART#: T0404
(DATA SUBJECT TO CHANGE WITHOUT NOTICE)

THIS DRAWING IS PROPERTY OF HUBBELL INC. WIEGMANN
ALL INFORMATION IS PROPRIETARY AND NOT TO BE DUPLICATED